TANDBERG

TR 2055

Service Manual

CONTENTS

Changing and cleaning P/B selectors (switches) . . . . . page 2
Mechanical service . . . . . page 3
FM alignment procedure . . . . . page 4
FM circuit diagrams – Stereo decoder diagram . . . . . page 7
RIAA/input, circuit diagram . . . . . page 9
P/B selector, circuit diagram . . . . . page 9
Power-Amplifier, circuit diagram . . . . . page 11
Pre-Amp/Filter, circuit diagram . . . . . page 12

CHANGING OR CLEANING PUSH BUTTON SWITCHES

Occasionally the push button switches will need to be cleaned and lubricated to maintain trouble free action. A good cleaning agent should be applied sparingly with a fine brush. We recommend "Tandberg Klüberfett" or "Wählerfett" from our Service Department.

Alcohol or methylated spirit may also be used for cleaning and vaseline may be used for lubrication afterwards.

NOTE! Avoid touching the contacts with your finger – it could cause corrosion.

Avoid using cleaning agents that could attack the metal parts.

NOTE! We have developed our own cleaning/lubricating agent, "Tandberg Contact Spray" in aerosols, and we recommend it for all types of contacts. These aerosols can be supplied from our district offices and subsidiary companies.

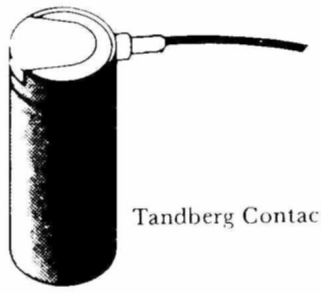

Tandberg Contact Spray

NOTE! Slide switches (mode selectors) are available complete as a replacement part.
If necessary, the switch can be cleaned, and the plunger or the contact unit can be changed. For these operations the switch must be dismantled.

DISMANTLING THE CONTACT CASE/SLIDE CONTACTS

- Unsolder the contact case from the solder side.
- Push the plunger about half way in and move it slightly forwards and backwards and at the same time grip the contact case solder tags with flat-nose pliers (see figure). The back end of the plunger must lie edge to edge with the contact case as shown by * in the figure.
- Pull the contact case out.
- Pull the sliding contact out of the case.

DISMANTLING THE PLUNGER

Remove all four contact cases as described above.

- Move the interlocking plate to the left (seen from the front) to release the plunger, and pull the plunger out. See figure.

DISMANTLING THE PLUNGER

- Pull the spring slightly forward so that the locking clip is free at the edge.
- Use tweezers as shown in the figure.
- Press the plunger right in.

  Push the locking clip backward and lift it up.

  NB! The locking pin lies loose in the locking clip.
- The plunger can be pulled out.

  NB! The spring contacts on the plunger are loose.

  The spring is slightly conical so that if you remove it from the plunger, take care to replace it with the smallest end against front of the plunger.

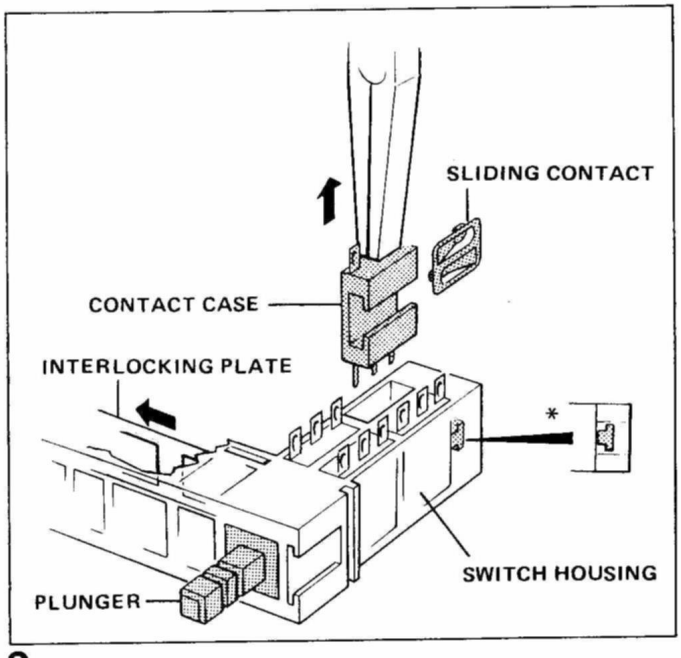

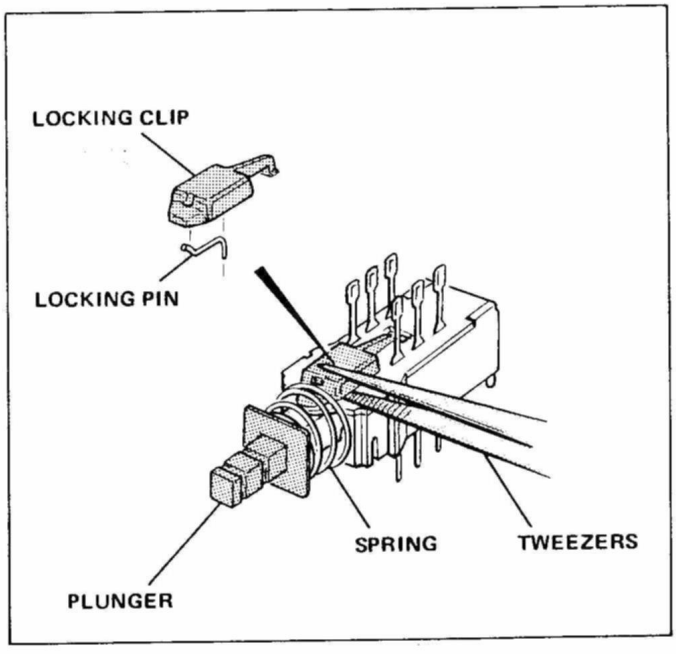

DISMANTLING

CABINET

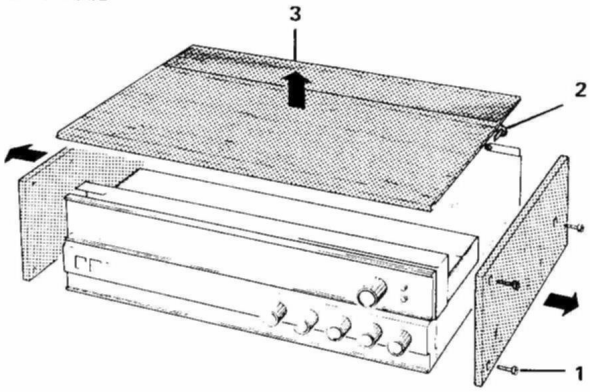

1. Remove the 3 screws from each side panel.
2. Remove the 2 screws from back panel.
3. Lift off the top panel.

RIAA INPUT

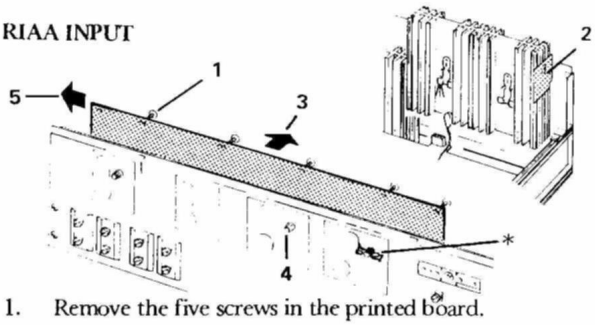

1. Remove the five screws in the printed board.
2. Remove the screw in the small bakelite panel eixed to the heat sink.
3. Pull the board slightly forwards so that the knobs are free from the back panel.
4. Take off the knobs.
5. Pull the board off sideways.

* NOTE! When re-assembling you are advised to tape the knobs securely before the board is screwed into place. See figure.

SCALE COVER/SCALE HOUSING AND METER LAMPS

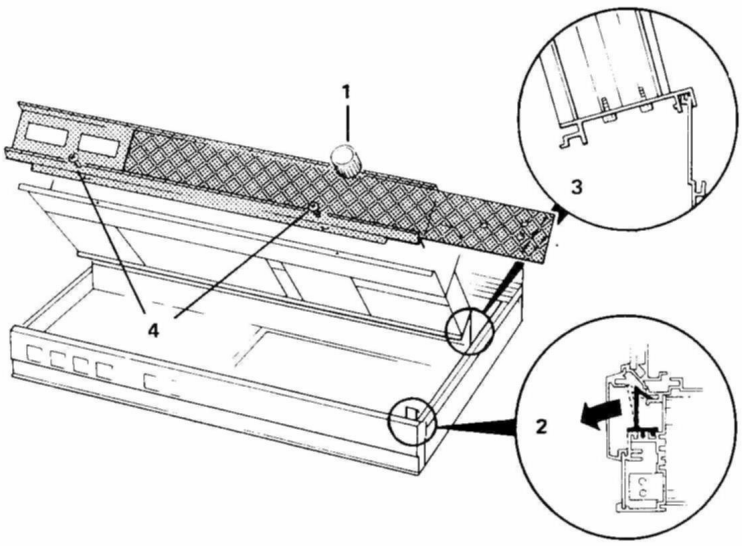

1. Pull off the tuner knob and pull the meter leads away from the FM/IF Tuner board.
2. Push the plastic clip forward so that the tuner unit is set free.
3. Turn the tuner unit up into the vertical position.
4. Remove the 2 screws.
   Pull the scale housing forward.
   The meter lamps are accessible.

THE SCALE

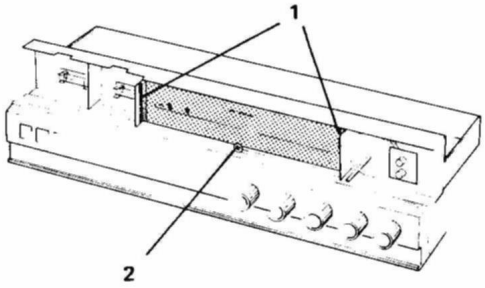

1. Remove the tape from both ends of the scale.
2. Remove the screw.

   Pull off the scale.

SCALE LAMPS

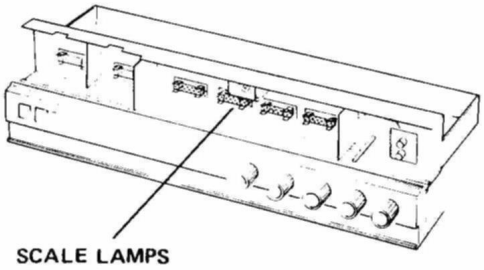

OUTPUT TRANSISTORS

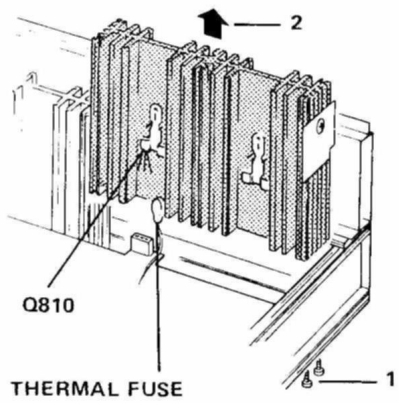

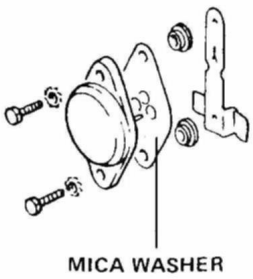

When changing the output transistors you should remove the complete corrugated heat sink for the channel in question.

Remove the bottom cover.

1. Remove the five screws in the heat sink from underneath.
2. Pull the heat sink up.

NOTE! Q 810 will come with the heat sink as it is pulled up, but the **thermal fuse** will remain hanging on the AF board.

NOTE! When assembling the output transistors we recommend to use "**Thermal Compound Wakefield**" on both sides of the mica washer. See figure.

The Compound can be obtained from our Service Departement. Use ordering number: 340245.

We do not recommend the use of "**Silicon grease**". If you must use Silicon grease, do not get it on the solder joints.

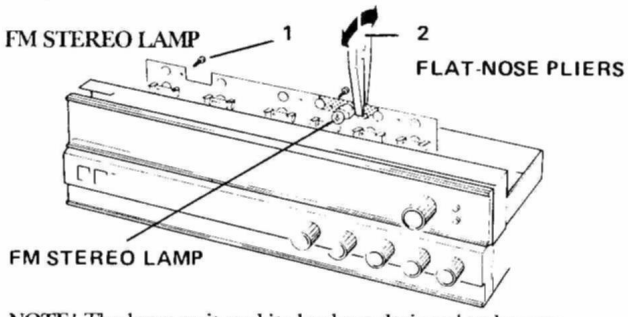

NOTE! The lamp unit and its lead are designed to be separated from the scale lamp board by a snap action.

1. Remove the four screws in the scale lamp board.
2. Loosen the board slightly so that you can insert a pair of flat-nose pliers beside the lamp. See figure.

   The scale lamp board and the stereo lamp board are separetely mounted.
   NOTE! When removing the complete scale lamp board, you must first remove the screws on the IF/FM tuner board.

SCALE DRIVE CORD

Before fitting a new drive cord you should loosen the screws on the tuning pot.meter board and pull off the leads so that the board is free.

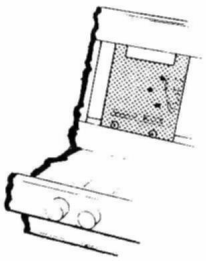

- Turn the pot.meter fully anti-clockwise.
- Pull cord end A through hole C from the back side.

  Pull cord end A until the eyelet on the cord comes out to the front side of hole C.

  Tape the cord securely as shown in the figure.
- Lay cord end B in slot B in the cord wheel, then lay it in the back groove of the cord wheel and take 1 turn **anti-clockwise**. Tape the cord securely as shown in the figure.
- Remove the tape from cord end A and lay the cord in slot A in the cord wheel. Then lay the cord in the front groove of the cord wheel and take 4 turns **clockwise**. Tape the cord again.
- Re-assemble the board and the leads.
- Release the ends of the cord from the tape and complete the fitting of the cord as shown in the figure.
- Assemble the scale pointer as shown in the figure and set to the correct position on the scale.

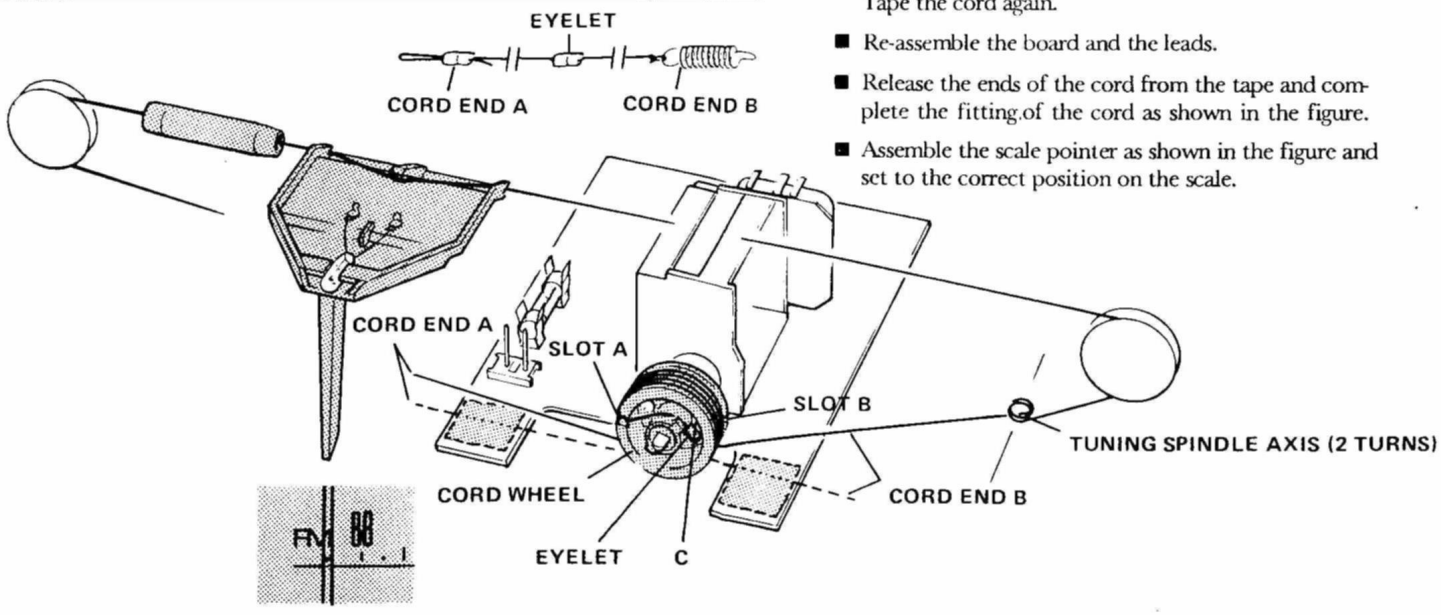

ALIGNMENT OF STEREO-DECODER

Equipment needed:

FM stereo generator
Oscilloscope with sensitivity 5 mV/cm
Frequency counter
Selective voltmeter or a.c. voltmeter and 20 kHz low pass filter.

Complete alignment:

The decoder oscillator: 19 kHz (see paragraph 1).
Channel separation (see paragraph 2).
Muting and stereo/mono switching threshold (see paragraph 3).
Definition: Pilotsignal 19 kHz (± 2 Hz).

---

1. **The decoder oscillator: 19 kHz**

Apply a 1 mV signal from the FM stereo generator, unmodulated. (No pilot signal applied).

Adjust R304 so that the frequency counter connected to M301 indicates 19 kHz.

Alternative method without the frequency counter:

Apply a 1 mV signal from the FM stereo generator, modulation: 10% pilotsignal.

Turn R304 slowly from one extreme to the point where the stereo indicator lights up. Turn further in the same direction until the light goes out. Then turn in the opposite direction to set R304 in the middle of the range where the indicator lights.

2. **Channel separation:**

Apply a 1 mV signal from the FM stereo generator, modulation: 10% pilotsignal. Modulate the right channel with 1 kHz at 30% deviation. Connect the oscilloscope to the TAPE OUT (L) socket.

Adjust R323 to minimum deflection on the scope. Check this adjustment with the 1 kHz signal in the left channel and measure the output of the right channel.

Alternative method without the stereo generator:

Adjust R323 for minimum signal in left (right) speaker when receiving a test FM stereo, transmission with signal in the right (left) channel only.

3. **Muting and stereo/mono switching threshold**

Muting: Apply a 4 µV signal from the FM-generator to the 75 ohm antenna input. Adjust the TUNING METER on the radio to center. Set R231 in the middle position and R229 fully clockwise (seen from component side). Turn R229 slowly counterclockwise until the signal is recovered.

Stereo/mono switching threshold: Set R231 fully counter clockwise (seen from component side).

Apply 0 µV from the FM stereo generator to the 75 ohm antenna input modulated with 10% pilot signal.

Increase the signal from the FM-stereo generator from 0 µV to 10 µV. Turn R231 slowly clockwise until the stereo-indicator light comes on.

FM-alignment procedure

Step	Alignment procedure	Receiver	G	
		Frequency	Frequency	D
1 A	25V for varicap			
1 B	FM - osc.	90 MHz 105 MHz	90 MHz 105 MHz	±
2	Aerial circuit	90 MHz 105 MHz	90 MHz 105 MHz	±
3	FM - IF	90 MHz	90 MHz	±
4	Discriminator	90 MHz	90 MHz	±
5	Center tuning meter	90 MHz	90 MHz	±
6 A / 6 B	Signal meter	90 MHz	90 MHz	

NOTE! The adjustments for muting and stereo/mono switching threshold interact.

Alternative method: Stereo/mono switching threshold.

If an FM-stereo generator is not available an ordinary FM-generator can be used for this adjustment.
Apply a 10 µV signal from the generator to the 75 ohm antenna input, modulated with 19 kHz, deviation 7.5 kHz (10%) (check the modulation frequency with a counter).
Proceed as explained above.

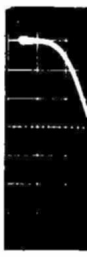

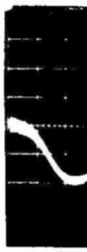

Generator M		Oscilloscope (M)	Circuits		
Deviation	Applied to	Connected to	Adjust	Board No.	Notes
			R616	A6	Meter connected to M13. A6 side 9. Adjust to 25V DC reading.
± 22.5 kHz	* M 1	**M 4 via diode-probe. Fig.3	R204	A2	Check the position of the scale cursor (see Fig.4).
			C118	A1	Check 95MHz and 100MHz.
± 200 kHz	* M 1	**M 4 via diode-probe. Fig.3	L101-L102-L103 C103-C107-C110	A1	Adjust for max. curve height (see Fig.1).
± 200 kHz	* M 1	**M 4 via diode-probe. Fig.3	L106-L107	A1	Adjust for max. curve height and symmetry (see Fig. 1) FM - IF 10.6 - 10.8 MHz.
± 75 kHz	*M 1 1 mV/75 ohm		L201-L202	A2	Dist./voltm. connected to M5, TAPE OUTPUT socket: Adjust L201 for max. output voltage. Aftewards adjust L202 for min. output voltage and min. distortio
		*** M5 viaFig.3			See Fig.2.
± 75 kHz	*M 1 1mV/75 ohm		R239	A2	Adjust for center position of the pointer. When the receiver is tuned to min. distortion. See step 4.
± 0 kHz	No signal		R236	A2	Adjust to 0, on SIGNAL METER
	*M1,1mV/75ohm		R232		Adjust to 20, on SIGNAL METER

* Antenne input.
** See FM-IF Section (A2) side 7.
*** See Audio Section 1 (A5) side 9.

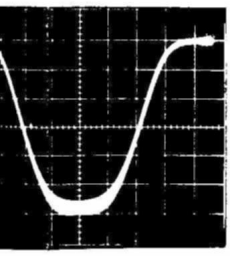

Fig. 1. **FM-IF curve.**

Signal: U_{in} = 150 µV/75 ohms, f = 90 MHz.
Dev. = ± 200 kHz applied to M1 via ant. plug.

Oscilloscope: Vert.: 5 mV/dev., Hor.: 50 kHz/dev. connected to M4 via diodeprobe (Fig. 3).

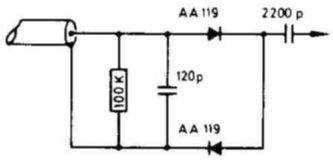

Fig. 3. **Diodeprobe.**

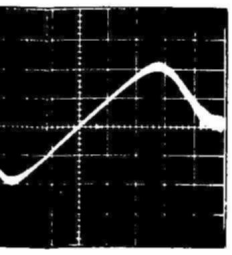

Fig. 2. **Discriminator.**

Signal: U_{in} = 2 µV/75 ohms, f = 90 MHz.
Dev. = ± 200 kHz applied to M1 via ant. plug.

Oscilloscope: Vert.: 0.2 µV/dev. Hor.: 50 kHz/dev. connected to M6.

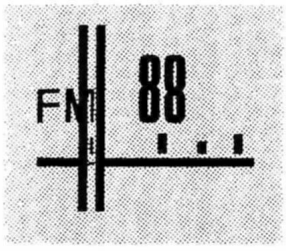

Fig. 4. **The end position of the scale cursor**

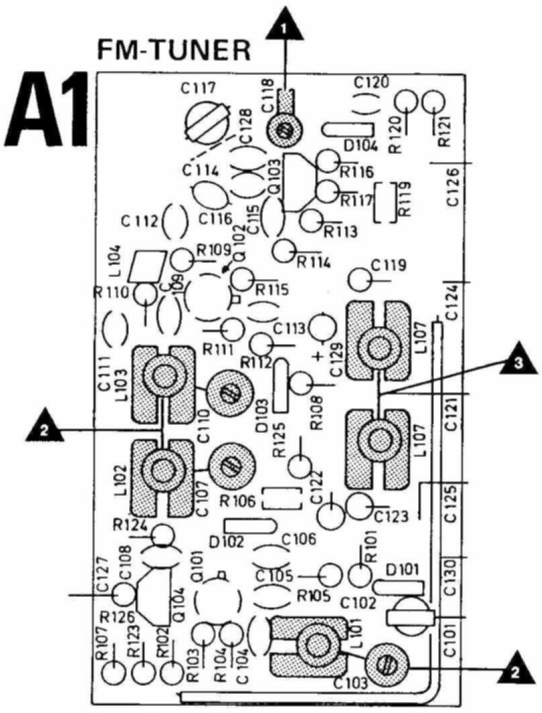

Seen from the component side.

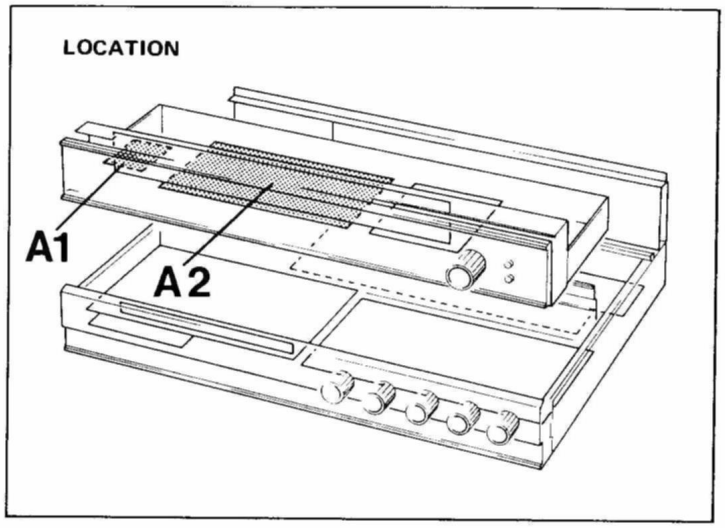

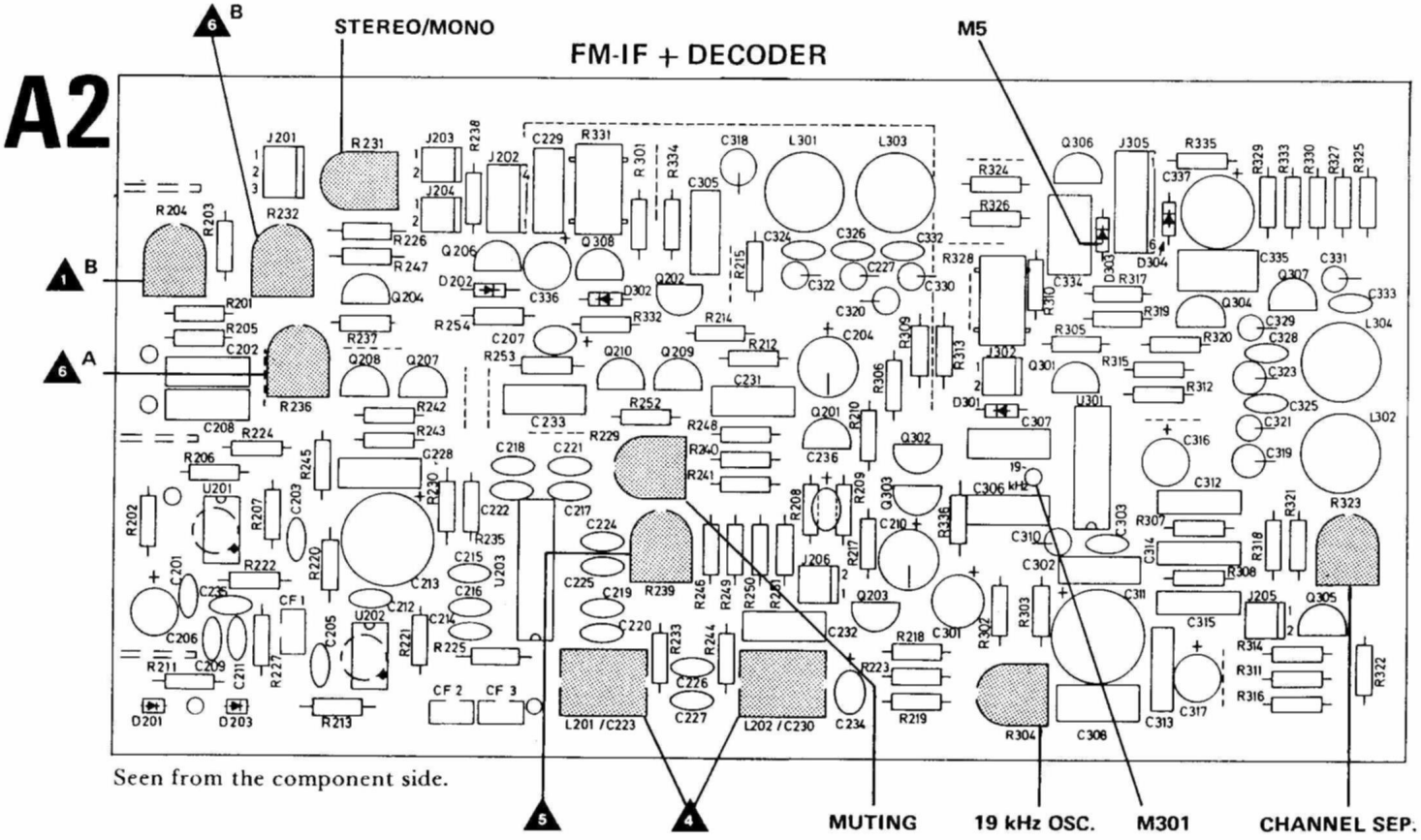

Seen from the component side.

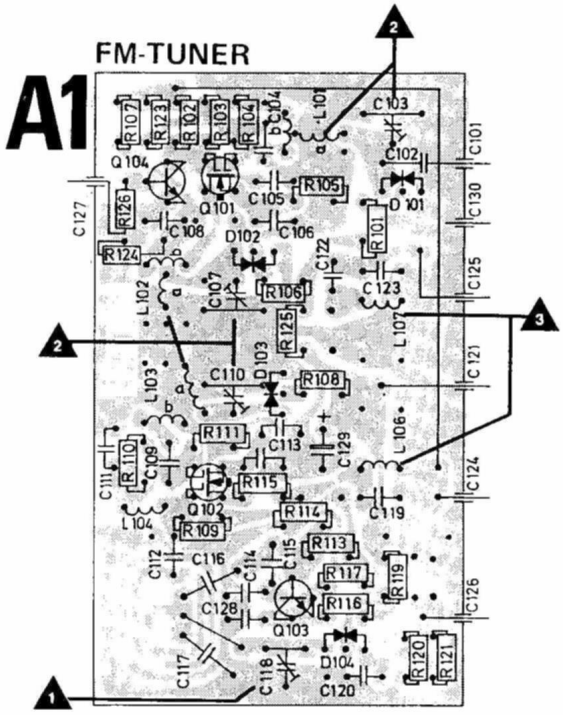

Seen from the solder side.

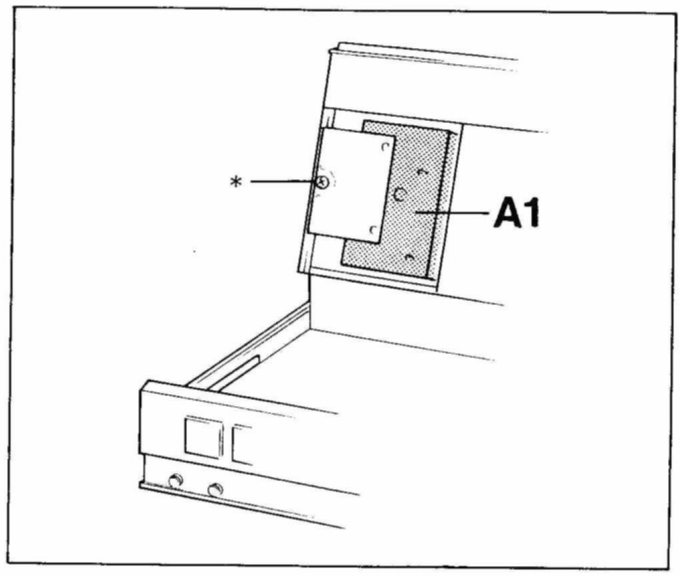

FAULT FINDING ON THE FM TUNER

Turn the tuner unit up into the vertical position.

* Remove the screw shown in the figure.

Remove the cover

The transistors are seen from underneath

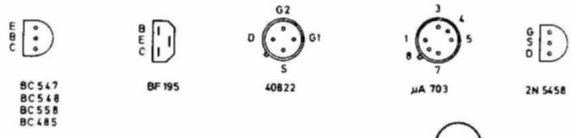

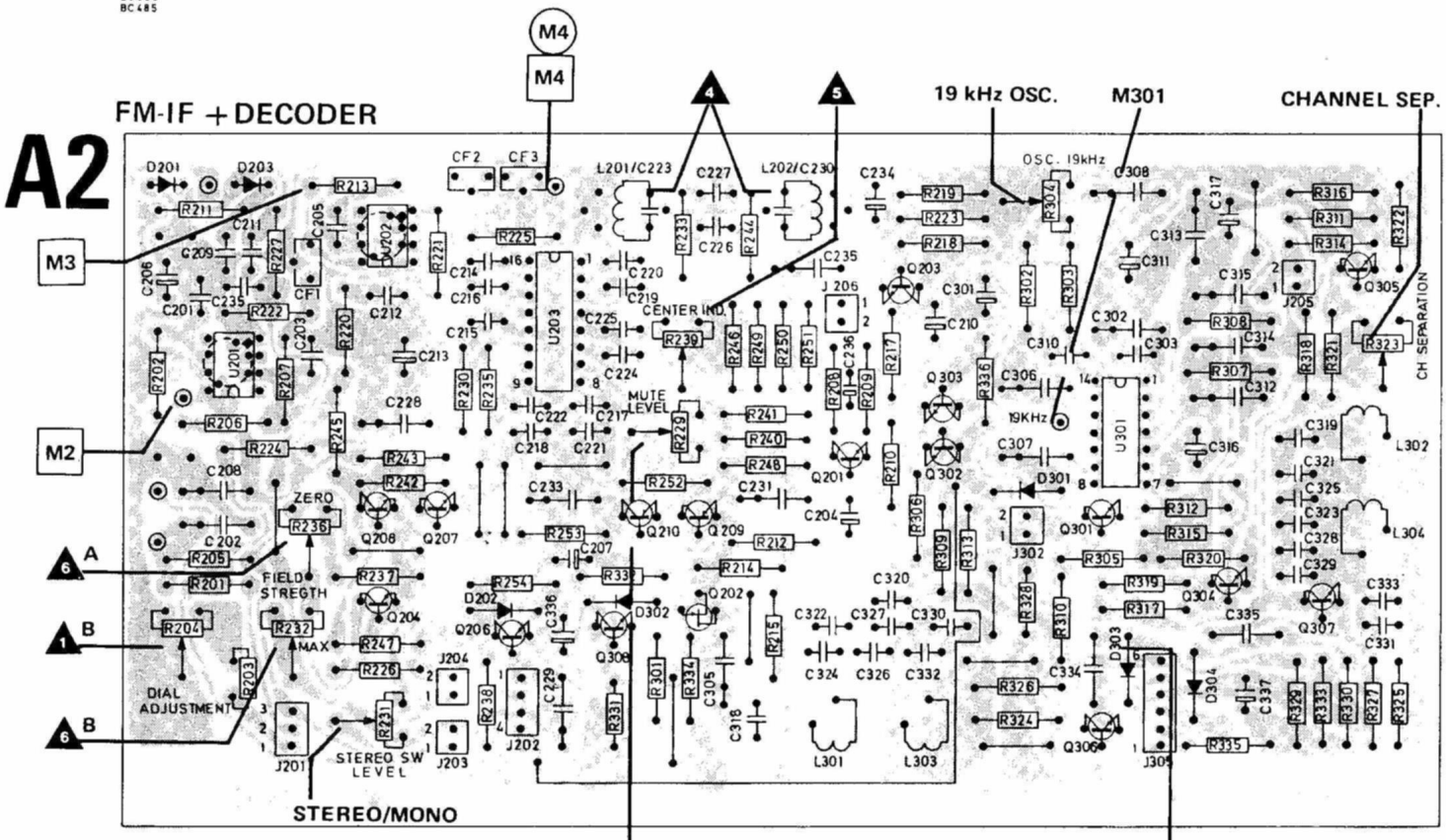

Seen from the solder side.

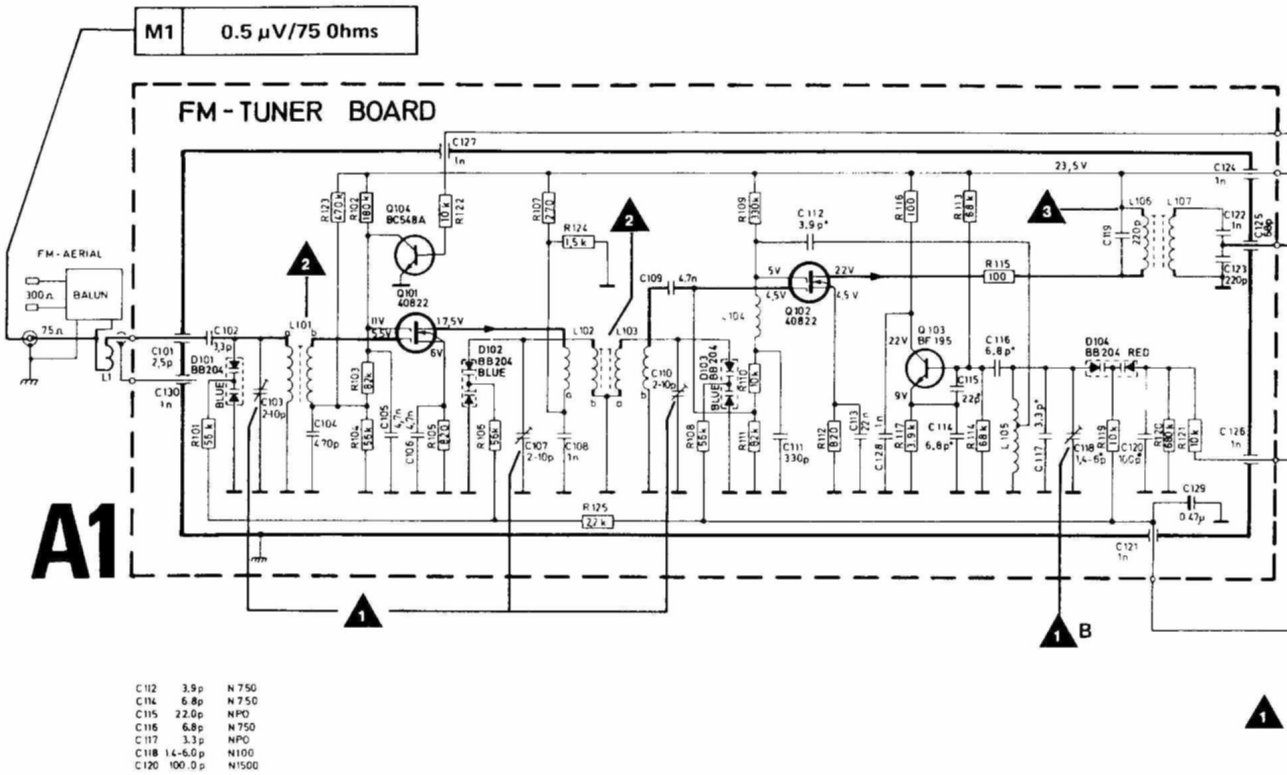

C112	3.9 p	N 750
C114	6.8 p	N 750
C115	22.0 p	NPO
C116	6.8 p	N 750
C117	3.3 p	NPO
C118	1.4-6.0 p	N100
C120	100.0 p	N1500

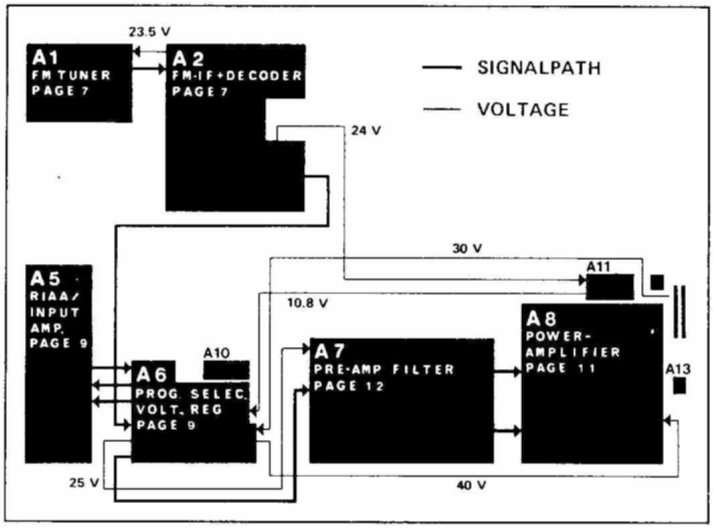

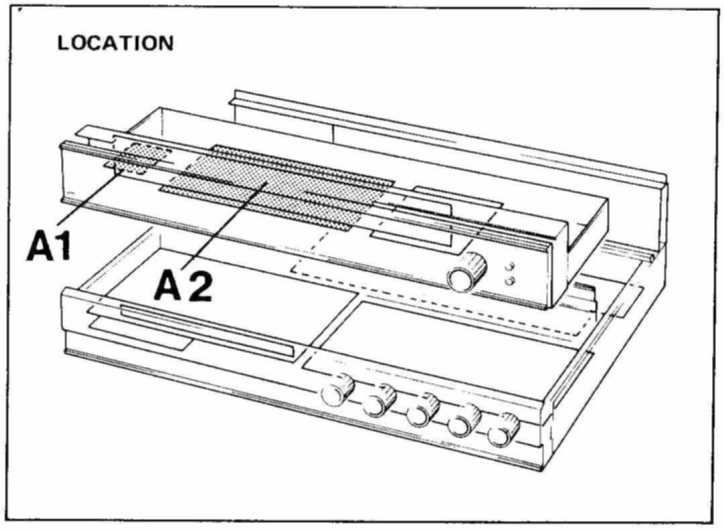

NOTE! The sensitivity measurements mentioned in the circuit diagram were made with a voltage divider in series with the sig. generator for M2, M3, and M4 (see figure below).

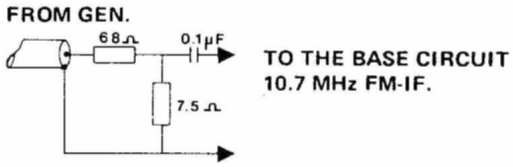

AC Voltage divider (10:1)

NOTE! The leads of the components in the voltage divider must be as short as possible.

THE MEASUREMENTS ARE MADE AS FOLLOWS:

- **M5:** Out max. AF voltage, reduced by 3 dB.
  M1: In 0.5 µV from sig. generator, 100% modulation.

  M5: Out max. AF voltage, reduced by 3 dB.
  M2: In 130 µV from sig. generator, 100% modulation.

  M5: Out max. AF voltage, reduced by 3 dB.
  M3: In 280 µV from sig. generator, 100% modulation.

  M5: Out max. AF voltage, reduced by 3 dB.
  M4: In 200 µV from sig. generator, 100% modulation.

  NOTE! There can be a slight spread on the sensitivity measurement figures between different receivers.

- **NOTE!** When measuring only the sensitivity between M1 and M5 you can use the TAPE OUT (pin 1 or 4) socket as M5 to avoid dismantling the cabinet.

NOTE! When leading a signal from a sig. generator into the circuit, connect the generator positive and negative lead across the IC.

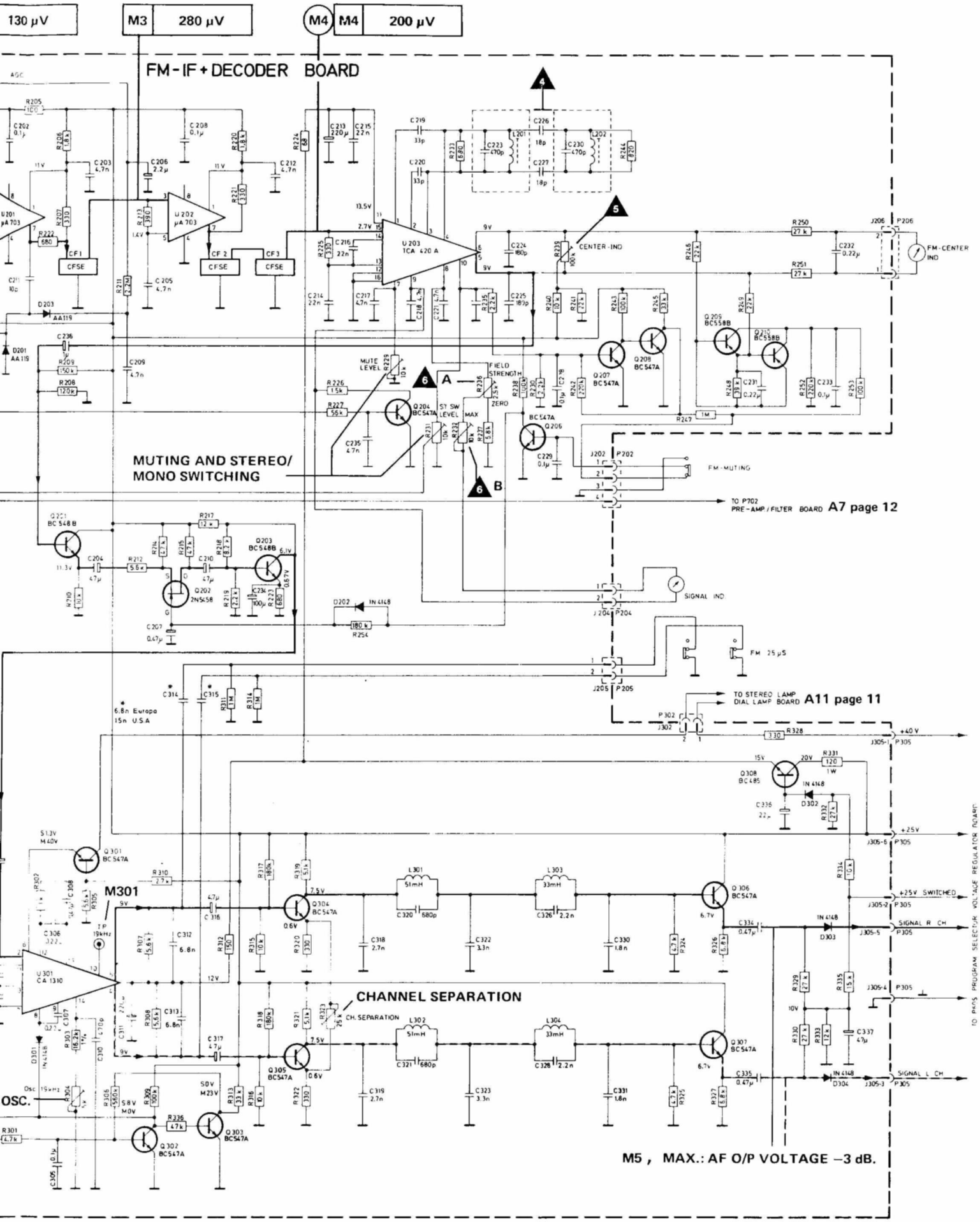

FM-IF SECTION - 43617

A10 LIGHT DIODES PROGR. SELECT

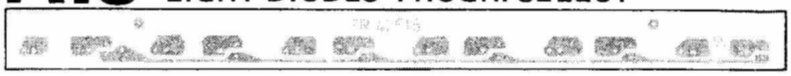

Seen from the solder side.

The transistors are seen from underneath

A5 RIAA/INPUT AMP.

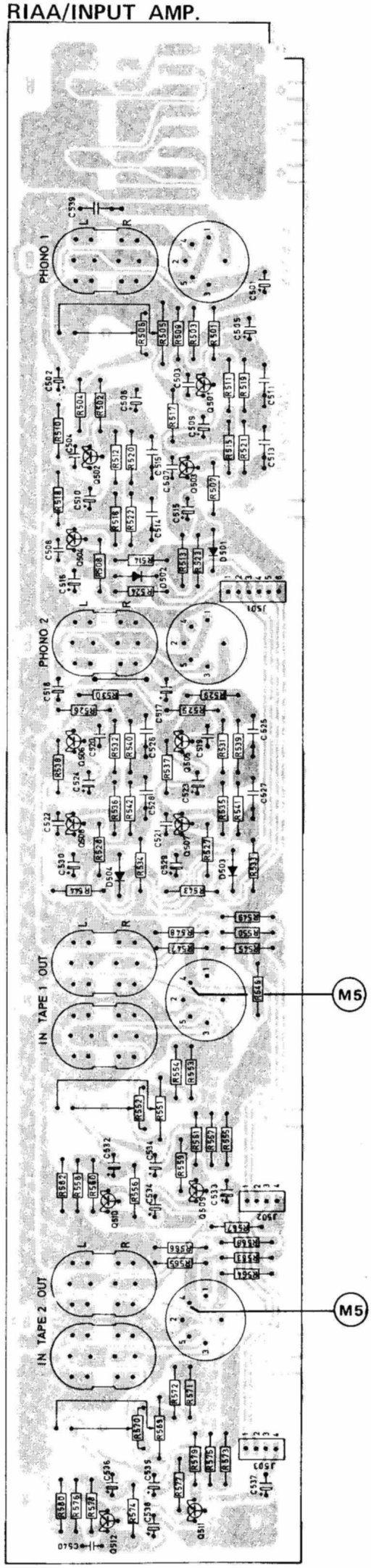

Seen from the solder side.

A6 PROGRAM SELECT/VOLTAGE REG.

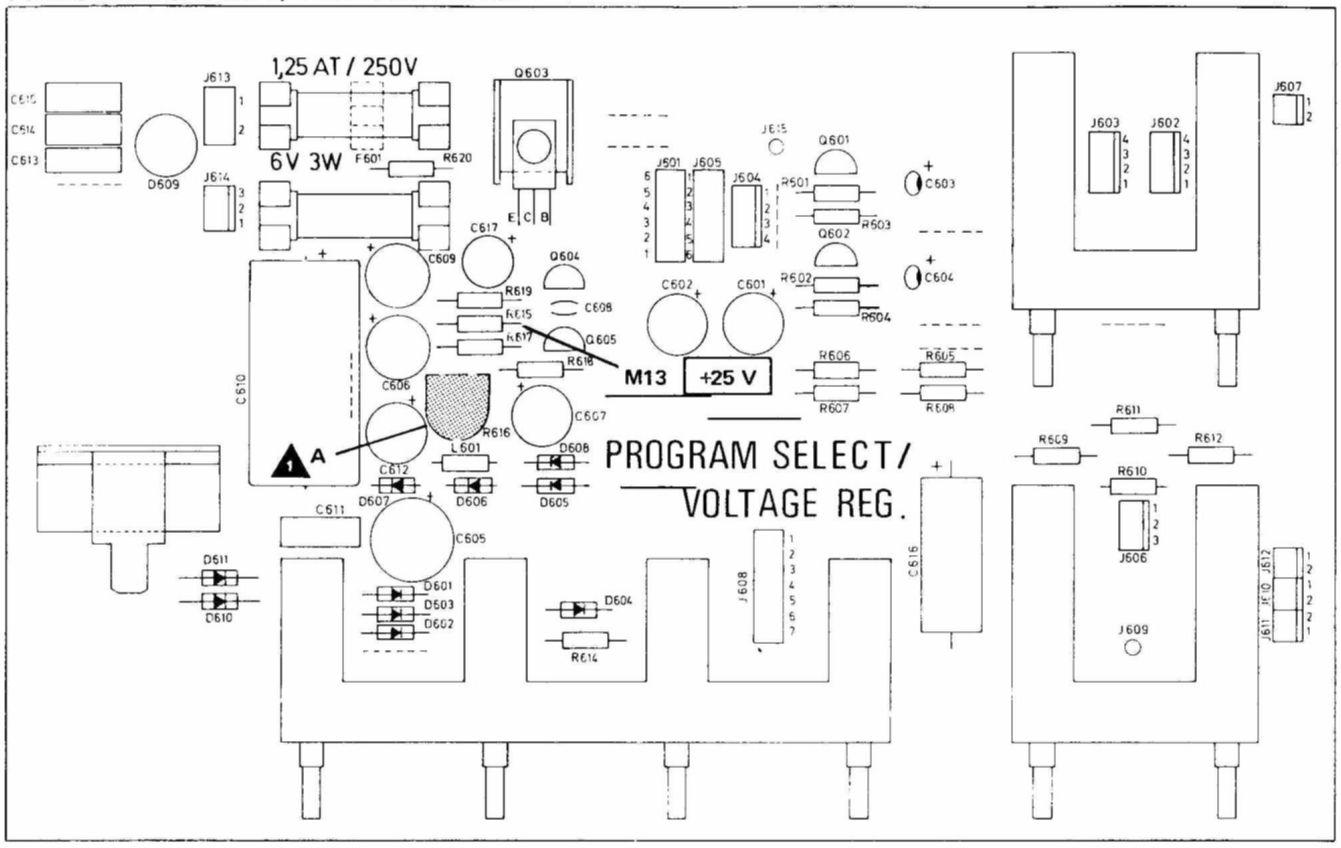

Seen from the component side.

A6 PROGRAM SELECT/VOLTAGE REG.

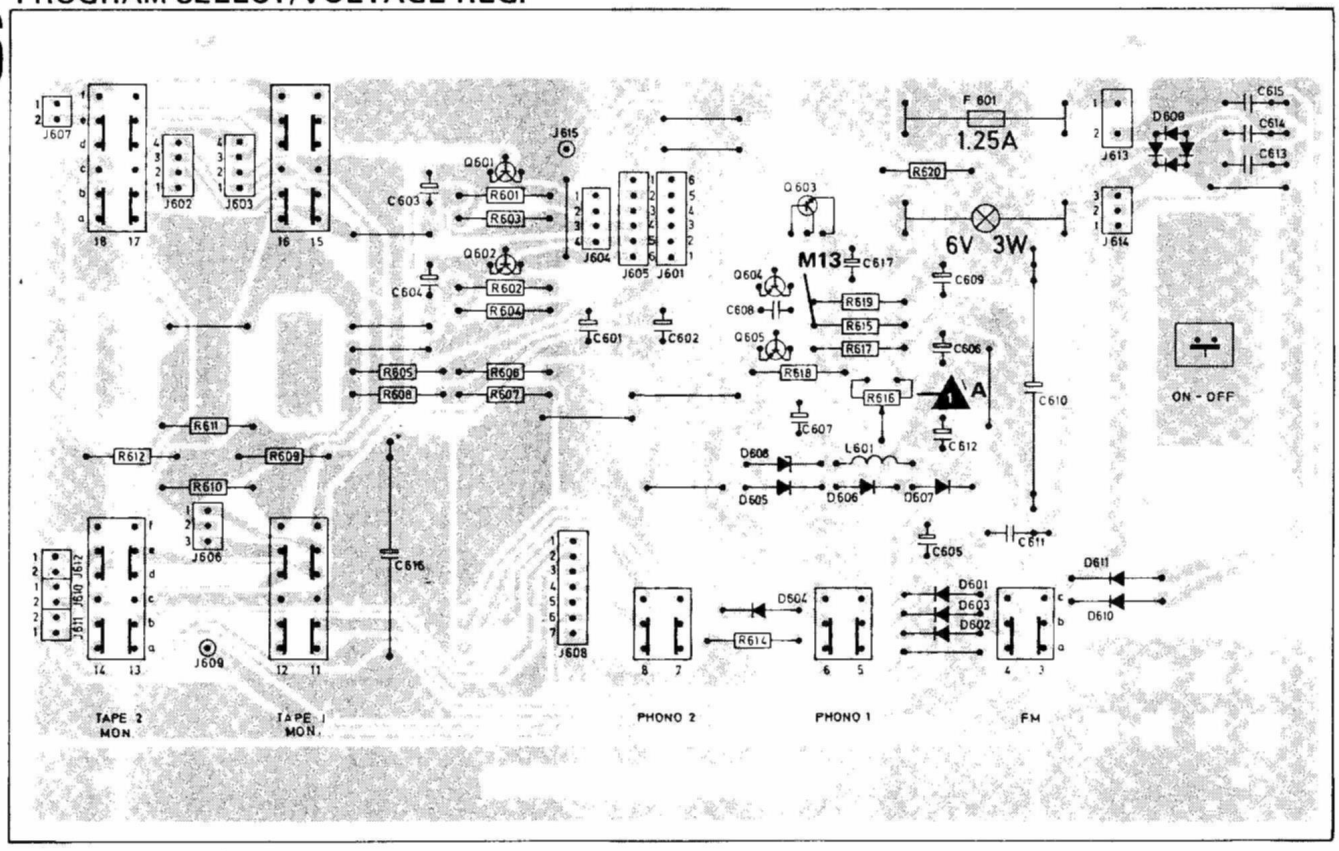

Seen from the solder side.

A5 RIAA / INPUT AMP. BOARD

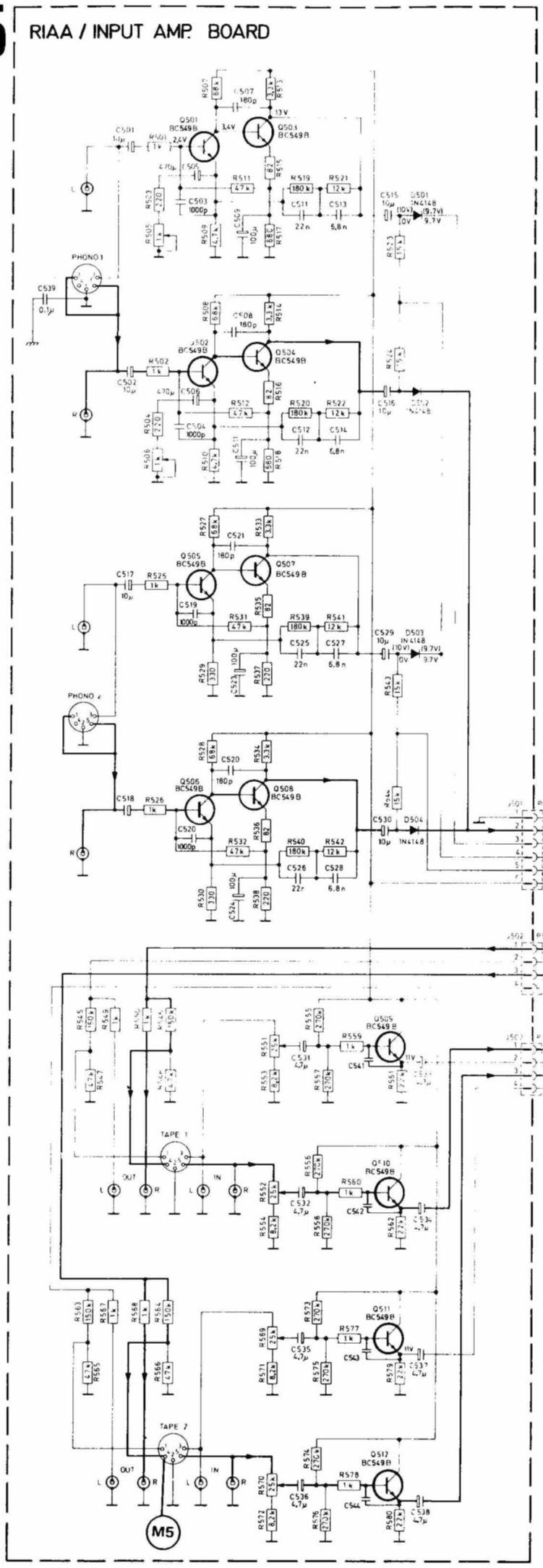

All selectors are shown in unoperated position

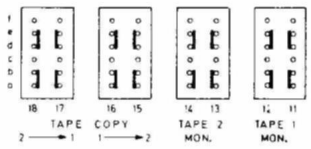

A6 PROGRAM SELECT./VOLTAGE REG. BOARD

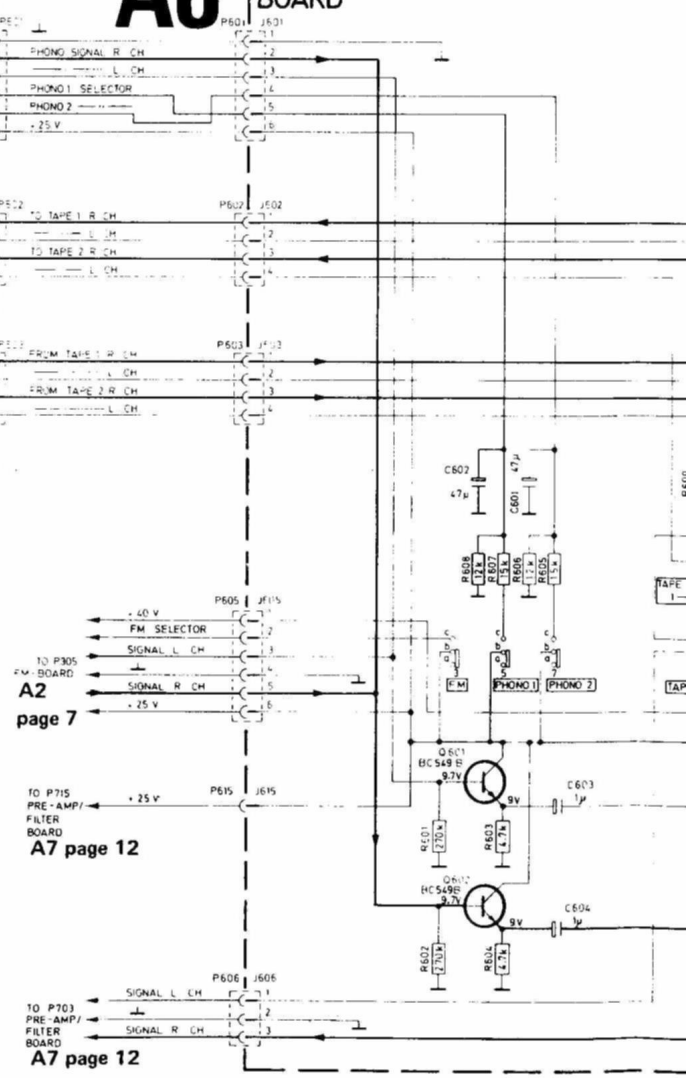

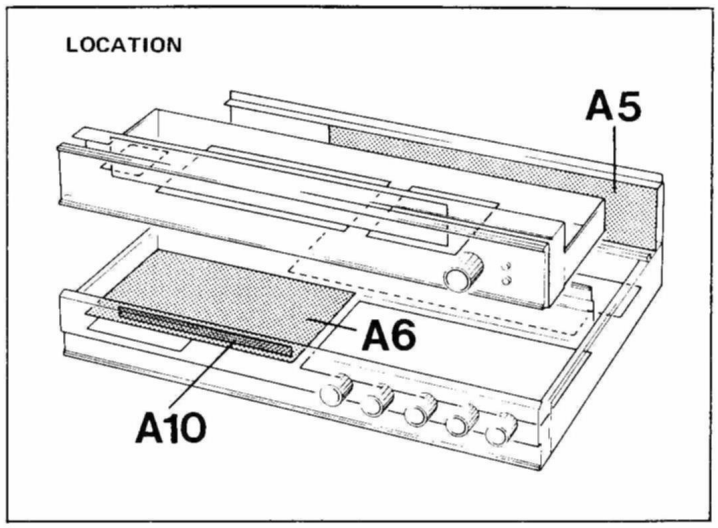
LOCATION
A5
A6
A10

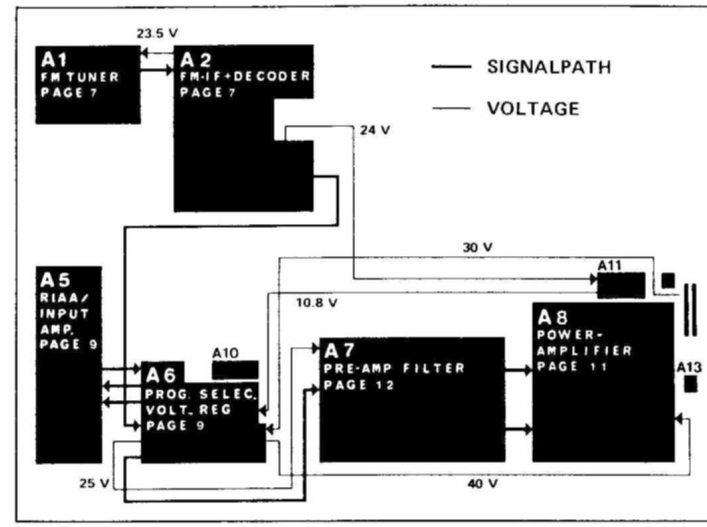
23.5 V
A1
FM TUNER
PAGE 7
A2
FM-IF+DECODER
PAGE 7
SIGNALPATH
VOLTAGE
24 V
30 V
A11
10.8 V
A5
RIAA/
INPUT
AMP.
PAGE 9
A10
A6
PROG. SELEC.
VOLT. REG
PAGE 9
A7
PRE-AMP FILTER
PAGE 12
A8
POWER-
AMPLIFIER
PAGE 11
A13
25 V
40 V

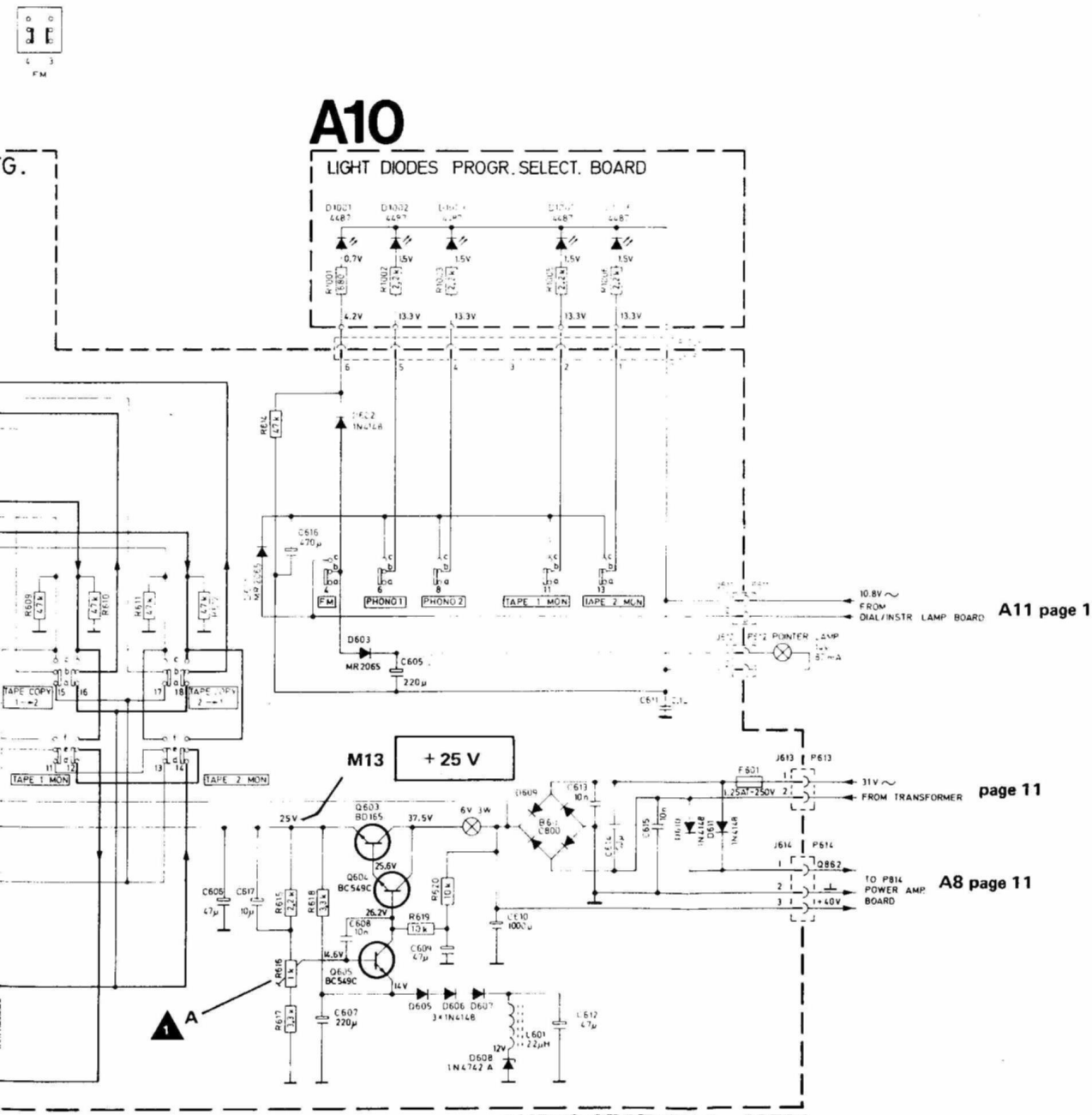
A10
LIGHT DIODES PROGR. SELECT. BOARD
FM
PHONO 1
PHONO 2
TAPE 1 MON
TAPE 2 MON
10.8V ~
FROM
DIAL/INSTR LAMP BOARD
A11 page 11
POINTER LAMP
M13
+ 25 V
31V ~
FROM TRANSFORMER
page 11
TO P814
POWER AMP.
BOARD
A8 page 11
A

A13 POWER READING

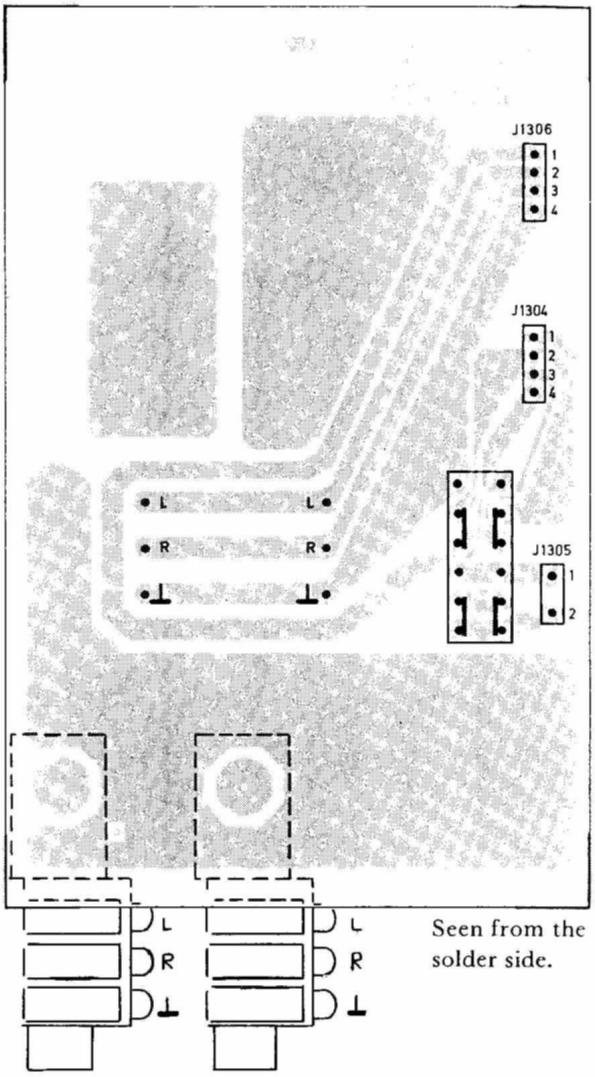

Seen from the solder side.

A8 POWER AMPLIFIER

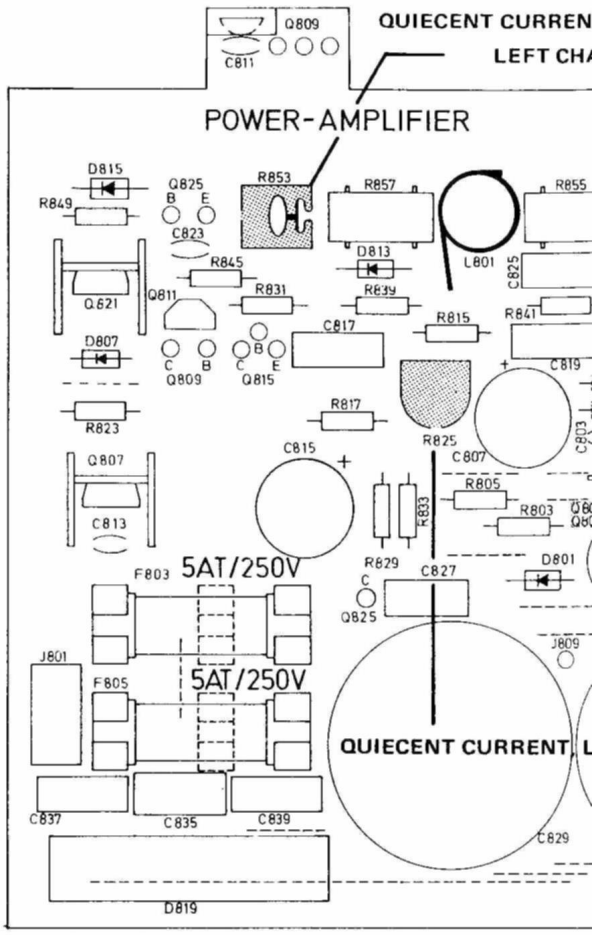

Seen from the component side.

The transistors are seen from underneath

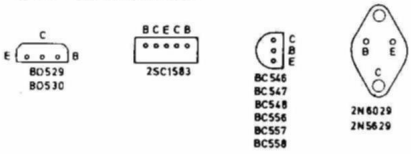

A8 POWER AMPLIFIER

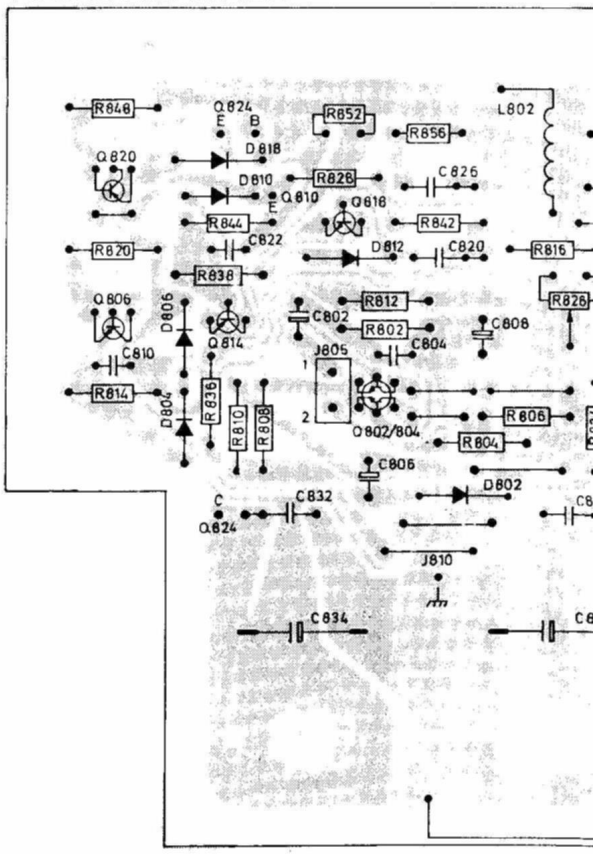

Seen from the solder side.

LOCATION

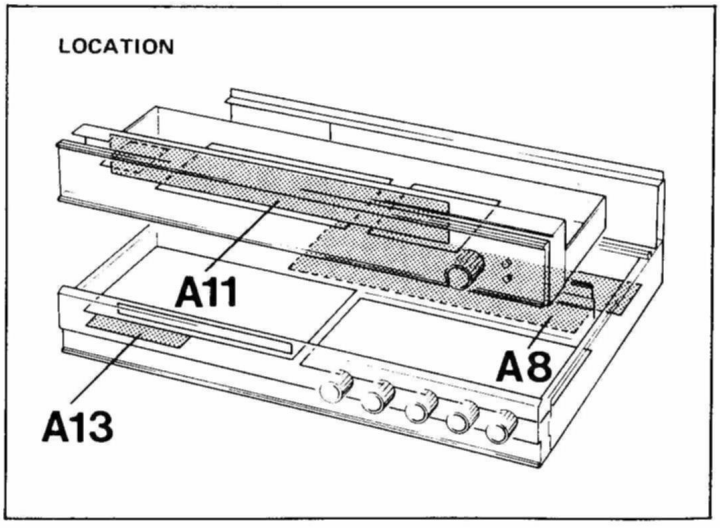

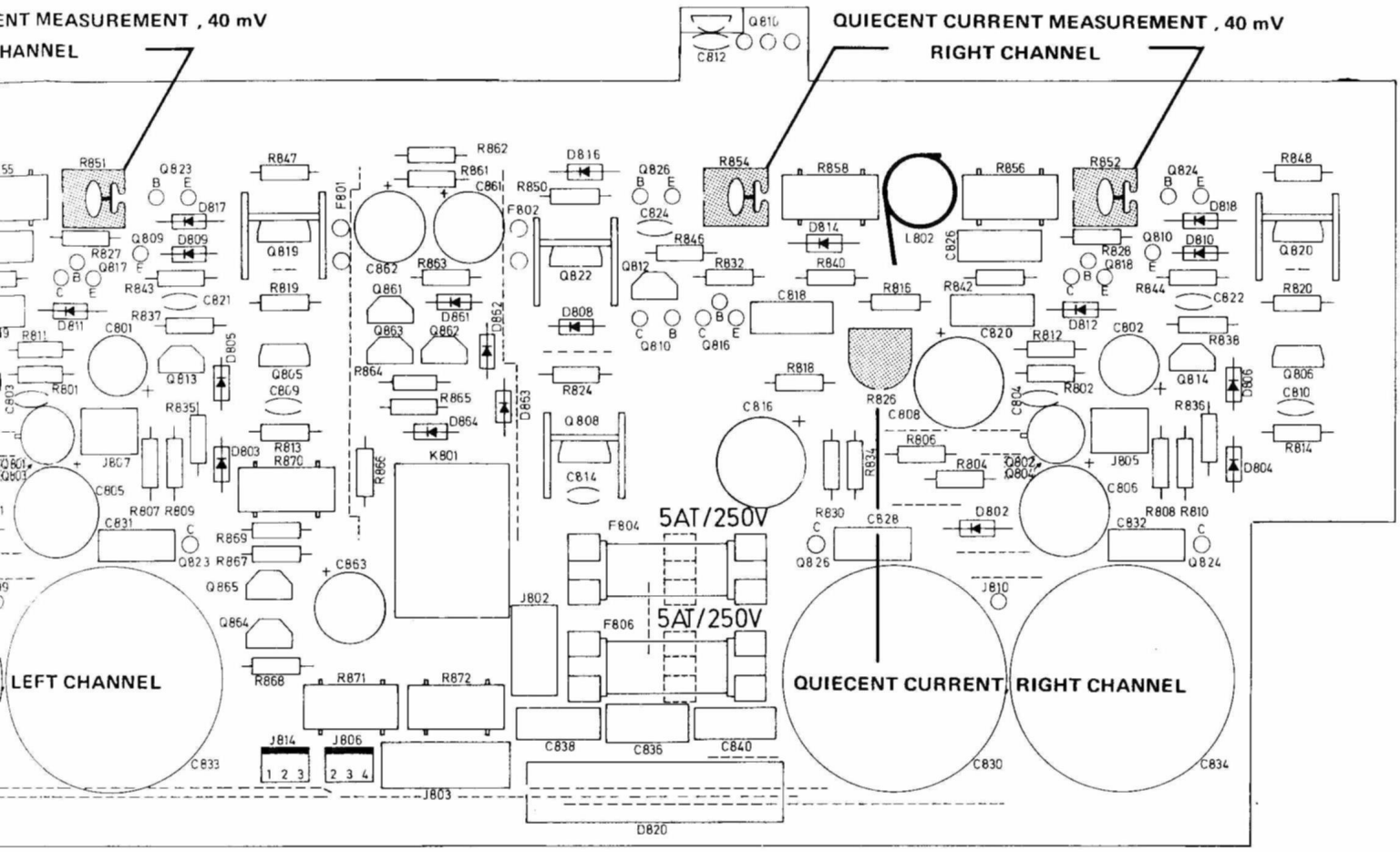
ENT MEASUREMENT , 40 mV
HANNEL
QUIECENT CURRENT MEASUREMENT , 40 mV
RIGHT CHANNEL
5AT/250V
5AT/250V
LEFT CHANNEL
QUIECENT CURRENT
RIGHT CHANNEL

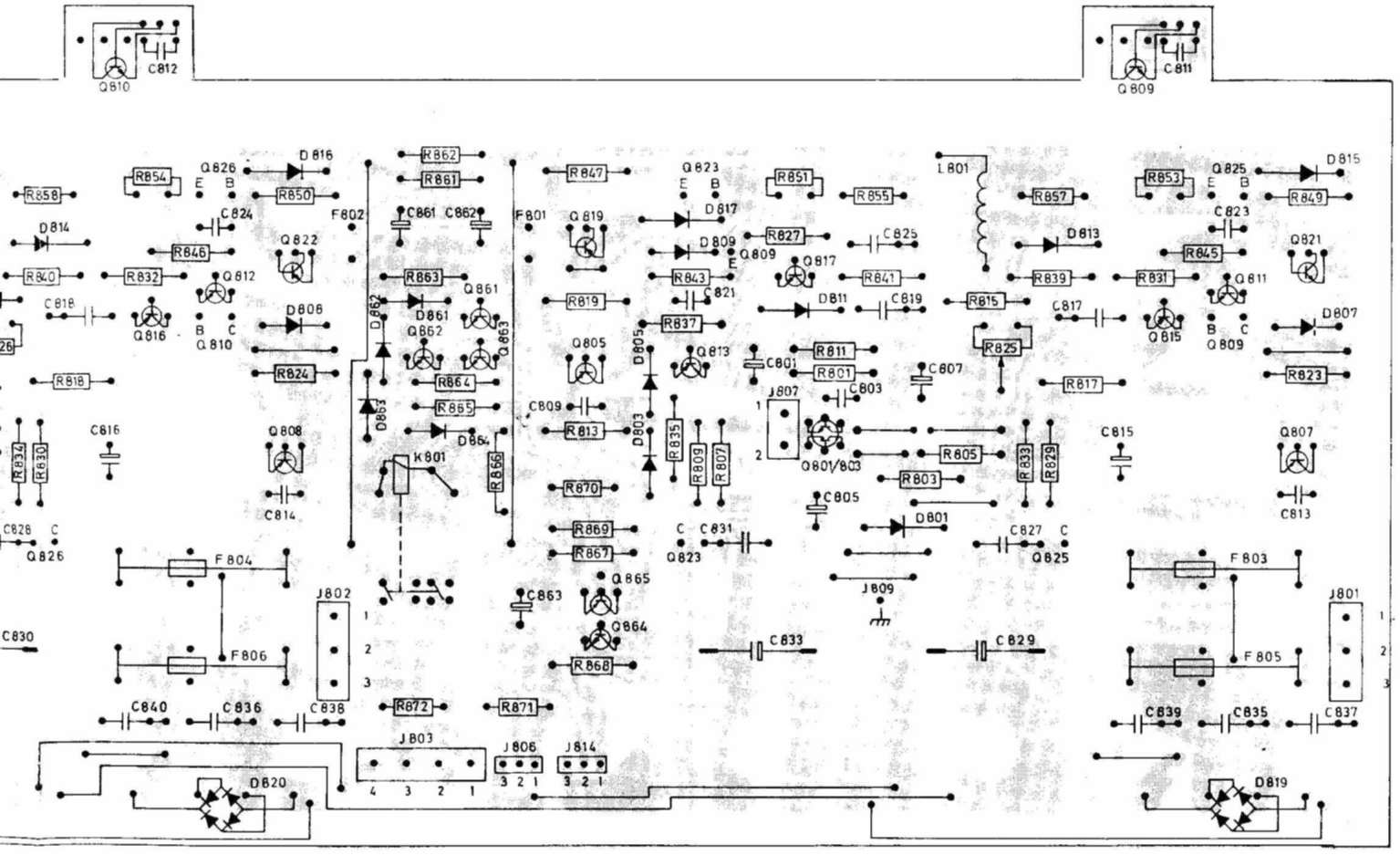

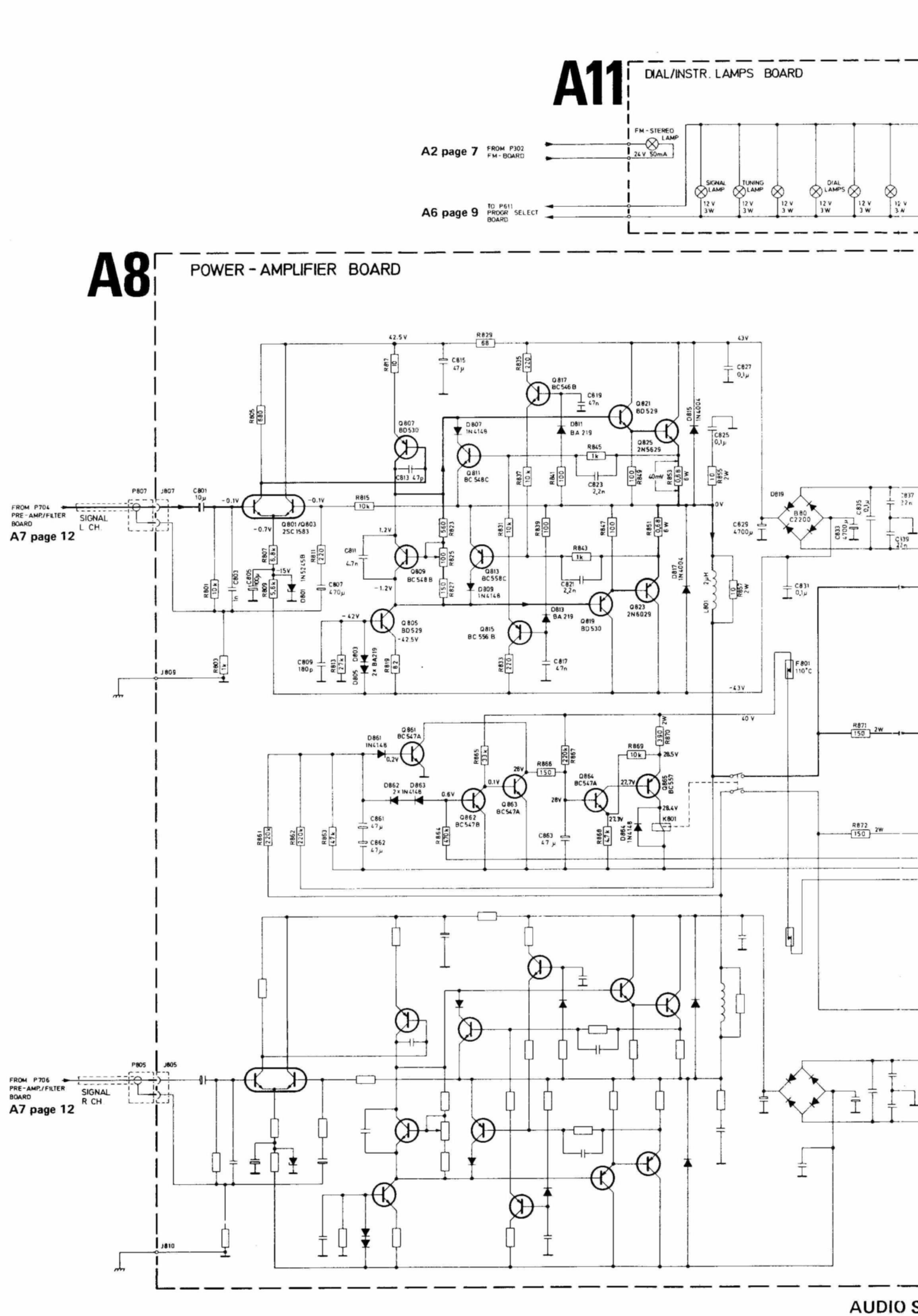
A11
DIAL/INSTR. LAMPS BOARD
A2 page 7
FROM P302 FM-BOARD
A6 page 9
TO P611 PROGR SELECT BOARD
FM-STEREO LAMP
24 V 50mA
SIGNAL LAMP
TUNING LAMP
DIAL LAMPS
12 V 3W
A8
POWER-AMPLIFIER BOARD
FROM P704 PRE-AMP./FILTER BOARD
SIGNAL L CH.
A7 page 12
FROM P706 PRE-AMP./FILTER BOARD
SIGNAL R CH
A7 page 12
Q801/Q803 2SC1583
Q805 BD529
Q807 BD530
Q809 BC548B
Q811 BC548C
Q813 BC558C
Q815 BC556B
Q817 BC546B
Q819 BD530
Q821 BD529
Q823 2N6029
Q825 2N5629
Q861 BC547A
Q862 BC547B
Q863 BC547A
Q864 BC547A
Q865 BC557
B80 C2200
F801 110°C
K801
42.5V
43V
0V
-43V
40V
-42V
-42.5V
-0.1V
-0.7V
-15V
1.2V
-1.2V
0.2V
0.1V
0.6V
28V
28.5V
22.7V
28.4V
22.3V
J807
J809
J810
P807
P805
J805
AUDIO S

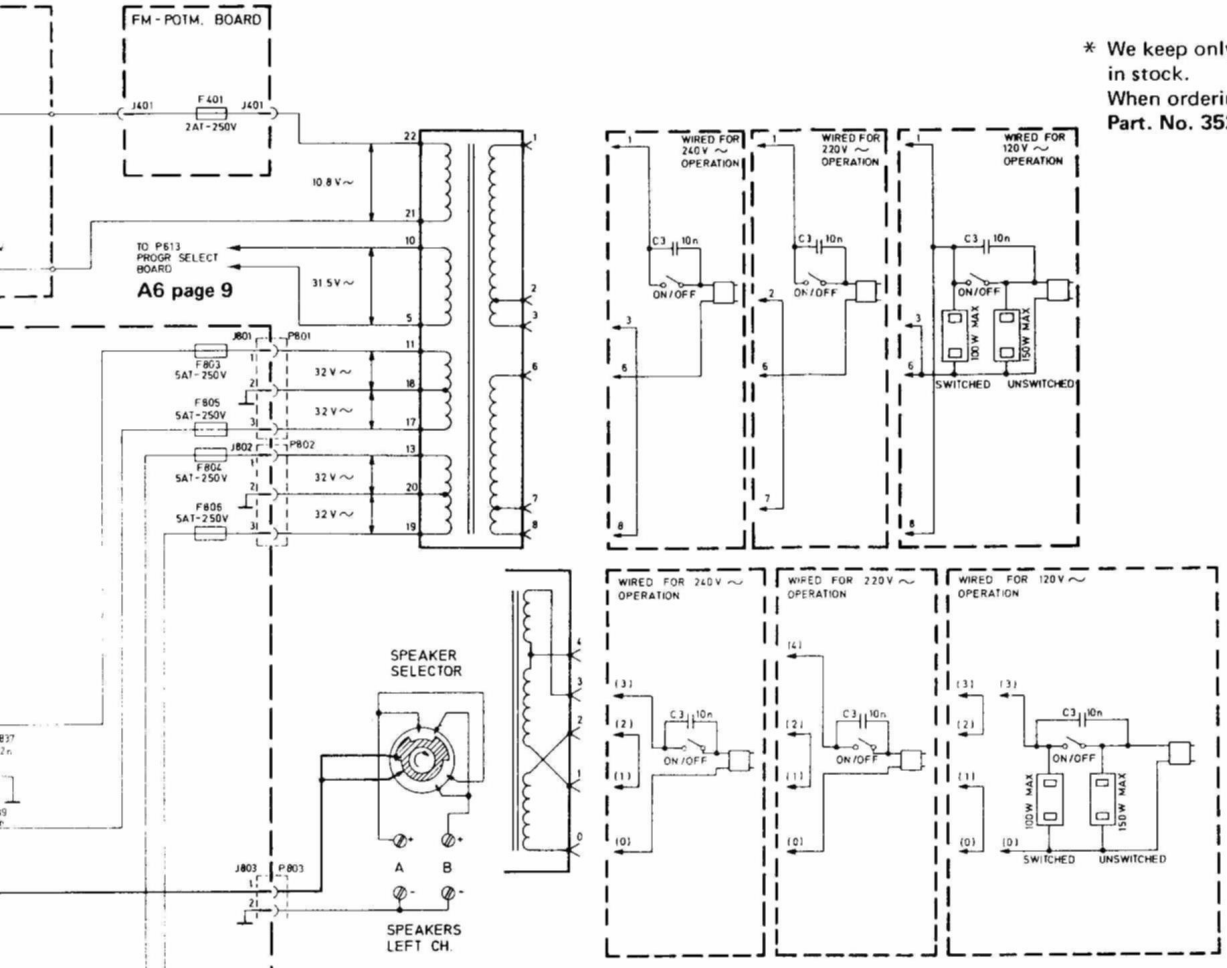

* We keep only one type of power-transformer in stock.
When ordering the transformer, use **Part. No. 352537.**

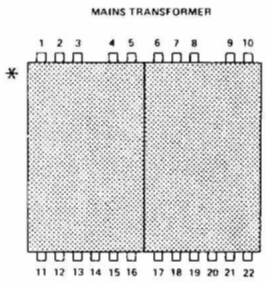

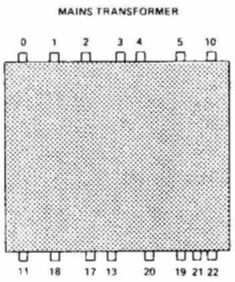

A13

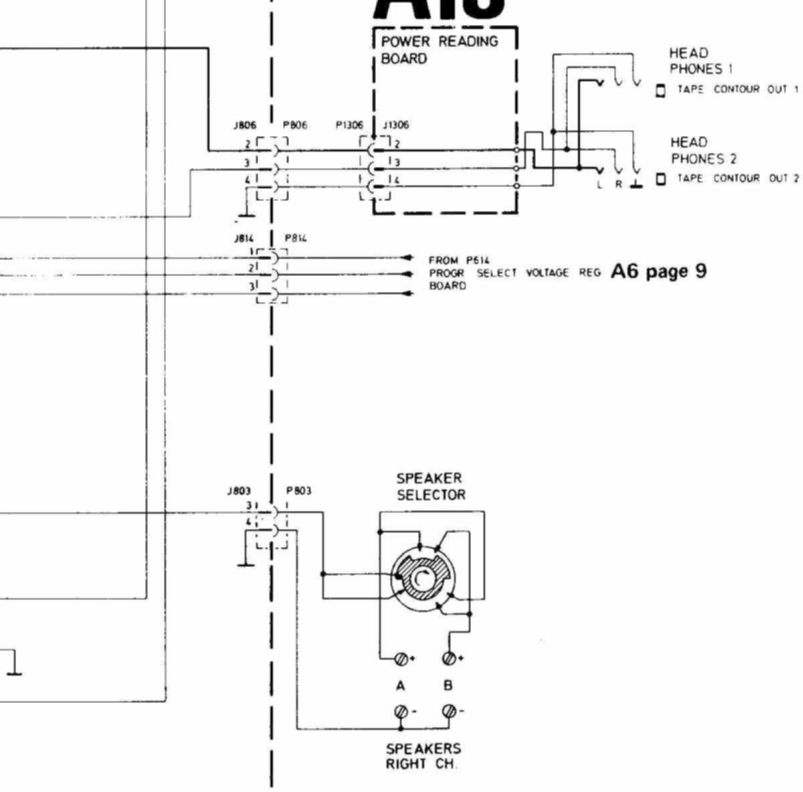

AF–ADJUSTMENTS.

Quiescent current.

The most convenient place to connect the voltmeter is between the top of emitter resistors R853/R851 (left channel) and R854/R852 (right channel), on the component side of the board.

After 10 minutes warm-up (**with the volume control in minimum position**), the voltage should be 40 mV.
If necessary, adjust with R825 (left channel) and R826 (right channel).

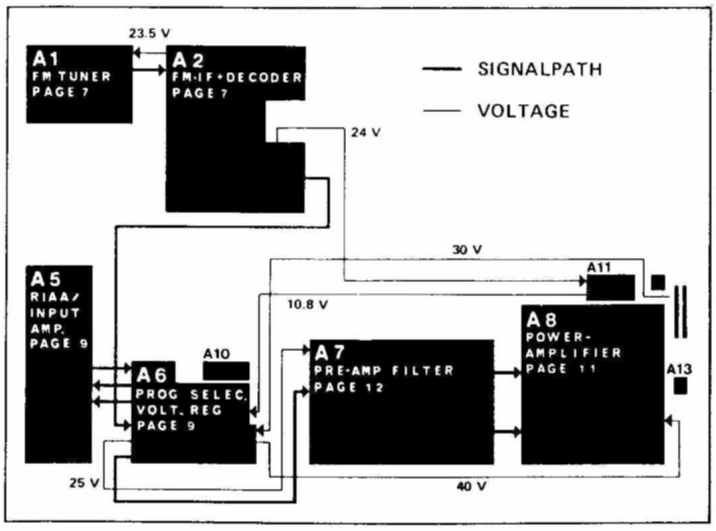

A7

PRE - AMP. / FILTER BOARD

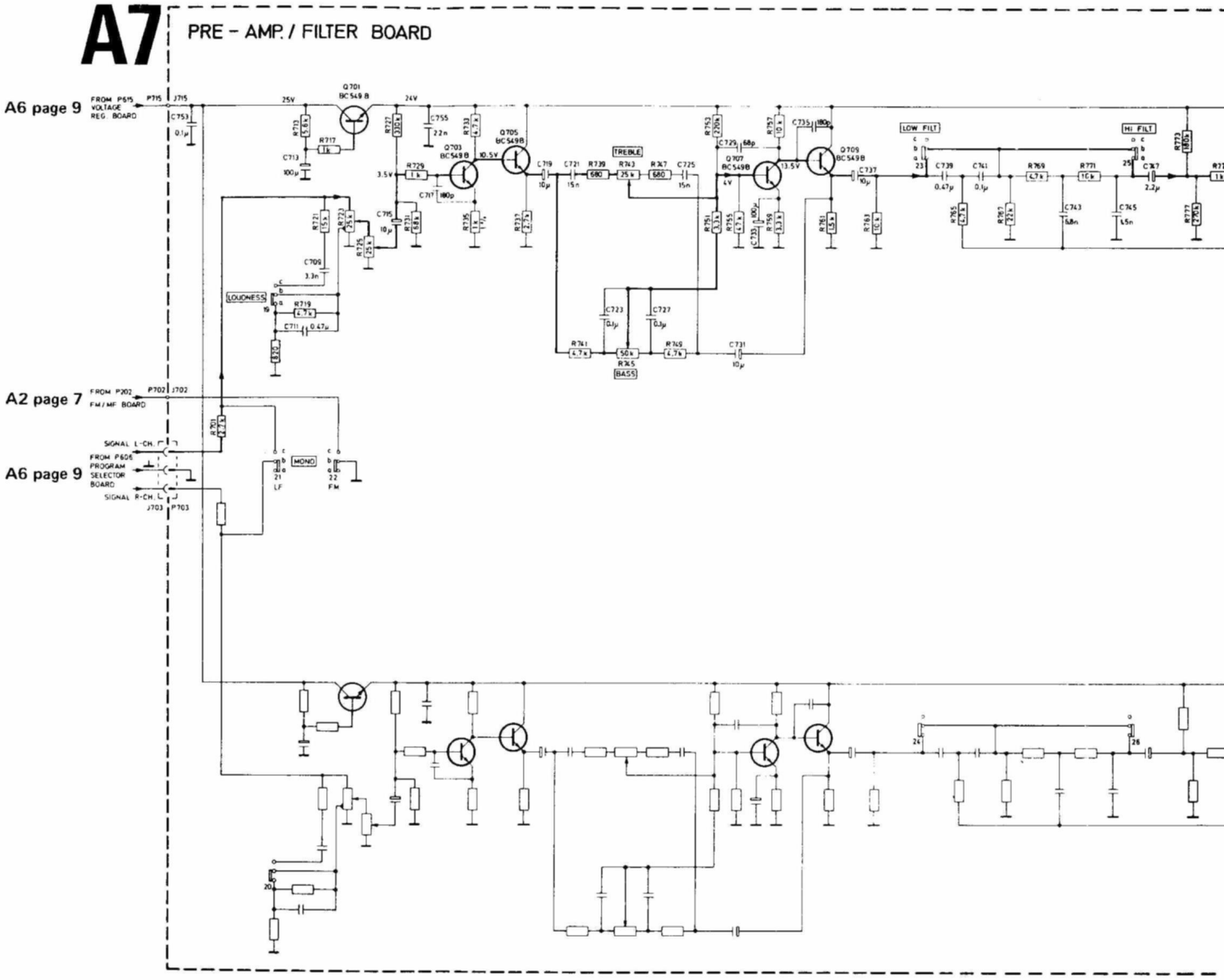

AUDIO SECTIO

PRE-AMP/FILTER

A7

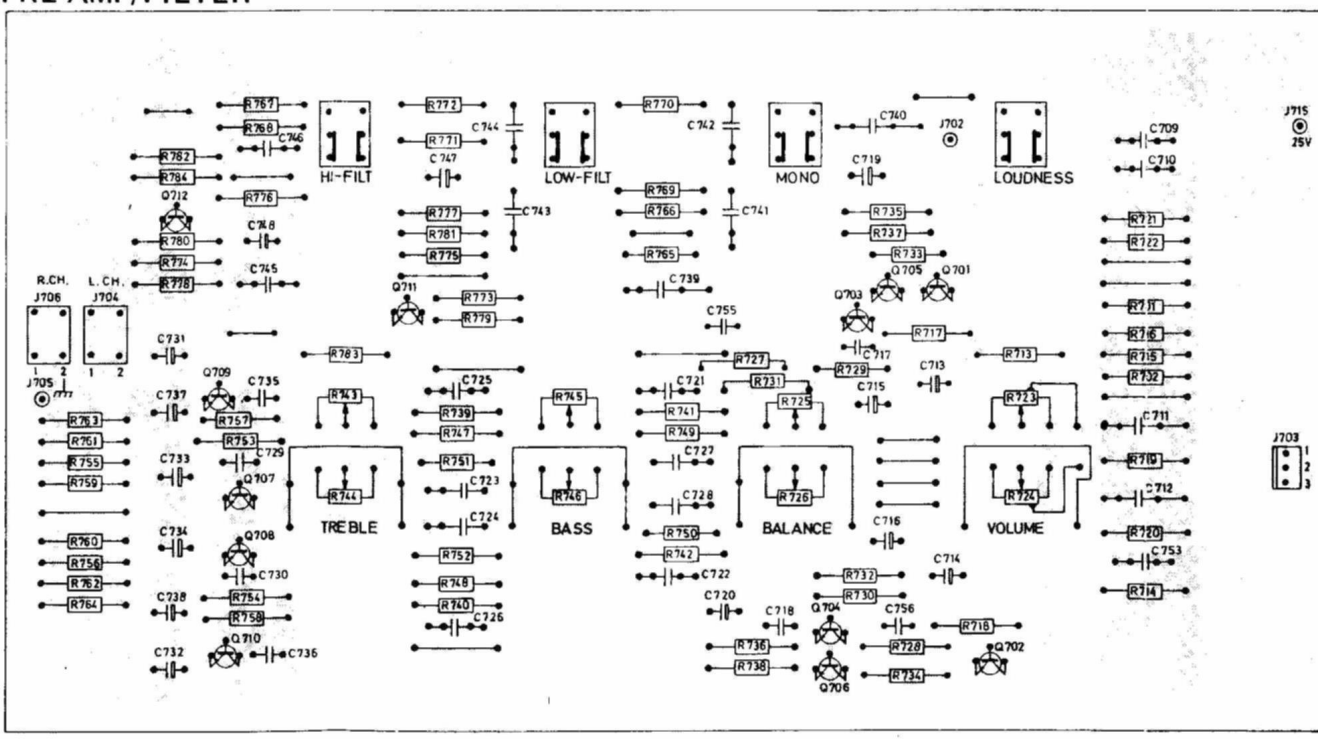

Seen from the solder side.

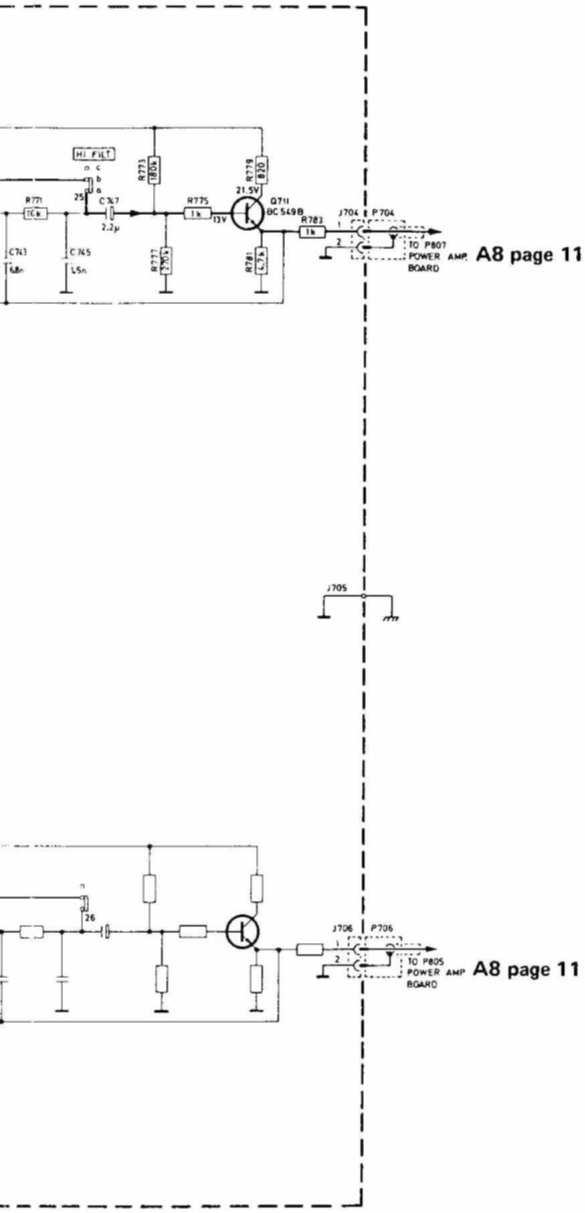

AUDIO SECTION 2 - 43595

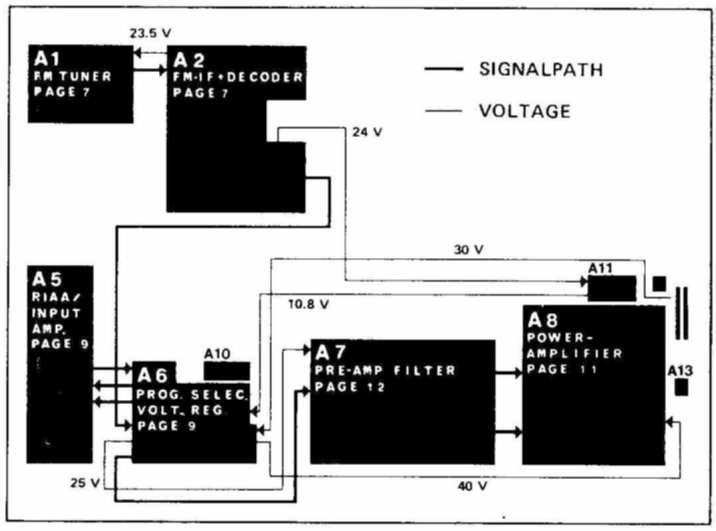

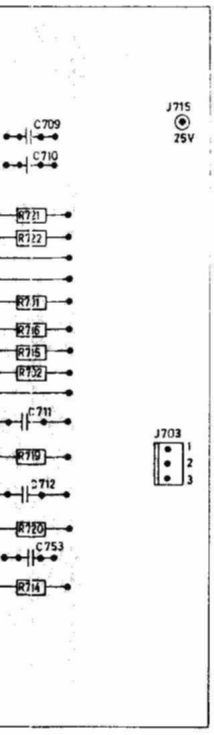

The transistor are seen from underneath

All selectors are shown in unoperated position

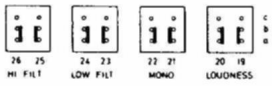

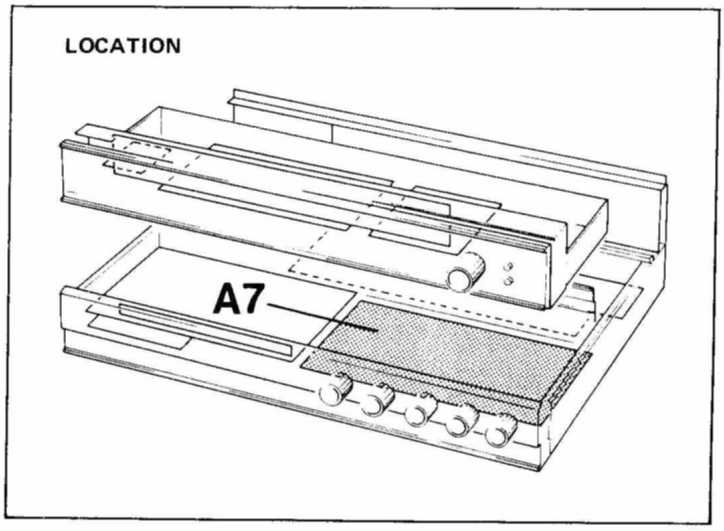

1395 - 6 - 76 Part No. 714008
Printed in Norway by Reclamo A/S