THE RADIO AMATEUR'S HANDBOOK

CIVILIAN TRAINING LIBRARY
SIGNAL CORPS [illegible] DEVELOPMENT LABORA[illegible]

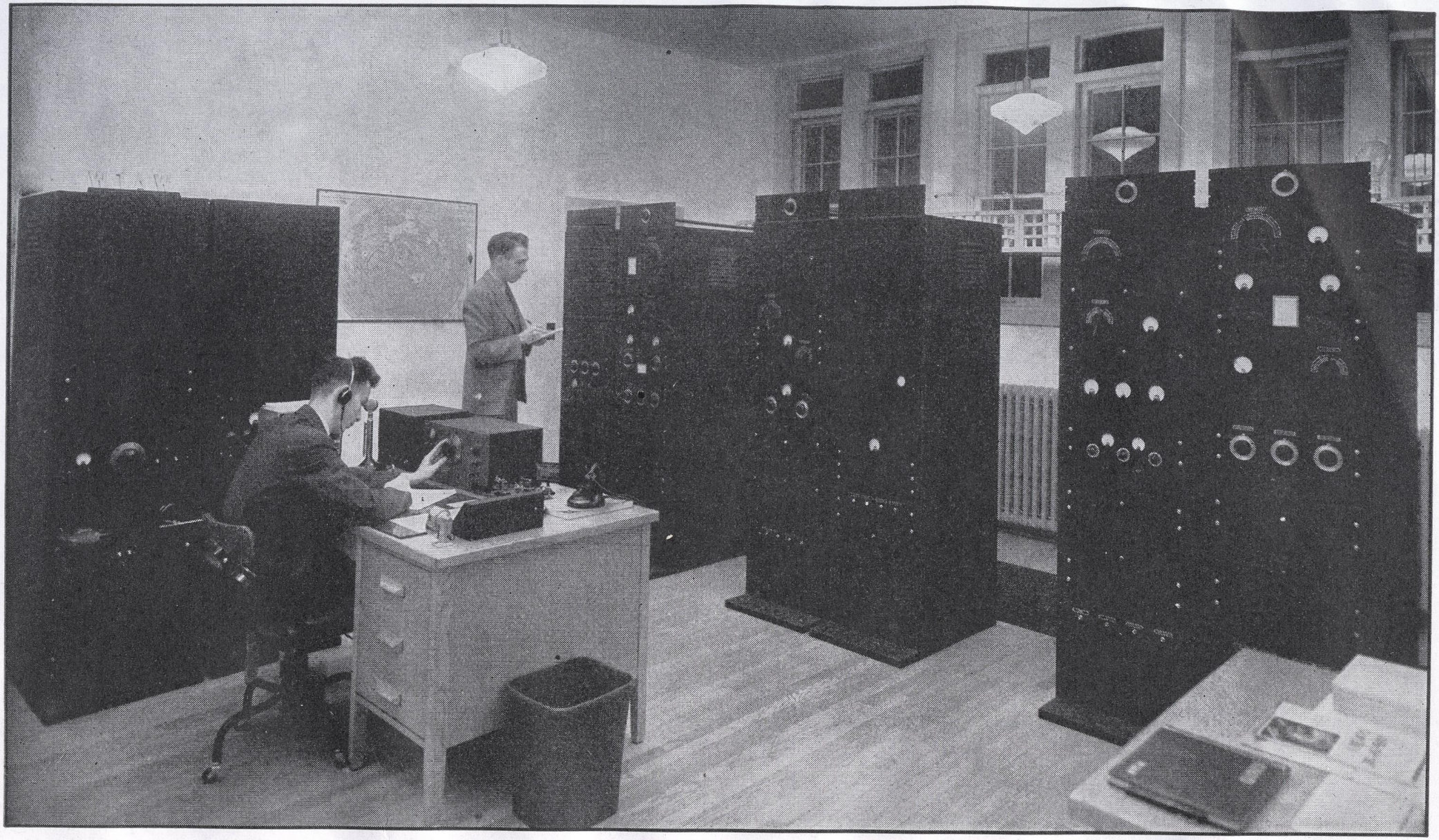

THE OPERATING ROOM AT THE MAXIM MEMORIAL STATION, W1AW, A.R.R.L. HEADQUARTERS

Separate 1-kw. transmitters are installed for each band. Voice transmissions on 1906, 3960, 14,237, 28,510 and 58,968 kc. follow simultaneous telegraph messages to all amateurs sent on 1761, 3575, 7150, 14,254, 28,510 and 58,968 kc. at 7.30 and 11 p.m. CST. Operators "Hal" Bubb (seated) and "Geo" Hart (standing) are always ready for a call from any amateur

NINETEENTH EDITION

NINETEEN-FORTY-TWO

★

THE RADIO AMATEUR'S HANDBOOK



CIVILIAN TRAINING LIBRARY
SIGNAL CORPS GENERAL DEVELOPMENT LABORATO

BY THE HEADQUARTERS STAFF OF THE
AMERICAN RADIO RELAY LEAGUE

PUBLISHED BY THE AMERICAN RADIO RELAY LEAGUE,
INCORPORATED, WEST HARTFORD, CONNECTICUT

COPYRIGHT 1941 BY THE AMERICAN RADIO RELAY LEAGUE, INC.

Copyright secured under the Pan-American Convention.
All rights of translation reserved.

●

First Edition, November, 1926	5,000 copies
Second Edition, First Printing, January, 1927	5,000 copies
Second Edition, Second Printing, April, 1927	10,000 copies
Third Edition, First Printing, October, 1927	10,000 copies
Third Edition, Second Printing, April, 1928	10,000 copies
Fourth Edition, December, 1928	10,000 copies
Fifth Edition, May, 1929	10,000 copies
Sixth Edition, First Printing, November, 1929	10,000 copies
Sixth Edition, Second Printing, March, 1930	10,000 copies
Sixth Edition, Third Printing, June, 1930	7,000 copies
Seventh Edition, October, 1930	25,000 copies
Eighth Edition, April, 1931	25,000 copies
Ninth Edition, First Printing, January, 1932	30,000 copies
Ninth Edition, Second Printing, September, 1932	10,000 copies
Tenth Edition, First Printing, January, 1933	30,000 copies
Tenth Edition, Second Printing, July, 1933	8,750 copies
Eleventh Edition, First Printing, January, 1934	30,000 copies
Eleventh Edition, Second Printing, May, 1934	13,000 copies
Twelfth Edition, First Printing, November, 1934	40,000 copies
Twelfth Edition, Second Printing, July, 1935	8,000 copies
Thirteenth Edition, First Printing, October, 1935	40,000 copies
Thirteenth Edition, Second Printing, February, 1936	33,200 copies
Fourteenth Edition, First Printing, October, 1936	40,000 copies
Fourteenth Edition, Second Printing, February, 1937	28,300 copies
Fifteenth Edition, First Printing, October, 1937	40,000 copies
Fifteenth Edition, Second Printing, January, 1938	25,000 copies
Sixteenth Edition, November, 1938	60,000 copies
Seventeenth Edition, First Printing, November, 1939	40,000 copies
Seventeenth Edition, Second Printing, January, 1940	25,000 copies
Eighteenth Edition, First Printing, November, 1940	40,000 copies
Eighteenth Edition, Second Printing, January, 1941	20,000 copies
Eighteenth Edition, Third Printing, June, 1941	10,000 copies
Eighteenth Edition, Fourth Printing, September, 1941	5,000 copies
Nineteenth Edition, First Printing, November, 1941	60,000 copies
Nineteenth Edition, Second Printing, March, 1942	15,000 copies
Nineteenth Edition, Third Printing, April, 1942	25,000 copies

PRINTED IN U. S. A. BY

THE RUMFORD PRESS

CONCORD, NEW HAMPSHIRE

Foreword

FROM MODEST BEGINNINGS in 1926 *The Radio Amateur's Handbook* has grown into an amateur institution of remarkable dimensions. In nineteen editions and thirty-four pressings, it has achieved a total distribution of three-quarters of a million copies, its fame echoing around the world. This wholehearted reception can be based only on real value to its readers. Not only have schools and technical classes adopted it as a text but, more important, it is the recognized right-hand guide of practical amateurs everywhere. In this new edition for 1942 the publishers believe that they are presenting the amateur fraternity with a work that will be found more helpful than any of its predecessors.

Devoted to a fast-moving and progressive science, it is only natural that throughout its life the *Handbook* should have required sweeping and virtually continuous modification. Although an occasional piece of apparatus is carried over to a new edition when it still represents the best practice in its class, we arrived many years ago at the place where the *Handbook* annually experiences a complete rewriting, so that the successive editions have small resemblance to each other. From the first a strenuous effort has been made to keep the book as up-to-date, as accurate and as reliable as is humanly possible. Special pains have been taken to restrict the material to modern, sound, well-tried practice. Having somewhat the character of an annual review of time-proven methods in apparatus construction and operation, the *Handbook* has never provided a place for freaky circuits or methods. As any practicing amateur is well aware, there is an almost infinite number of ways of accomplishing a given result in his station — some good, some poor, many indifferent. Our editorial task has largely been one of selecting, eliminating from this enormous wealth of ideas all those that have not proved themselves by successful application in practice. At the same time we have endeavored not to lose sight of our duty to assist the amateur in keeping "out in front" in the art, gaining the benefits of new ideas whose soundness has been established. The net result, we pardonably feel, is to give *Handbook* apparatus design an exceptional trustworthiness.

The annual revising of the *Handbook* is a major task in the family life of the headquarters staff of the American Radio Relay League at West Hartford. Most of the technically-skilled specialists on the League's staff — men who have earned their spurs in amateur radio — participate in the work. Prepared under the general technical editorship of George Grammer, *QST*'s technical editor, and with major contributions by him, the present edition also represents many months of labor on the part of Donald H. Mix and Byron Goodman, *QST*'s assistant technical editors; Clinton B. DeSoto, assistant secretary of the League; and Vernon Chambers, in charge of *QST*'s technical information service. The station operating material of course is contributed by the League's communications manager, Francis E. Handy. The production of the book has been on the broad shoulders of Clark C. Rodimon, *QST*'s managing editor.

In this edition, as the result of many years' study and experience, we have made a major improvement in organization. The book is divided into two parts. In the first we have grouped all the material treating of principles, theory and design considerations — the enduring basis of the art. In the second part are the apparatus designs and operating instructions, embodying the current practical employment of the basic knowledge of the first part.

The first ten chapters now constitute a textbook on the theory of radio. Our aim has been to write an understandable nonmathematical treatment for

busy, practical people of average education. A major objective has been to provide the answers to the questions which naturally arise in the course of amateur operation. The material has been so arranged as to make it readily possible to find what is wanted, a multitude of headings identifying subjects at a glance. Because theory bores most practical people, the information has been presented concisely but with copious cross-references to permit the background always to accompany the subject under consideration. We have endeavored to employ cross-references in such quantity that no treatment of any subject can be considered "too technical," since the references will eventually lead the reader, if he needs it, to the applying fundamentals themselves. Finally, this portion of the book arranges subjects in a logical order with the thought that it can serve as the basis for a reasonably well-ordered radio study course. Necessarily compact (as is any good text), information is deliberately presented without sugar-coating, but every effort has been made to make it understandable and to avoid saying things in such a way that they are intelligible only to those who already know the subject thoroughly!

A word about the reference system: It will be noted that each chapter is divided into sections and that these are numbered serially within each chapter. The number takes the form of two digits or groups separated by a hyphen. The first figure is the chapter number, the second the section number within the chapter. Cross-references in the text take such a form as (§ 4-7), for example, which means that the subject referred to will be found discussed in Chapter Four, Section 7.

The second part of the book is that which is dearest to the heart of the practicing amateur. As always, it gets down immediately to constructional considerations, but reference to the same topics in the first part of the book will lead the amateur quickly to all the needed information on the whys thereof. Dozens of pieces of new equipment have been built — and tested! — in keeping with the perpetually-changing perspective of amateur radio, and their construction is detailed with plentiful illustrations. At the end of each construction chapter is a bibliography of articles in *QST*. In some of these will be found more extensive descriptions of some of the pieces of apparatus. References to the bibliographies in these cases take such a form as (*Bib. 5*), which means that the fifth item in the bibliography at the end of *that* chapter gives reference to a *QST* article describing the particular piece of gear in somewhat greater detail.

Throughout the book, illustrations are serially numbered in each chapter. Thus, Fig. 1107 can be readily located as the seventh illustration in Chapter Eleven. There is a carefully-prepared index at the end of the reading pages.

A handbook, to fill all the functions one visualizes with the word, must bring the reader data and specifications on the manufactured products which are the raw material of its field. The manufacturers of the country have collaborated with us in this aim by presenting in this book much that is not mere advertising but that is catalog technical data. The amateur constructor and experimenter will find it convenient to possess in such juxtaposition both the constructional guidance he seeks and the needed data on parts and materials, since both are necessary ingredients of the complete standard manual of amateur high-frequency communication.

We here shall be very happy if this edition of the *Handbook* brings as much inspiration and assistance to amateurs and would-be amateurs as have its predecessors.

KENNETH B. WARNER
Managing Secretary, A.R.R.L.

WEST HARTFORD, CONN.
November, 1941

Contents

Frontispiece:

HIRAM PERCY MAXIM MEMORIAL STATION, W1AW
THE AMATEUR—HIS CODE OF ETHICS

INTRODUCTION

The Story of Amateur Radio 9
Chapter 1 Getting Started 15
Chapter 2 Electrical and Radio Fundamentals 21

PRINCIPLES AND DESIGN

Chapter 3 Vacuum Tubes 42
Chapter 4 Radio-Frequency Power Generation 58
Chapter 5 Radiotelephony 84
Chapter 6 Keying 102
Chapter 7 Receiver Principles and Design 111
Chapter 8 Power Supplies 143
Chapter 9 Wave Propagation 156
Chapter 10 Antenna Systems 162

CONSTRUCTION AND DATA

Chapter 11 Receiver Construction 196
Chapter 12 Transmitter Construction 213
Chapter 13 Modulation Equipment 272
Chapter 14 U.H.F. Receivers 285
Chapter 15 U.H.F. Transmitters and Transceivers 307
Chapter 16 Emergency and Portable 333
Chapter 17 Antenna Construction 340
Chapter 18 Measurements and Measuring Equipment 348
Chapter 19 Workshop Practice 372
Chapter 20 Tube Characteristics and Miscellaneous Data 377

OPERATING AND TRAFFIC HANDLING

Chapter 21 Operating the Station 420
Chapter 22 Regulations and Data 436
INDEX . . . . . At Rear

The Amateur's Code

1 *The Amateur is Gentlemanly.* He never knowingly uses the air for his own amusement in such a way as to lessen the pleasure of others. He abides by the pledges given by the A.R.R.L. in his behalf to the public and the Government.

2 *The Amateur is Loyal.* He owes his amateur radio to the American Radio Relay League, and he offers it his unswerving loyalty.

3 *The Amateur is Progressive.* He keeps his station abreast of science. It is built well and efficiently. His operating practice is clean and regular.

4 *The Amateur is Friendly.* Slow and patient sending when requested, friendly advice and counsel to the beginner, kindly assistance and coöperation for the broadcast listener; these are marks of the amateur spirit.

5 *The Amateur is Balanced.* Radio is his hobby. He never allows it to interfere with any of the duties he owes to his home, his job, his school, or his community.

6 *The Amateur is Patriotic.* His knowledge and his station are always ready for the service of his country and his community.

The Story of Amateur Radio

HOW IT STARTED—THE PART PLAYED BY THE ARRL

AMATEUR radio represents, to some seventy thousand people, the most satisfying, most exciting of all hobbies. Over 50,000 of these enthusiasts are located in the United States and Canada, for it is this continent which gave birth to the movement and which has ever since represented its stronghold.

When radio broadcasting was first introduced to the public some years ago, it instantly caught the fancy of millions of people all over the world. Why? Because it fired their imagination — because it thrilled them to tune in on a program direct from some distant point, to hear speech and music that was at that moment being transmitted from a city hundreds and even thousands of miles away. To be sure there was also a certain amount of entertainment value, and it is true that as the years have passed this phase has become paramount in the minds of most listeners; yet the thrill of "DX" is still a major factor in the minds of hundreds of thousands of people, as witness the present popularity of international short wave reception of foreign programs.

That keen satisfaction of hearing a distant station is basic with the radio amateur but it has long since been superseded by an even greater lure, and that is the thrill of *talking* with these distant points! On one side of your radio amateur's table is his short-wave receiver; on the other side is his private (and usually homemade) short-wave transmitter, ready at the throw of a switch to be used in calling and "working" other amateurs in the United States, in Canada, Europe, Australia, every corner of the globe!* Even a low-power transmitter makes it possible to develop friendships in every State in the Union. Of course, it is not to be expected that the first contacts will necessarily be with foreign amateurs. Experience in adjusting the simple transmitter, in using the right frequency band at the right time of day when foreign stations are on the air, and practice in operating are necessary before communication will be enjoyed with amateurs of other nationalities. But patience and experience are the sole prerequisites; neither high power nor expensive equipment is required.

Nor does the personal enjoyment that comes from amateur radio constitute its only benefit. There is the enduring satisfaction that comes from doing things with the apparatus put together by one's own skill. The process of designing and constructing radio equipment develops real engineering ability. Operating an amateur station with even the simplest equipment likewise develops operating proficiency and skill. Many an engineer, operator and executive in the commercial radio field got his practical background and much of his training from his amateur work. So, in addition to the advantages of amateur radio as a hobby, the value of systematic amateur work to a student of almost every branch of radio cannot well be overlooked. An increasing number of radio services, each expanding in itself, require additional personnel — technicians, operators, inspectors, engineers and executives — and in every field a background of amateur experience is regarded as valuable.

Amateur radio is as old as the art itself.

There were amateurs before the present century. Shortly after the late Guglielmo Marconi had astounded the world with his first experiments proving that telegraph messages actually could be sent between distant points without wires, they were attempting to duplicate his results. Marconi himself was probably the first amateur — indeed, the distinguished inventor so liked to style himself. But amateur radio as it has come to be known was born when private citizens first saw in the new marvel a means for personal communication with others and set about learning enough of the new art to build a homemade station.

Amateur radio's subsequent development may be divided into two periods: pre-war and post-war.

Pre-war amateur radio bore little resemblance to the art as it exists to-day, except in principle. The equipment, both transmitting and receiving, was of a type now long obsolete. The range of even the highest-powered transmitters, under the most favorable conditions, would be scoffed at by the rankest beginner to-day. No United States amateur had ever heard the signals of a foreign amateur, nor had any foreigner ever reported hearing an

*Because of the current international situation, communication by U. S. amateurs with foreign countries is temporarily forbidden.

American. The oceans were a wall of silence, impenetrable, isolating us from every signal abroad. Even transcontinental DX was accomplished in relays. "Short waves" meant 200 meters; the entire wavelength spectrum below 200 meters was a vast silence — no signal ever disturbed it. Years were to pass before its phenomenal possibilities were to be suspected.

Yet the period was notable for a number of accomplishments. It saw the number of amateurs in the United States increase to approximately 4,000 by 1917. It witnessed the first appearance of radio laws, licensing, wavelength specifications for the various services. ("Amateurs? — oh, yes — well, stick 'em on 200 meters: it's no good for anything; they'll never get out of their own back yards with it.") It saw an increase in the range of amateur stations to such unheard-of distances as 500 and, in some cases, even 1,000 miles, with U. S. amateurs beginning to wonder, just before the war, if there were amateurs in other countries across the seas and if — daring thought! — it might some day be possible to span the Atlantic with 200-meter equipment. Because all long-distance messages had to be relayed, this period saw relaying developed to a fine art — and what a priceless accomplishment that ability turned out to be later when the government suddenly needed dozens and hundreds of skilled operators for war service! Most important of all, the pre-war period witnessed the birth of the American Radio Relay League, the amateur organization whose fame was to travel to all parts of the world and whose name was to be virtually synonymous with subsequent amateur progress and short-wave development. Conceived and formed by the famous inventor and amateur, the late Hiram Percy Maxim, it was formally launched in early 1914 and was just beginning to exert its full force in amateur activities when the United States declared war and by that act sounded the knell for amateur radio for the next two and one-half years. By presidential direction every amateur station was dismantled. Within a few months three-fourths of the amateurs of the country were serving with the armed forces of the United States as operators and instructors.

Few amateurs to-day realize that the war not only marked the close of the first phase of amateur development but came very near marking its end for all time. The fate of amateur radio was in the balance in the days immediately following declaration of the Armistice, in 1918. The government, having had a taste of supreme authority over all communications in wartime, was more than half inclined to keep it; indeed, the war had not been ended a month before Congress was considering legislation that would have made it impossible for the amateur radio of old ever to be resumed. President Maxim rushed to Washington, pleaded, argued; the bill was defeated. But there was still no amateur radio; the war ban continued in effect. Repeated representations to Washington met only with silence; it was to be nearly a year before licenses were again issued.

In the meantime, however, there was much to be done. Three-fourths of the former amateurs had gone to France; many of them would never come back. Would those who had returned be interested, now, in such things as amateur radio? Mr. Maxim determined to find out and called a meeting of such members of the Board of Directors of the League as he could locate. Eleven men, several still in uniform, met in New York and took stock of the situation. It wasn't very encouraging: amateur radio still banned by law, former members of the League scattered no one knew where, no League, no membership, no funds. But those eleven men financed the publication of a notice to all the former amateurs that could be located, hired Kenneth B. Warner as the League's first paid secretary, floated a bond issue among old League members to obtain money for immediate running expenses, bought the magazine *QST* to be the League's official organ, and dunned officialdom until the wartime ban was lifted and amateur radio resumed again. Even before the ban was lifted, in October, 1919, old-timers all over the country were flocking back to the League, renewing friendships, planning for the future. When licensing was resumed there was a headlong rush to get back on the air.

From the start, however, post-war amateur radio took on new aspects. Wartime pressure had stimulated technical development in radio. There were new types of equipment. The vacuum tube was being used for both receiving and transmitting. Amateurs immediately adapted the new apparatus to 200-meter work. Ranges promptly increased; soon it was possible to bridge the continent with but one intermediate relay. Shortly thereafter stations on one coast were hearing those on the other direct!

These developments had an inevitable result. Watching DX come to represent 1,000 miles, then 1,500 and then 2,000, amateurs began to dream of transatlantic work. Could they get across? In December, 1921, the ARRL sent abroad one of its most prominent amateurs, Paul Godley, with the best amateur receiving equipment available. Tests were run, and thirty American amateur stations were heard in Europe! The news electrified the amateur world. In 1922 another transatlantic test was carried out; this time 315 American calls were logged by European amateurs and, what

was more, one French and two British stations were heard on this side.

Everything now was centered on one objective: two-way communication across the Atlantic by amateur radio! It *must* be possible — but somehow they couldn't quite make it. Further increases in power were out of the question; many amateurs already were using the legal maximum of one kilowatt. Better receivers? They already had the superheterodyne; it didn't seem possible to make any very great advance in that direction.

How about trying another wavelength, then?, they asked. What about those wavelengths *below* 200 meters? The engineering world said they were worthless — but then, that had been said about 200 meters, too. There have been many wrong guesses in history. In 1922 the assistant technical editor of *QST* (Phelps, now W9BP) carried on tests between Hartford and Boston on 130 meters. The results were encouraging. Early in 1923 the ARRL sponsored a series of organized tests on wavelengths down to 90 meters and it was noted that as the wavelength dropped the reported results were better. A growing excitement began to filter into the amateur ranks.

Finally, in November, 1923, after some months of careful preparation, two-way amateur communication across the Atlantic became a reality, when Schnell, 1MO (now W9UZ), and Reinartz, 1XAM (now W3IBS), worked for several hours with Deloy, 8AB, in France, all three stations using a wavelength of 110 meters! Additional stations dropped down to 100 meters and found that they, too, could easily work two-way across the Atlantic. The exodus from the 200-meter region started.

By 1924 the entire radio world was agog and dozens of commercial companies were rushing stations into the 100-meter region. Chaos threatened, until the first of a series of radio conferences partitioned off various bands of frequencies for all the different services clamoring for assignments. Although thought was still centered in 100 meters, League officials at the first of these conferences, in 1924, came to the conclusion that the surface had probably only been scratched, and wisely obtained amateur bands not only at 80 meters, but at 40 and 20 and 10 and even 5 meters.

Many amateurs promptly jumped down to the 40-meter band. A pretty low wavelength, to be sure, but you never could tell about these short waves. Forty was given a try and responded by enabling two-way communication with Australia, New Zealand and South Africa.

How about 20? It immediately showed entirely unexpected possibilities by enabling an east-coast amateur to communicate with another on the west coast, direct, at high noon. The dream of amateur radio — daylight DX! — had come true.

From that time to the present represents a period of unparalleled accomplishment. The short waves proved a veritable gold mine. Country after country came on the air, until the confusion became so great that it was necessary to devise a system of international intermediates in order to distinguish the nationality of calls. The League began issuing what are known as WAC certificates to stations proving that they had worked all the continents. Over five thousand such certificates have been issued. Representatives of the ARRL went to Paris and deliberated with the amateur representatives of twenty-two other nations. On April 17, 1925, this conference formed the International Amateur Radio Union — a federation of national amateur societies. The amateur as a type is the same the world over.

Nor has experimental development been lost sight of in the enthusiasm incident to international amateur communication. The experimentally-minded amateur is constantly at work conducting tests in new frequency bands, devising improved apparatus for amateur receiving and transmitting, learning how to operate two and three and even four stations where previously there was room enough for only one.

In particular, the amateur experimenter presses on to the development of the higher frequencies represented by the wavelengths below 10 meters, territory only a few years ago regarded even by most amateurs as comparatively unprofitable operating ground.

The amateur's experience with five meters is especially representative of his initiative and resourcefulness, and his ability to make the most of what is at hand. In 1924 first amateur experiments in the vicinity of 56 Mc. indicated the band to be practically worthless for distance work; signals at such frequencies appeared capable of being heard only to "horizon range." But the amateur turns even such apparent disadvantages to use. If not suitable for long-distance work, at least the band was ideal for "short-haul" communication. Beginning in 1931, then, there was tremendous activity in 56-Mc. work by hundreds of amateurs all over the country, and a complete new line of transmitters and receivers was developed to meet the special conditions incident to communicating at these ultra-high frequencies. In 1934 additional impetus was given to this band when experiments by the ARRL with directive antennas resulted in remarkably consistent two-way communication over distances of more than 100 miles, without the aid of "hilltop" locations. While atmospheric conditions still are found to affect 5-meter DX,

hundreds of amateurs now spend much of their time on the 56-Mc. band, some having worked as many as four or five hundred different stations at distances up to several hundred miles. Hundreds of contacts over a thousand miles or so have been made, and even transcontinental distances are spanned when conditions are right. To-day's concept of u.h.f. propagation was developed almost entirely through amateur research.

The amateur is constantly in the forefront of technical progress. Many developments by amateurs have come to represent valuable contributions to the art, and the articles about them are as widely read in professional circles as by amateurs. At a time when only a few broadcast engineers in the country knew what was meant by "100% modulation" the technical staff of the ARRL was publishing articles in *QST* urging amateur 'phones to embrace it and showing them how to do it. This is only one example; the complete record of such accomplishments would more than fill this chapter alone. From the League's laboratory in 1932 came the single-signal superheterodyne — the world's most advanced high-frequency radiotelegraph receiver. In 1936 the "noise-silencer" circuit for superheterodynes was developed, permitting for the first time satisfactory high-frequency reception through the more common forms of man-made electrical interference. Currently amateurs are contributing to frequency modulation and television development.

Amateur radio is one of the finest of hobbies, but this fact alone would hardly merit such whole-hearted support as was given it by the United States government at recent international conferences. There must be other reasons to justify such backing. One of these is a thorough appreciation by the Army and Navy of the value of the amateur as a source of skilled radio personnel in time of war. The other is best described as "public service."

We have already seen 3,500 amateurs contributing their skill and ability to the American cause in the Great War. After the war it was only natural that cordial relations should prevail between the Army and Navy and the amateur. Several things occurred in the next few years to strengthen these relations. In 1924, when the U. S. dirigible *Shenandoah* made a tour of the country, amateurs provided continuous contact between the big ship and the ground. In 1925 when the United States battle fleet made a cruise to Australia and the Navy wished to test out short-wave apparatus for future communication purposes, it was the League's Traffic Manager who was in complete charge of an experimental high-frequency set on the U. S. S. *Seattle*.

Definite friendly relations between the amateur and the armed forces of the Government were cemented in 1925. In this year both the Army and the Navy came to the League with proposals for amateur coöperation. The radio Naval Reserve and the Army-Amateur Net are the outgrowth of these proposals. Thousands of amateurs in the Naval Reserve are now on active duty with the Navy, while other thousands are serving in the other branches of the service.

The public service record of the amateur is a brilliant one. These services can be roughly divided into two classes: emergencies and expeditions. It is regrettable that space limitations preclude detailed mention of amateur work in both these classes, for the stories constitute highlights of amateur accomplishment.

Since 1913, amateur radio has been the principal, and in many cases the only, means of outside communication in more than one hundred storm, flood and earthquake emergencies in this country. Among the most noteworthy were the Florida hurricanes of 1926, 1928 and 1935, the Mississippi and New England floods of 1927 and the California dam break of 1928. During 1931 there were the New Zealand and Nicaraguan earthquakes, and in 1932 floods in California and Texas. Outstanding in 1933 was the earthquake in southern California. In 1934 further floods in California and Oklahoma resulted in notable amateur coöperation. The 1936 eastern states flood, the 1937 Ohio River valley flood, and the 1938 southern California flood and Long Island-New England hurricane disaster saw the greatest emergency effort ever performed by amateurs. In all these and many others, amateur radio played a major rôle in the rescue work and amateurs earned world-wide commendation for their resourcefulness in effecting communication where all other means failed.

During 1938 the ARRL inaugurated its emergency preparedness program, providing for the appointment of regional and local Emergency Coördinators to organize amateur facilities and establish liaison with other agencies. This was in addition to the registration of personnel and equipment in the Emergency Corps. A comprehensive program of coöperation with the Red Cross, Western Union and others was put into effect.

Amateur coöperation with expeditions goes back to 1923, when a League member, Don Mix of Bristol, Conn., accompanied MacMillan to the Arctic on the schooner *Bowdoin* with an amateur station. Amateurs in Canada and the United States provided the home contact. The success of this venture was such that other explorers made inquiry of the League regarding similar arrangements for their journeys. In 1924 another expedition secured amateur coöperation; in 1925 there

were three, and by 1928 the figure had risen to nine for that year alone. Each year since then has seen League headquarters in receipt of requests for such service, until now a total of perhaps two hundred voyages and expeditions have been thus assisted. To-day practically no exploring trip starts from this country to remote parts of the world without making arrangements to keep in contact through the medium of amateur radio.

Emergency relief, expeditionary contact, experimental work and countless instances of other forms of public service — rendered, as they always have been and always will be, without hope or expectation of material reward — have made amateur radio an integral part of our national life.

THE AMERICAN RADIO RELAY LEAGUE

The American Radio Relay League is to-day not only the spokesman for amateur radio in this country but it is the largest amateur organization in the world. It is strictly of, by and for amateurs, is non-commercial and has no stockholders. The members of the League are the owners of the ARRL and *QST*.

The League is organized to represent the amateur in legislative matters. It is pledged to promote interest in two-way amateur communication and experimentation. It is interested in the relaying of messages by amateur radio. It is concerned with the advancement of the radio art. It stands for the maintenance of fraternalism and a high standard of conduct. One of its principal purposes is to keep amateur activities so well conducted that the amateur will continue to justify his existence. As an example of this might be cited the action of the League in sponsoring the establishment of a system of official observers throughout the United States.

The operating territory of the League is divided into fourteen United States and six Canadian divisions. The affairs of the League are managed by a Board of Directors. One director is elected every two years by the membership of each United States division, and a Canadian General Manager is elected every two years by the Canadian membership. These directors then choose the president and vice-president, who are also directors, of course. No one commercially engaged in selling or manufacturing radio apparatus or literature can be a member of the Board or an officer of the League.

The president, vice-president, secretary, treasurer and communications manager of the League are elected or appointed by the Board of Directors. These officers constitute an Executive Committee which, under certain restrictions, decides how to apply Board policies to matters arising between Board meetings.

The League owns and publishes the magazine *QST*. *QST* goes to all members of the League each month. It acts as a monthly bulletin of the League's organized activities. It serves as a medium for the exchange of ideas. It fosters amateur spirit. Its technical articles are renowned. *QST* has grown to be the "amateur's bible" as well as one of the foremost radio magazines in the world. The profits *QST* makes are used in supporting League activities. Membership dues to the League include a subscription to *QST* for the same period.

The extensive field organization of the Communications Department coördinates operating activities throughout North America.

HEADQUARTERS

From the humble beginnings recounted in this story of amateur radio, League headquarters has grown until now it occupies an entire office building and employs nearly forty people.

Members of the League are entitled to write to Headquarters for information of any kind, whether it concerns membership, legislation, or general questions on the construction or operation of amateur apparatus. If you don't find the information you want in *QST* or the *Handbook*, write to ARRL Headquarters, West Hartford, Connecticut, telling us your problem. All replies are made directly by letter; no charge is made for the service.

If you come to Hartford, drop out to Headquarters at 38 LaSalle Road, West Hartford. Visitors are always welcome.

HEADQUARTERS STATIONS

From 1927 to 1936 the League operated its headquarters station, W1MK, at Brainerd Field, Hartford's municipal airport on the Connecticut River. During the disastrous flood of 1936 this station was devastated. From the spring of 1936 until early summer of 1938 a temporary station was operated at the headquarters offices, at first under the old auxiliary call W1INF and later as W1AW. The call W1AW, held until his death by Hiram Percy Maxim, was issued to the League by a special order of the Federal Communications Commission for the official headquarters station call.

Beginning September, 1938, the Hiram Percy Maxim Memorial Station at Newington, Conn., has been in operation as the headquarters station. Operating on all amateur bands, with separate transmitters rated at the maximum legal input of one kilowatt, and elaborate antenna systems, this station is heard with good strength in every part of the world. The building in which it is housed was designed by order of the League's Board of Directors as a

permanent memorial to its founder-president, Hiram Percy Maxim.

JOINING THE LEAGUE

The best way to get started in the amateur game is to join the League and start reading *QST*. Inquiries regarding membership should be addressed to the Secretary. There is a convenient application blank in the rear of this book. An interest in amateur radio is the only qualification necessary in becoming an associate member of the ARRL. Ownership of a station and knowledge of the code are *not* prerequisites. They can come later. According to a constitutional requirement, however, only those members who possess an amateur station or operator license are entitled to full membership and to vote in director elections.

Learn to let the League help you. It is organized solely for that purpose, and its entire headquarters' personnel is trained to render the best assistance it can to you in solving your amateur problems. If, as a beginner, you should find it difficult to understand some of the matter contained in succeeding chapters of this book, do not hesitate to write the Information Service stating your trouble. Perhaps it would be profitable for you to send for a copy of a booklet published by the League especially for the beginner and entitled "How to become a Radio Amateur." This is written in simple, straightforward language, and describes from start to finish the building of a simple but effective amateur installation. The price is 25 cents, postpaid.

Every amateur should read the League's magazine *QST* each month. It is filled with the latest amateur apparatus developments and "ham" news from your particular section of the country. A sample copy will be sent you for 25 cents if you are unable to obtain one at your local newsstand.

INTERNATIONAL AMATEUR RADIO UNION

The IARU is a federation of thirty-three national amateur radio societies in the principal nations of the world. Its purposes are the promotion and coördination of two-way communication between the amateurs of the various countries, the effecting of coöperative agreements between the various national societies on matters of common welfare, the advancement of the radio art, the encouragement of international fraternalism, and the promotion of allied activities. Perhaps its greatest service lies in representing the amateurs of the world at international telecommunications conferences and technical consulting committee CCIR meetings.

The headquarters society of the Union is the American Radio Relay League. All correspondence should be addressed to 38 LaSalle Road, West Hartford, Conn., U. S. A.

The IARU issues WAC (Worked-All-Continents) certificates to amateurs who qualify for this award. The regulations, in brief, stipulate that the applicant must have worked other amateurs in each of the six recognized continental areas of the world, supplying QSL cards or other indisputable proof of two-way contact in connection with his application; and that he must be a member of the member-society of the Union for the country in which he resides. In countries where no member-society exists the certificate may be secured upon payment of a fee of 50¢ to cover mailing costs. Two kinds of certificates are issued, one for radiotelegraph work and one for radiotelephone. There is a special endorsement for 28-Mc. operation.

CHAPTER ONE

Getting Started

●1-1 AMATEUR RADIO

To UNDERSTAND amateur radio, it is first necessary to know where amateurs operate. There are those who, because they have never heard anything else, think that "radio" means only "broadcasting." To such people a few nights listening in on the high frequencies (wavelengths below the broadcast band) will be a revelation. A horde of signals from dozens of different types of services tell their story to whoever will listen. Some stations send slowly and leisurely. Even the beginner can read them. Others race along furiously so that whole sentences become meaningless buzzes. There are both telegraph and telephone signals. Press messages, weather reports, high-frequency international broadcasting of voice and music, transmissions from government and experimental stations including picture transmissions and television, airplane dispatching, police calls, signals from private yachts and expeditions exploring the remote parts of the earth — these jam the short-wave spectrum from one end to the other.

Sandwiched in among all these services are the amateurs, the largest service of all. Thousands of their signals may be heard every night in the various bands set apart by international treaty for their use.

●1-2 THE AMATEUR BANDS

Many factors must be considered in picking the proper band for a certain job from among the several bands devoted to amateur operation. The distance to be covered enters into it, as well as the time of day when communication is desired. In addition to daily changes there are seasonal changes, and also a long-time change in atmospheric conditions which seems to coincide with the 11-year cycle of sun-spot or solar activity. The reliability of communication on a given frequency at a given time of day, the suitability of a given band for traffic or DX, the desires of the individual amateur in choosing his circle of friends with whom he expects to make contact on schedule, the amount of interference to be expected at certain hours, and the time of day available for operating — all influence the choice of an operating frequency.

The 1750-kc. band, which carried all amateur activity before experimenters opened the way to each of the higher frequency bands in turn, has always served amateurs well for general contact between points all over the country. There was a short period, during the height of development of the higher frequencies, when activity in this band dwindled, but it is again active.

The band is especially popular for radiotelephone work. It is also being used extensively by organized c.w. nets. Code practice transmissions are made in this band for beginning amateurs and many beginners may be heard in this region making their first two-way contact with each other. The band is one of our "widest" from the standpoint of the number of stations that may be comfortably accommodated. It is open to amateur facsimile and picture transmission.

The 3500-kc. band has, in recent years, been regarded as best for all consistent domestic communication. It is good for coast-to-coast work at night all the year except for a few summer months. It has been recommended for all amateur message-handling over medium distances (1,000 miles, for example). Much of the friendly human contact between amateurs takes place in the 3500-kc. band. As the winter evening advances, the well-known "skip effect" (explained in detail in Chapter Nine) of the higher frequencies has made itself known, the increased range of the "sky wave" brings in signals from the other coast and the increased range also brings in *more* stations, so that the band appears busier.

The 7000-kc. band has been the most popular band for general amateur work for years. It is useful mainly at night for contacts over considerable distances. Power output does not limit the range of a station to the same extent as when working on the lower frequency bands discussed above. However, the band is more handicapped by congestion in the early evenings and more subject to the vagaries of skip-effect and uncertain transmission conditions than are the lower frequency bands, but not to the same extent as the 14-Mc. band. The 7000-kc. band is satisfactory for working distances of several hundred miles in daylight. It is generally considered the most desirable night band for general DX work in spite of difficulties due to interference.

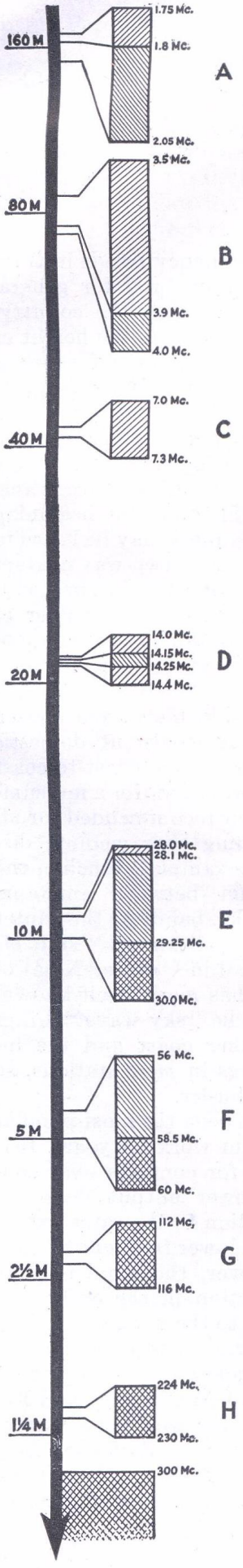

Fig. 1 — The Amateur Bands. Areas shaded with diagonal lines sloping down to left are open to c.w. telegraphy only. Areas with diagonal lines sloping to right are also open to amplitude-modulated telephony (as well as c.w.). Cross-hatched areas are open to frequency-modulated telephony (as well as ordinary 'phone and c.w.).

Note: For changes in these assignments as a result of special temporary regulations promulgated by FCC in the interest of national defense, see Chapter Twenty-Two, section on amateur regulations.

The 14,000-kc. or 14-Mc. band is the best frequency to use to cover great distances in daylight. In fact it is the *only* band generally useful for daylight DX contacts (QSO's) over coast-to-coast and greater distances. Communication over long distances will usually remain good during the early evenings and surprising results can be obtained then, too. Using these higher frequencies there is often difficulty in talking with stations within three or four hundred miles, while greater distances than this (and very short distances within ten or twenty miles of a station) can be covered with ease. The reason that 14-Mc. signals are less useful for general amateur DX late evenings is because the "skip" increases during darkness until the "sky wave" covers greater than earthly distances. The band, while one of the very best for the amateur interested in working foreign stations, is subject to sudden changes in transmitting conditions.

The 28,000-kc. (28-Mc.) band combines both the long-distance characteristics of the 14-Mc. band and some of the local advantages of the 56-Mc. band, but its remarkable long-distance characteristics have been the cause of its popularity. The band is by no means as reliable as those of lower frequency but the performance to be had on it has been quite satisfactory during the last few years. A well-defined seasonal effect produces much better conditions during the fall and spring than at other times of the year. Though the band was a barren waste a few years ago it is now, particularly during fall and spring, full of activity. It is the place where one can get by far the most miles per watt.

The 56,000-kc. or 56-Mc. band is used largely for local and short-distance work over distances of ten to fifty miles. Because of the compactness and ease of construction of the necessary apparatus, it has proved ideal for this purpose and many hundreds of stations operate "locally" there. Experiments with directive antennas by the technical staff of the ARRL beginning in 1934 disclosed that surprisingly consistent two-way contact could be maintained over distances of a hundred miles or more with suitable conditions and equipment, and such contacts are now common. The prospect of periodic "sky-wave" DX work over several thousand miles on this band make it a prize one for the experimenter.

The 112,000-kc. or 112-Mc. band is the newest addition to the amateur spectrum, and is now the scene of widespread occupancy. Its characteristics insofar as local work is concerned are similar to 56 Mc. The fact that elementary transceivers can be used, without the stability requirements of the lower frequencies, makes the band especially attractive for mobile work and general short-range activity. It is becoming an increasingly important member of the amateur family.

As yet the 224-Mc. band and the experimental region above 300 Mc. are not used for general communication, but it is logical to expect increasing occupancy there in the future, as the trend of the radio art to the higher frequencies achieves headway. Experimenters are urged to investigate this region.

● 1-3 MEMORIZING THE CODE

There is nothing particularly difficult incident to taking your place in the ranks of licensed amateurs.

The first job you should tackle is the business of *memorizing* the code. This can be done while you are building your receiver. Thus, by the time the receiver is finished, you will know the characters for the alphabet and will be ready to practice receiving in order to acquire speed. Speed practice, either by means of a buzzer, or

A	• —	dit–dah
B	— • • •	dah–dit–dit–dit
C	— • — •	dah–dit–dah–dit
D	— • •	dah–dit–dit
E	•	dit
F	• • — •	dit–dit–dah–dit
G	— — •	dah–dah–dit
H	• • • •	dit–dit–dit–dit
I	• •	dit–dit
J	• — — —	dit–dah–dah–dah
K	— • —	dah–dit–dah
L	• — • •	dit–dah–dit–dit
M	— —	dah–dah
N	— •	dah–dit
O	— — —	dah–dah–dah
P	• — — •	dit–dah–dah–dit
Q	— — • —	dah–dah–dit–dah
R	• — •	dit–dah–dit
S	• • •	dit–dit–dit
T	—	dah
U	• • —	dit–dit–dah
V	• • • —	dit–dit–dit–dah
W	• — —	dit–dah–dah
X	— • • —	dah–dit–dit–dah
Y	— • — —	dah–dit–dah–dah
Z	— — • •	dah–dah–dit–dit

1	• — — — —	dit–dah–dah–dah–dah
2	• • — — —	dit–dit–dah–dah–dah
3	• • • — —	dit–dit–dit–dah–dah
4	• • • • —	dit–dit–dit–dit–dah
5	• • • • •	dit–dit–dit–dit–dit
6	— • • • •	dah–dit–dit–dit–dit
7	— — • • •	dah–dah–dit–dit–dit
8	— — — • •	dah–dah–dah–dit–dit
9	— — — — •	dah–dah–dah–dah–dit
0	— — — — —	dah–dah–dah–dah–dah

Period	• — • — • —
Comma	— — • • — —
Question mark	• • — — • •
Error	• • • • • • • •
Double dash	— • • • —
Wait	• — • • •
End of message	• — • — •
Invitation to transmit	— • —
End of work	• • • — • —

Fig. 2 — The Continental Code.

by listening in on your receiver, can be indulged in in odd moments while the transmitter, in turn, is being constructed. The net result of such an organized program should be that by the time the transmitter is finished you will be able to receive the thirteen words a minute required by the government for your amateur operator license, and can immediately proceed to study for the "theoretical" part of your license examination without loss of time.

Memorizing the code is no task at all if you simply make up your mind to apply yourself to the job and get it over with as quickly as possible. The complete Continental alphabet, punctuation marks and numerals are shown in the table given here. The alphabet and all the numerals should be learned. Start by memorizing the alphabet, forgetting the numerals and punctuation marks for the present. Various good systems for learning the code have been devised. They are of undoubted value but the job is a very simple one and usually can be accomplished easily by taking the first five letters, memorizing them, then the next five, and so on. As you progress you should review all the letters learned up to that time, of course. When you have memorized the alphabet you can go to the numerals, which will come very quickly since you can see that they follow a definite system. The punctuation marks wind up the schedule.

One suggestion: Learn to think of the letters in terms of *sound* rather than their appearance as they are printed. Don't think of *A* as "dot-dash" but think of it as the sound "dit-dah." *B*, of course, is "dah-dit-dit-dit," *C*, "dah-dit-dah-dit" and so on.

Even better will be listening to the characters as they are sent on a buzzer or code practice oscillator, if someone can be found to send to you. Learning the code is like learning a new language, and the sooner you learn to understand the language without mental "translation" the easier it will be for you.

Don't think about speed yet. Your first job is simply to memorize all the characters and make sure you know them without hesitation.

1-4 ACQUIRING SPEED BY BUZZER PRACTICE

When the code is thoroughly memorized, you can start to develop speed in receiving code transmission. Perhaps the best way to do this is to have two people learn the code together and send to each other by means of a buzzer-and-key outfit. An advantage of this system is that it develops sending ability, too, for the person doing the receiving will be quick to criticize uneven or indistinct sending. If possible, it is a good idea to get the aid of an experienced operator for the first few sessions, so you will know how well-sent characters sound.

The diagram shows the connections for a buzzer-practice set. When buying the key it is a good idea to get one that will be suitable for use later; this will save you money.

Another good practice set for two people learning the code together is that using a

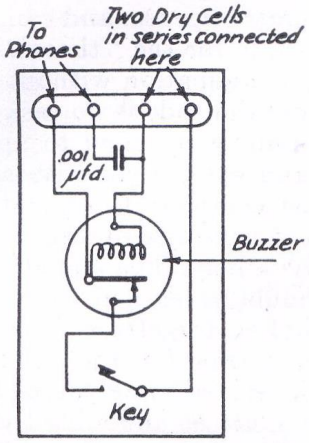

Fig. 3 — Circuit of a buzzer code practice set. The headphones are connected across the coils of the buzzer with a condenser in series. The size of this condenser determines the strength of the signal in the 'phones. If the value shown gives an excessively loud signal, it may be reduced to 500 μμfd. or even 250 μμfd.

vacuum-tube audio oscillator. The parts required are: a pair of 'phones, key, type 1G4G tube, an old audio transformer, grid leak and condenser, tube socket, No. 6 dry cell and 22½-volt B battery. If nothing is heard in the 'phones when the key is depressed, reverse the leads going to either transformer winding. Reversing both sets of leads will have no effect.

Either the buzzer set or the audio oscillator described will give satisfactory results. The advantage of an audio oscillator over the buzzer set is that it gives a good signal in the 'phones without making any noise in the room, and also produces a tone more closely simulating actual radio signals.

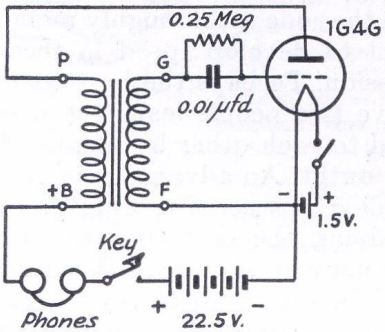

Fig. 4 — Wiring diagram of a simple audio oscillator for use as a code practice set.

After the practice set has been built, and another operator's help secured, practice sending turn and turn about to each other. Send single letters at first, the listener learning to recognize each character quickly, without hesitation. Following this, start slow sending of complete words and sentences, always trying to have the material sent at just a little faster rate than you can copy easily; this speeds up your mind. Write down each letter you recognize. Do *not* try to write down the dots and dashes; write down the letters. Don't stop to compare the sounds of different letters, or think too long about a letter or word that has been missed. Go right on to the next one or each "miss" will cause you to lose several characters you might otherwise have gotten. If you exercise a little patience you will soon be getting every character, and in a surprisingly short time will be receiving at a good rate of speed. When you think you can receive 13 words a minute (65 letters a minute) have the sender transmit code groups rather than straight English text. This will prevent you from recognizing a word "on the way" and filling it in before you've really listened to the letters themselves.

After you have acquired a reasonable degree of proficiency concentrate on the less common

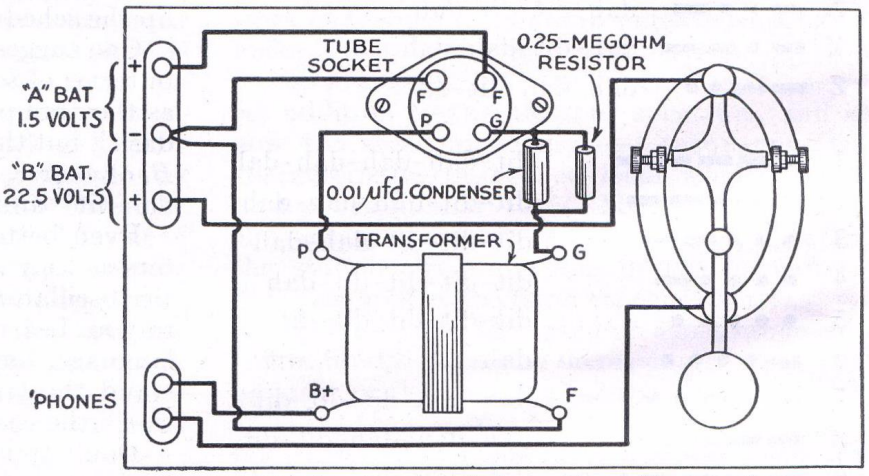

Fig. 5 — Layout of the audio-oscillator code practice set. All parts can be screwed onto a wooden baseboard approximately 5 x 7 inches.

characters, as well as the numerals and punctuation marks. These prove the downfall of many applicants taking the code examination under the handicap of nervous stress.

●1-5 LEARNING BY LISTENING

While it is best to get the help of another person in sending to you while you are acquiring code-speed, it is not always possible to do so, and some other method of acquiring speed must be resorted to. Under such circumstances, the time-honored system is to "learn by listening" on your short-wave receiver. W1AW sends nightly code practice transmissions at

various speeds beginning at 15 w.p.m. The latest issue of *QST* contains schedules. With even the simplest short-wave receivers a number of high-power stations can be heard. It is usually possible to pick a station going at about the desired speed for code practice. Listen to see if you cannot recognize some individual letters. Write down the letters as you hear them. Try to copy as many letters as you can.

Whenever you hear a letter that you know, write it down. Keep everlastingly at it. *Twenty minutes or half an hour is long enough for one session.* This practice may be repeated several times a day. Don't become discouraged. Soon you will copy without missing so many letters. Then you will begin to get calls, which are repeated several times, and whole words like "and" and "the." After words will come sentences. You now know the code and your speed will improve slowly with practice.

In "learning by listening" try to pick stations sending slightly faster than your limit. In writing, try to make the separation between words definite. Try to "read" the whole of short words before starting to write them down. Do the writing while listening to the first part of the next word. Practice and patience will soon make it easy to listen and write at the same time. Good operators usually copy several words "behind" the incoming signals.

A word of caution: the U. S. radio communication laws prescribe heavy penalties for divulging the contents of any radiogram to other than the addressee. You may copy anything you hear in the amateur bands for practice but you must preserve its secrecy.

● 1-6 VOLUNTEER CODE PRACTICE STATIONS

Each fall and winter season the ARRL solicits volunteers, amateurs using code only or often a combination of voice and code transmission, who send transmissions especially calculated to assist beginners. These transmissions go on the air at specified hours on certain days of the week and may be picked up within a radius of several hundred miles under favorable conditions. Words and sentences are sent at different speeds and repeated by voice, or checked by mail for correctness if you write the stations making the transmissions and enclose a stamped, addressed envelope for reply.

The schedules of the score or more volunteer code-practice stations are listed regularly in *QST* during the fall and winter. Information at other times may be secured by writing League headquarters. Some of the stations have been highly successful in reaching both coasts with code-practice transmissions from the central part of the country.

● 1-7 INTERPRETING WHAT YOU HEAR

As soon as you finish your receiver and hook it up you will begin to pick up different high-frequency stations, some of them perhaps in the bands of frequency assigned to amateurs, others perhaps commercial stations belonging to different services. The loudest signals will not necessarily be those from near-by stations. Depending on transmitting conditions which vary with the frequency, the distance and the time of day, remote stations may or may not be louder than relatively near-by stations.

The first letters you identify probably will be the call signals identifying the stations called and the calling stations, if the stations are in the amateur bands. Station calls are assigned by the government, prefixed by a letter (W in the United States, VE in Canada, G in England, etc.) indicating the country. In this country amateur calls will be made up of such combinations as W8CMP, W1KH, W1AW, etc., the number indicating the amateur call area and giving a general idea of the part of the country in which the station heard is located. The reader is referred to the chapter on "Operating a Station" for complete information on the procedure amateurs use in calling, handling messages, and the like. Many abbreviations are used which will be made clear by reference to the tables of Q Code, miscellaneous abbreviations, and "ham" abbreviations included in the Appendix. The table of international prefixes, also in the back of the book, will help to identify the country where amateur and commercial stations are located.

● 1-8 USING A KEY

The correct way to grasp the key is important. The knob of the key should be about eighteen inches from the edge of the operating table and about on a line with the operator's right shoulder, allowing room for the elbow to rest on the table. A table about thirty inches in height is best. The spring tension of the key varies with different operators. A fairly heavy spring at the start is desirable. The back adjustment of the key should be changed until there is a vertical movement of about one-sixteenth inch at the knob. After an operator has mastered the use of the hand key the tension should be changed and can be reduced to the minimum spring tension that will cause the key to open immediately when the pressure is released. More spring tension than necessary causes the expenditure of unnecessary energy. The contacts should be spaced by the rear screw on the key only and not by allowing play in the side screws, which are provided merely for aligning the contact points. These side screws should be screwed up to a setting which prevents appreciable side play but not

adjusted so tightly that binding is caused. The gap between the contacts should always be at least a thirty-second of an inch, since a too-finely spaced contact will cultivate a nervous style of sending which is highly undesirable. On the other hand too-wide spacing (much over one-sixteenth inch) may result in unduly heavy or "muddy" sending.

Do not hold the key tightly. Let the hand rest lightly on the key. The thumb should be

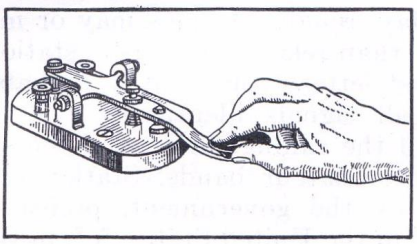

Fig. 6 — Illustrating the correct position of the hand and fingers in using a telegraph key.

against the left side of the key. The first and second fingers should be bent a little. They should hold the middle and right sides of the knob, respectively. The fingers are partly on top and partly over the side of the knob. The other two fingers should be free of the key. Fig. 6 shows the correct way to hold a key.

A wrist motion should be used in sending. The whole arm should not be used. One should not send "nervously" but with a steady flexing of the wrist. The grasp on the key should be firm, not tight, or jerky sending will result. None of the muscles should be tense but they should all be under control. The arm should rest lightly on the operating table with the wrist held above the table. An up-and-down motion without any sideways action is best. The fingers should never leave the key knob.

• 1-9 SENDING

Good sending *seems* easier than receiving, but don't be deceived. A beginner should not send fast. Keep your transmitting speed down to the receiving speed, and bend your efforts to sending *well.*

When sending do not try to speed things up too soon. A slow, even rate of sending is the mark of a good operator. Speed will come with time alone. Leave special types of keys alone until you have mastered the knack of properly handling the standard-type telegraph key. Because radio transmissions are seldom free from interference, a "heavier" style of sending is best to develop for radio work. A rugged key of heavy construction will help in this.

• 1-10 OBTAINING GOVERNMENT LICENSES

When you are able to copy 13 words per minute, have studied basic transmitter theory and familiarized yourself with the radio law and amateur regulations, you are ready to give serious thought to securing the government combination amateur operator-station license which is issued you, after examination, through the Federal Communications Commission, at Washington, D. C.

Because a discussion of license application procedure, license renewal and modification, exemptions, and detailed information on the nature and scope of the license examination involve more detailed treatment than it is possible to give within the limitations of this chapter, it has been made the subject of a special booklet published by the League, and at this point the beginning amateur should possess himself of a copy and settle down to a study of its pages in order to familiarize himself with the intricacies of the law and prepare himself for his test. The booklet, "*The Radio Amateur's License Manual,*" may be obtained from ARRL headquarters for 25¢ postpaid. One of the most valuable features of this book is its representative examination questions with their correct answers.

While no government licenses are necessary to operate receivers in the United States, you positively must have the required amateur licenses before doing sending of any kind with a transmitter. This license requirement applies for any kind of transmitter on any wavelength. Attempts to engage in transmitting operation of any kind, without holding licenses, will inevitably lead to arrest, and fine or prison.

Amateur licenses are free, but are issued only to citizens of the United States; this applies both to the station authorization and the operator's personal license, with the further provision in the station license that it will not be issued where the apparatus is to be located on premises controlled by an alien. But the requirement of citizenship is the only limitation, and amateur licenses are issued without regard to age or physical condition to anyone who successfully completes the examination.

Persons who would like to operate at amateur stations, but do not have their own station as yet, may obtain an amateur operator license without being obliged to take out a station license. But no one may take out the station license alone; all those wishing station licenses must also take out operator licenses.

Extracts from the basic Communications Act and the amateur regulations current at the time this *Handbook* went to press will be found in Chapter Twenty-Two.

CHAPTER TWO

Electrical and Radio Fundamentals

• 2-1 FUNDAMENTALS OF A RADIO SYSTEM

THE BASIS of radio communication is the transmission of electromagnetic waves through space. The production of suitable waves constitutes radio transmission, and their detection, or conversion at a distant point into the intelligence put into them at the originating point, is radio reception. There are several distinct processes involved in the complete chain. At the transmitting point, it is necessary first to generate power in such form that when it is applied to an appropriate radiator, called the antenna, it will be sent off into space in electromagnetic waves. The message to be conveyed must be superimposed on that power by suitable means, a process called modulation.

As the waves spread outward from the transmitter they rapidly become weaker, so at the receiving point an antenna is again used to abstract as much energy as possible from them as they pass. The wave energy is transformed into an electric current which is then amplified, or increased in amplitude, to a suitable value. Then the modulation is changed back into the form it originally had at the transmitter. Thus the message becomes intelligible.

Since all these processes are performed by electrical means, a knowledge of the basic principles of electricity is necessary to understand them. These essential principles are the subject of the present chapter.

• 2-2 THE NATURE OF ELECTRICITY

Electrons — All matter — solids, liquids and gases — is made up of fundamental units called *molecules*. The molecule, the smallest subdivision of a substance retaining all its characteristic properties, is constructed of *atoms* of the elements comprising the substance.

Atoms in turn are made up of particles, or charges, of electricity, and atoms differ from each other chiefly in the number and arrangement of these charges. The atom has a nucleus containing both positive and negative charges, with the positive predominating so that the nature of the nucleus is positive. The charges in the nucleus are closely bound together. Exterior to the nucleus are negative charges — electrons — some of which are not so closely bound and can be made to leave the vicinity of the nucleus without too much urging. These electrons whirl around the nucleus like the planets around the sun, and their orbits are not random paths but geometrically-regular ones determined by the charges on the nucleus and the number of electrons. Ordinarily the atom is electrically neutral, the outer negative electrons balancing the positive nucleus, but when something disturbs this balance electrical activity becomes evident, and it is the study of what happens in this unbalanced condition that makes up electrical theory.

Insulators and Conductors — Materials which will readily give up an electron are called conductors, while those in which all the electrons are firmly bound in the atom are called insulators. Most metals are good conductors, as are also acid or salt solutions. Among the insulators are such substances as wood, hard rubber, bakelite, quartz, glass, porcelain, textiles, and many other non-metallic materials.

Resistance — No substance is a perfect conductor — a "perfect" conductor would be one in which an electron could be detached from the atom without the expenditure of energy — and there is also no such thing as a perfect insulator. The measure of the difficulty in moving an electron by electrical means is called resistance. Good conductors have low resistance, good insulators very high resistance. Between the two are materials which are neither good conductors nor good insulators, but they are nonetheless useful since there is often need for intermediate values of resistance in electrical circuits.

Circuits — A circuit is simply a complete path along which electrons can transmit their charges. There will normally be a source of energy (a battery, for instance) and a *load* or portion of the circuit where the current is made to do useful work. There must be an unbroken path through which the electrons can transmit their charges, with the source of energy acting as an electron pump and sending them around the circuit. The circuit is said to be *open* when no charges can move, due to a break in the path. It is *closed* when no break exists — when switches are closed and all connections are properly made.

• 2-3 STATIC ELECTRICITY

The electric charge — Many materials that have a high resistance can be made to acquire

a charge (surplus or deficiency of electrons) by mechanical means such as friction. The familiar crackling when a hard-rubber comb is run through hair on a dry winter day is an example of an electric charge generated by friction. Objects can have either a surplus or a deficiency of electrons — it is called a *negative* charge if there is a surplus of electrons; a *positive* charge if there is a lack of them. As with all things in nature, there must always be a balance, and for every negative charge there will be found a similar positive charge, since each electron that leaves an atom to form a negative charge leaves the rest of the atom with a positive charge. The kind of charge is called *polarity*, a negative charge constituting a negative *pole*, a positive charge being a positive pole.

Attraction and repulsion — Unlike charges (one positive, one negative) exert an attraction on each other. This can be demonstrated by

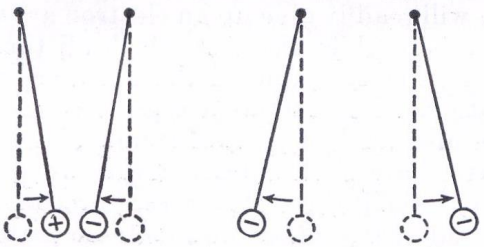

Fig. 201 — Attraction and repulsion of charged objects, as shown by the pith-ball experiment.

giving equal but opposite charges to two very light objects of insulating material (pith balls are used in the classical experiment) and suspending them near each other. They will be drawn toward each other, and if they touch the charges will neutralize, leaving both objects without charge. Charges of the same type, however, repel each other, and a similar experiment with like-charged objects will show them tending to swing apart.

Electrostatic field — From the foregoing it is evident that an electric charge can exert a force through the space surrounding the charged object. The region in which this force is exerted is considered to be pervaded by the *electrostatic field*, this concept of a field being

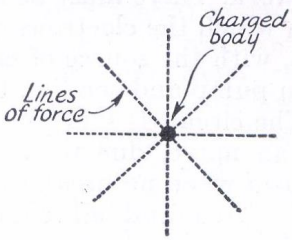

Fig. 202 — Lines of force from a charged object extend outward radially. Although only two dimensions are shown, the field extends in all directions from the charge, and the field should be visualized in three dimensions.

adopted to explain the "action at a distance" of the charge. The field is assumed to consist of *lines of force* originating on the charge and spreading in all directions. The number of lines of force per unit area is a measure of the intensity of the field.

Potential difference — If two objects are charged differently, a *potential difference* is said to exist between them, and this difference is measured by an electrical unit called the *volt*. The greater the potential difference, the higher (numerically) the voltage. This potential difference or voltage exerts an electrical pressure or *force* as explained above, and for this reason it is often called *electromotive force* or, simply, *e.m.f.* It is not necessary to have unlike charges to have a difference of potential; both, for instance, may be negative so long as one charge is more intense than the other. From the viewpoint of the stronger charge, the weaker one appears to be positive in such a case, since it has a smaller number of excess electrons, in other words, its *relative polarity* is positive. The greater the potential difference the more intense is the electrostatic field between the two charged objects.

Capacity — If two metal plates are separated a short distance by a high-resistance material, such as glass, mica, oil or air, it will be found that the two plates can be given a charge by connecting them to a source of potential difference. Such a device is called a *condenser*, and the insulating material between the metal plates is called the *dielectric*. The potential difference, or voltage, of the charge will be equal to that of the source. The *quantity* of the charge will depend upon the voltage of the charging source and the *capacity* of the condenser. The value of capacity of a condenser is a constant depending upon the physical dimensions, increasing with the area of the plates and the thinness and *dielectric constant* of the insulating material in between. The dielectric constant of air is 1, while for other insulating materials it is usually higher. Glass, for instance, has a dielectric constant of about 4; this means, simply, that if glass is substituted for air as the dielectric in an otherwise identical condenser, the capacity of the condenser will be four times as great.

Capacity is measured in *farads*, a unit much too large for practical purposes, and in radio work the terms *microfarad* (abbreviated *μfd.*) and *micro-microfarad* (*μμfd.*) are used. The microfarad is one-millionth of a farad, and the micro-microfarad is one-millionth of a microfarad.

The electrical energy in a charged condenser is considered to be stored in much the same way that mechanical energy is stored in a stretched spring or rubber band. Whereas the mechanical energy in the spring can be stored

because of the elasticity of the material, the electrical energy in a condenser is stored in the electrostatic field between the plates.

Condensers — The construction of a condenser is determined by the use for which it is intended. Where the capacity must be continuously adjustable, as in tuning radio circuits, sets of interleaved metal vanes are used with air as the dielectric. In high capacity units

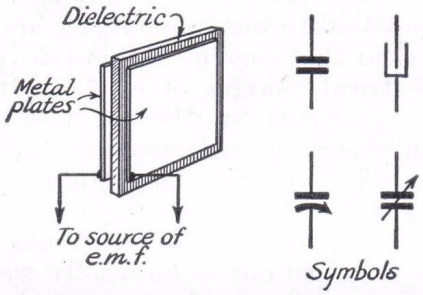

Fig. 203 — A simple type of condenser, consisting of two metal plates with dielectric material between. The diagrammatic symbols for condensers are shown at the right. The two at the top indicate condensers of fixed capacity, the two below, condensers whose capacity is variable. The symbols in the left hand column are more commonly used.

where adjustment is not required, the dielectric may be thin paper or mica. The choice of a dielectric and its thickness is determined by the capacity desired, the voltage for which the condenser is intended and, in many cases, by the losses in the dielectric, since the electrical stress caused by the electrostatic field is accompanied by consumption of energy which appears as a heating effect in the dielectric.

• 2-4 THE ELECTRIC CURRENT

Conduction — If a difference of potential exists across the ends of a conductor (by connecting the conductor — usually a wire — to a battery or generator or other source of voltage) there will be a continuous drift of electrons from atom to atom, and an electrical *current* is said to be flowing. The individual electrons do not streak from one end of the conductor to the other but the action is rather like a "bucket brigade" where, instead of firemen handing buckets down the line, atoms pass electrons down the line of the conductor. The current, or total effect of the electron drift, travels quite fast, close to the speed of light, but the electrons themselves move only a short distance.

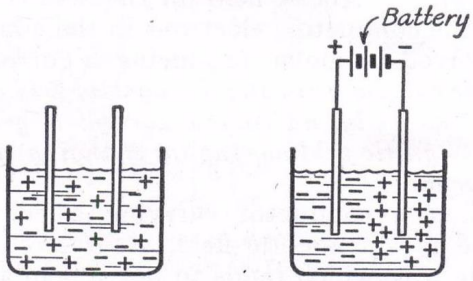

Fig. 204 — Electrolytic conduction. When an e.m.f. is applied to the electrodes, negative ions are attracted to the positively charged plate and positive ions to the negatively charged plate. The battery is indicated by its customary symbol.

The current is measured in *amperes*, and a current of one ampere represents nearly 10^{19} (ten million, million, million) electrons flowing past a point in one second. On more familiar ground, the current which flows through an ordinary 60-watt lamp is approximately one-half ampere.

Gaseous conduction (ionization) — All conduction does not necessarily take place in solid conductors. If a glass tube is fitted with metal plates at each end, and filled with a gas or even ordinary air (which is a mixture of gases) at reduced pressure, an electric current may be passed *through the gas* if a high enough voltage is applied across the metal terminals. When the voltage is applied across the tube, the positively charged plate attracts a few electrons, which acquire considerable velocity because of the electric charge and the fact that the reduced pressure in the tube (less gas) permits the electrons to travel farther before colliding with a gas atom. When one does collide with an atom, it knocks off an outer electron of the gas atom and this electron also joins the procession towards the positive plate, knocking off more electrons from other atoms as it goes. The atoms that have had an electron or two knocked off are no longer true atoms but *ions*, and since they have a positive charge (due to the electron deficiency) they are called "positive ions." These positive ions, being heavier than the electrons, travel more slowly towards the negative plate, where they acquire electrons and become neutral atoms again. The net result is a flow of electrons, and hence of current, from negative plate (called the *cathode*) to positive plate (*anode*).

Current flow in liquids — A very large number of chemical compounds have the peculiar characteristic that when they are put into solution the component parts become ionized. For example, common table salt or sodium chloride, each molecule of which is made up of one atom of sodium and one of chlorine, will, when put into water, break down into a sodium ion (positive, with one electron deficient) and a chlorine ion (negative, with one excess electron). This can only occur so long as the salt is in solution — take away the water and the ions are recombined into the neutral sodium chloride. This spontaneous *disassociation* in solution is another form of ionization, and if two wires with a difference of potential across them are placed in the solution, the negative wire will attract the positive sodium ions and the positive wire will attract the negative chlorine ions, and a current will

flow through the solution. When the ions reach the wires the electron surplus or deficiency will be remedied, and a neutral atom will be formed. The energy supplied by the source of potential difference is used to move the ions through the liquid and to supply or remove electrons. This type of current flow is called *electrolytic conduction.*

Batteries — All batteries depend upon chemical action for the generation of a potential difference across their terminals. The common *dry cell* (which will not work when *completely* dry) depends upon zinc ions (the metal case of a dry cell is the zinc plate) with a positive charge going into solution and leaving the zinc plate strongly negative. The electrical energy is derived from the chemical energy, and in time the zinc will be used up or worn away. However, in lead *storage batteries*, such as are used in automobiles for starting, the electrical energy is stored by chemical means and entails no destruction of the battery materials. The water that must be replaced from time to time is lost by evaporation.

It might be pointed out here that the term "battery" is used correctly only when speaking of more than one cell — a single cell is not a battery, but two or more connected together become a battery.

Current flow in vacuum — If a suitable metallic conductor, such as tungsten or oxide-coated or thoriated tungsten, is heated to a high temperature in a vacuum, electrons will be emitted from the surface. The electrons are

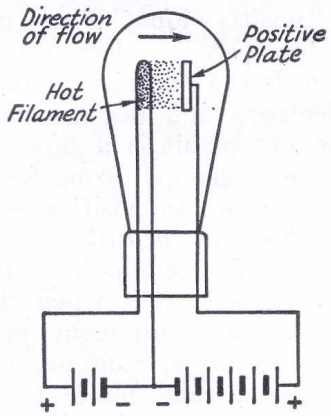

Fig. 205 — Illustrating conduction by thermionic emission of electrons in a vacuum tube. One battery is used *only* to heat the filament to a temperature where it will emit electrons. The other battery places a positive potential on the plate, with respect to the filament, and the electrons are attracted to the plate. The flow of electrons completes the electrical path, and current flows in the plate circuit.

freed from this *filament* or *cathode* because it has been heated to a temperature that activates them sufficiently to allow them to break away from the surface. The process is called *thermionic electron emission.* Now if a metal plate is placed in the vacuum tube and given a positive charge by connecting a battery between plate and cathode, this plate or *anode* will attract a number of the electrons that surround the cathode. The passage of the electrons from cathode to anode constitutes an electric current. All thermionic vacuum tubes depend for their operation on the emission of electrons from a hot cathode.

Direction of current flow — Use was being made of electricity for a long time before its electronic nature was understood, and while it is now clear that current flow is a drift of negative electrical charges or electrons toward a positive potential, in the era preceding the electron theory it was *assumed* that the current flowed from the point of higher positive potential to a point of lower (i.e., less positive or more negative) potential. While this assumption turned out to be wholly wrong, it is still customary to speak of current as flowing "from positive to negative" in many applications. The practice often causes confusion, but this distinction between "current" flow and "electron" flow often must be taken into account. If electron flow is specifically mentioned there is of course no doubt as to the meaning, but when the direction of *current* flow is specified it may be taken, by convention, as being opposite to the true direction.

• 2-5 ELECTROMAGNETISM

The magnetic field — The power that a bar or horseshoe magnet possesses of attracting small pieces of iron to itself is known to everyone. As in the case of electrostatic attraction (§ 2–3) the concept of a field of magnetic force is adopted to explain the magnetic action. The field is made up of *lines of magnetic force*, the number of which per unit area determine the strength of the field.

A moving electron generates a magnetic field of exactly the same nature as that existing about a permanent magnet. Since a moving electron, or group of electrons moving together, constitutes an electric current, it follows that the flow of current is accompanied by the creation of a magnetic field.

Conversely, when a conductor is moved through a magnetic field (or the field is moved past the conductor) electrons in the conductor are forced to move, producing a current. *An electric current generates a magnetic field about it and, conversely, an electric current is generated by a magnetic field moving (or changing) past the conductor.*

When a conductor carrying a current is placed in a magnetic field, a force is exerted on the wire which tends to move it in a direction determined by the relative directions of the flux lines of the external field and that set up by the current flow in the wire. This is a corollary of the fact that a current is induced

in a wire moving in a magnetic field, and is the principle used in the electric motor.

Magnetomotive force — When the conductor is a wire, the lines of force are in the form of concentric circles around the conductor and lie in planes at right angles to the axis of the conductor. The magnetic field constituted by these lines of force exists only when current is flowing through the wire. When the current

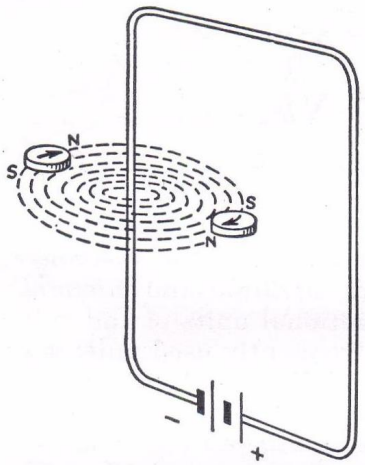

Fig. 206 — Whenever current passes through a wire, a magnetic field exists around the wire. Its direction can be traced by means of a small compass.

is started through the wire, we may visualize the magnetic field as coming into being and sweeping outward from the axis of the wire. On cessation of current flow, the field collapses toward the wire and disappears. *Thus energy is alternately stored in the field and returned to the wire.* When a conductor is wound into the form of a coil of many turns, the magnetic field becomes stronger because there are more lines of force. The force is expressed in terms of *magneto-motive force* (*m.m.f.*) which depends on the number of turns of wire, the size of the coil and the amount of current flowing through it. The same magnetizing effect can be secured with a great many turns and a weak current or with few turns and a strong current. If 10 amperes flow in one turn of wire, the magnetizing effect is 10 *ampere-turns.* Should one ampere flow in 10 turns of wire, the magnetizing effect is also 10 ampere-turns.

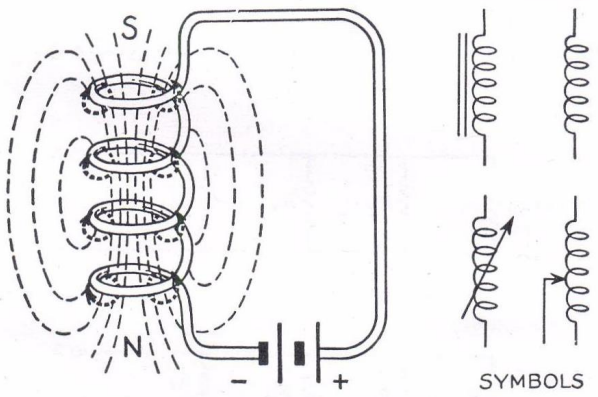

Fig. 207 — When the conducting wire is coiled, the individual magnetic fields of each turn are in such a direction as to produce a field similar to that of a bar magnet. The schematic symbols for inductance are shown at the right. The symbols at the left in the top row indicates an iron-core inductance; at right, air core. Variable inductances are shown in the bottom row.

Inductance — When a source of voltage is connected across a coil, the current does not immediately reach its final fixed value. The reason for this is that, as the current starts to flow through the coil, the magnetic field around the coil builds up, and as the field changes it induces a voltage back in the coil. The current caused by this induced voltage is always in the opposite direction to the current originally passed through the coil. Therefore, because of this property of *self-induction*, the coil tends constantly to oppose any change in the current flowing through it, and it takes an appreciable amount of time for the current to reach its normal value through the coil. The effect can be visualized as electrical inertia. After the current has come to a steady value, the self-inductance has no effect, and the current is only limited by the resistance of the wire in the coil.

The inductance of a coil is measured in *henrys* or, when smaller units are more convenient, the *millihenry* (one thousandth of a henry) or *microhenry* (one-millionth of a henry). The inductance of a coil depends on several factors, chief of which are the number of turns, the cross-sectional area of the coil, and the material in the center of the coil, or core. A core of magnetic material will greatly increase the inductance of a coil, just as certain dielectrics greatly increase the capacity of a condenser (§ 2–3). Even a straight wire has inductance, although small compared to that of a coil.

The inductance of a straight wire of given length is less as the diameter of the wire is increased. In general, a conductor of large cross-sectional area, or large surface, will have less inductance than one of small area but having the same length.

Magnetic circuits and units — Unlike electrostatic lines of force, magnetic lines of force must always be *closed*, forming circles or loops, so that the complete magnetic path of the lines of force must be considered in computing the effect of a magnetic core material on the inductance of a coil. The measure of the number of magnetic lines of force set up in a closed magnetic path or circuit through a given material for a specified applied m.m.f. is called the *magnetic permeability* of the material. It is expressed as a ratio to the number of lines set up by the same coil with the same applied m.m.f. with air as the core material, air therefore being assigned a permeability of unity. If the magnetic circuit is partly through a magnetic material and partly through a non-magnetic material (as in the case of a coil wound on a straight bar of iron, where part of the magnetic

path must be through air) the permeabilities of both mediums must be taken into account.

Permeability corresponds to conductivity in conductors, and its reciprocal, *reluctance*, corresponds to resistance. *Magnetic flux density*, or lines of force per unit area, is in the magnetic circuit equivalent to current in the electrical circuit, while the magnetomotive force is analogous to electromotive force or voltage.

• 2-6 FUNDAMENTAL RELATIONS

Ohm's law — The current in a conductor is determined by two things, the voltage across the conductor and the resistance of the conductor. The unit of resistance is the *ohm*, and, by definition, an e.m.f. of one volt will cause a current of one ampere to flow through a resistance of one ohm. Since the three quantities are interdependent, if we know the values of any two we can easily determine the third by the simple relation known as Ohm's Law. When I is the current in amperes, E is the electromotive force in volts and R is the circuit resistance in ohms, the formulas of Ohm's Law are:

$$R = \frac{E}{I} \qquad I = \frac{E}{R} \qquad E = IR$$

The *resistance* of the circuit can therefore be found *by dividing the voltage by the current:* the *current* can be found *by dividing the voltage by the resistance:* the *electromotive force or e.m.f.* is equal to the *product of the resistance and the current.*

The resistance of any metallic conductor depends upon the material and its temperature, its cross-sectional area and the length of the conductor. When resistance is deliberately added to a circuit, as is often done to adjust voltages or limit current flow, the resistance is usually lumped in a single unit and the unit is called a *resistor.*

Heating effect and power — When current passes through a conductor there is some molecular friction, and this friction generates heat. The heat generated is dependent only upon the current in the conductor, the resistance of the conductor and the time during which the current flows. The power used in heating (which may be considered sometimes as an undesired power loss) can be determined by substitution in the following equations:

$$P = EI,$$
$$\text{or } P = I^2R,$$
$$\text{or } P = \frac{E^2}{R}$$

P being the power in watts, E the e.m.f. in volts, and I the current in amperes.

It will be noted that if the current in a resistor and the resistance value are known, we can readily find the power. Or if the voltage across a resistance and the current through it are known, the product of volts and amperes will give the power. Knowing the value of a resistor (ohms) and the applied voltage across it, the power dissipated is given by the last formula.

Likewise, when the power and resistance in a circuit are known, the voltage and current can be calculated by the following equations derived from the power formulas given above:

$$E = \sqrt{PR}$$
$$I = \sqrt{\frac{P}{R}}$$

Units — Besides the fundamental units — volt, ampere, watt — fractional and multiple units frequently are convenient. Thus a *milliampere* is 1/1000 ampere and a *microampere* is 1/1,000,000 ampere. *Millivolt* and *microvolt* are corresponding fractional units of the volt. The *kilovolt* also is a frequently used unit; it is equal to 1000 volts. Resistance is frequently expressed in *megohms* (1 megohm = 1,000,000 ohms) and sometimes in *kilohms* (1000 ohms). Other units for power are the *microwatt*, *milliwatt*, and *kilowatt*, having equivalent meanings to those above. The *watt-hour* and *kilowatt-hour* are energy units, representing the total energy consumed when it is delivered at a given power rate for a given period of time; the numerical values are equal to the product of power and time in the units named.

Unless otherwise specified, formulas are always given in terms of the fundamental units, so that fractional or multiple units must first be converted to the fundamental units before an equation can be used.

Resistances in series and parallel — Resistors may be connected in series, in parallel or in series-parallel, as shown in Fig. 208. When two or more resistors are connected in series, the total resistance of the group is

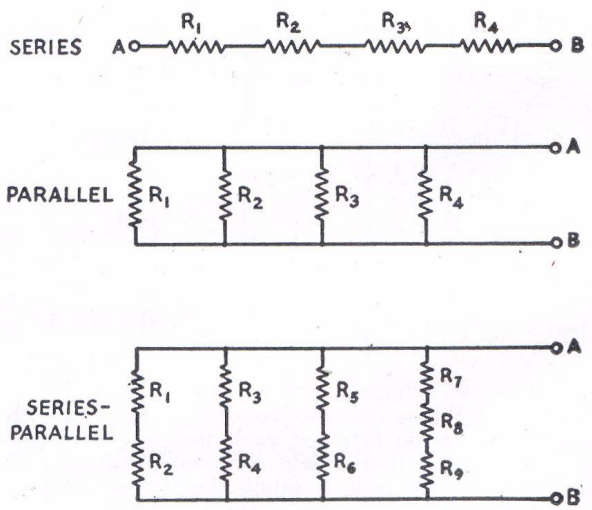

Fig. 208 — Diagrams of series, parallel and series-parallel resistance connections.

higher than that of any of the units. Should two or more resistors be connected in parallel, the total resistance is decreased. Fig. 208 and the following formulas show how the value of a bank of resistors in series, parallel or series-parallel may be computed, the total resistance being that which appears between A and B in each case.

Resistances in series:

$$\textit{Total resistance} = R_1 + R_2 + R_3 + R_4$$

Resistances in parallel:

$$\textit{Total resistance} = \frac{1}{\frac{1}{R_1}+\frac{1}{R_2}+\frac{1}{R_3}+\frac{1}{R_4}}$$

Or, in the case of only two resistances in parallel,

$$\textit{Total resistance} = \frac{R_1 R_2}{R_1 + R_2}$$

Resistances in series-parallel:

$$\textit{Total resistance} = \frac{1}{\frac{1}{R_1+R_2}+\frac{1}{R_3+R_4}+\frac{1}{R_5+R_6}+\frac{1}{R_7+R_8+R_9}}$$

This means that in series-parallel circuits the various groups of series resistors should first be added, then each group treated as a single resistor, so that the formula for resistances in parallel can be used.

Voltage dividers and potentiometers — Since the same current flows through resistors connected in series, it follows from Ohm's Law that the voltage (termed *voltage drop*) across each resistor of a series-connected group is proportional to its resistance. Thus in Fig. 209-A the voltage E_1 across R_1 is equal to the applied voltage E multiplied by the ratio of R_1 to the total resistance, or

$$E_1 = \frac{R_1}{R_1 + R_2 + R_3} \cdot E$$

Similarly, the voltage E_2 is equal to

$$\frac{R_1 + R_2}{R_1 + R_2 + R_3} \cdot E$$

Such an arrangement is called a *voltage divider*. When current is drawn from the divider at the various tap points the above relations are no longer strictly true, since the same current does not flow in all parts of the divider. Design data for such cases are given in § 8-10.

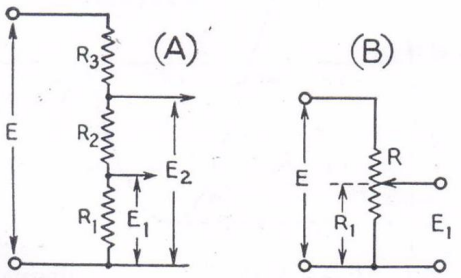

Fig. 209 — The voltage divider or potentiometer.

A similar arrangement is shown in Fig. 209-B, where the total resistance R is equipped with a sliding tap for fine adjustment. Such a resistor is frequently called a *potentiometer*, although the word is not used in its original sense.

Inductances in series and parallel — The formulas for the total inductance of a group of separate inductances connected in series, parallel, or series parallel are exactly the same as those given in the previous paragraph for resistances, provided only that the magnetic fields about the coils are not permitted to interact with each other.

Condensers in series and parallel — The total capacity of a group of condensers connected in series, parallel or series parallel can be computed by formulas similar to those used for resistances and inductances, but with the series and parallel formulas interchanged. Thus, for condensers in parallel,

$$\text{Total capacity} = C_1 + C_2 + C_3 + C_4, \text{ etc.}$$

For condensers in series,

$$\text{Total capacity} = \frac{1}{\frac{1}{C_1}+\frac{1}{C_2}+\frac{1}{C_3}+\frac{1}{C_4}}$$

or for two condensers in series

$$\text{Total capacity} = \frac{C_1 C_2}{C_1 + C_2}$$

With condensers in series parallel, first compute the resultant capacity of the condensers in series in each parallel branch, then add the capacities so found for the various branches.

Time constant — When a condenser and resistor are connected in series with a source of e.m.f. such as a battery the initial flow of current into the condenser is limited by the resistance, so that a longer period of time is required to complete the charging of the condenser than would be the case without the resistor. Likewise, when the condenser is discharged through a resistance, a measurable period of time is taken for the current flow to reach a negligible value. In the case of either charge or discharge the time required is proportional to the capacity and resistance, the product of which is called the *time constant* of the circuit. If C is in farads and R in ohms, or C in microfarads and R in megohms, this product gives the time in seconds required for the voltage across a discharging condenser to drop to $1/e$ or approximately 37% of its original value. (The constant e is the base of the natural series of logarithms.)

A circuit containing inductance and re-

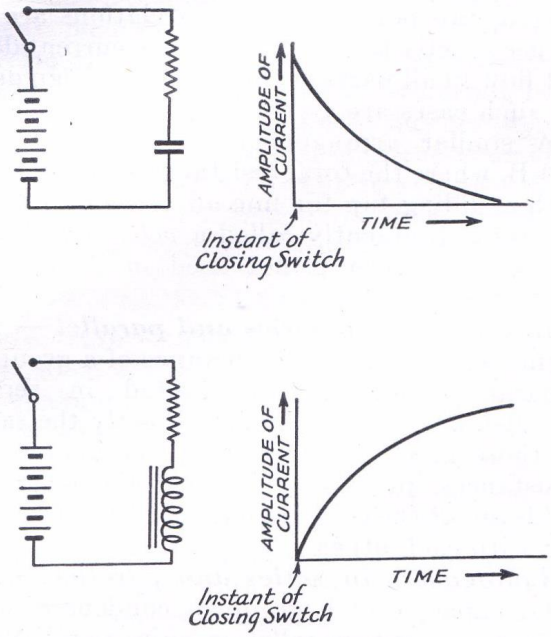

Fig. 210 — Showing how the current in a circuit combining resistance with inductance or capacity takes a finite period of time to reach its steady-state value.

sistance also has a time constant, for similar reasons. The time constant of an inductive circuit is equal to L/R, and when L is in henrys and R in ohms gives the time in seconds required for the current to reach $1-1/e$ or approximately 63% of its final steady value when a constant voltage is applied to the circuit.

Measuring instruments — Instruments for measuring d.c. current and voltage make use of the force acting on a coil carrying current in a magnetic field (§ 2-5), produced by a permanent magnet, to move a pointer along a calibrated scale. All such instruments are therefore current operated, the current required for full-scale deflection of the pointer varying from several milliamperes to a few microamperes according to the sensitivity required. If the instrument is to read high currents, it is *shunted* (paralleled) by a low resistance through which most of the current flows, leaving only enough flowing through the instrument to give a full scale deflection corresponding to the total current flowing through both meter and shunt. An instrument which reads microamperes is called a *microammeter* or *galvanometer;* one calibrated in milliamperes is called a *milliammeter;* one calibrated in amperes is an *ammeter*. A *voltmeter* is simply a milliammeter with a high resistance in series so that the current will be limited to a suitable value when the instrument is connected across a voltage source; it is calibrated in terms of the voltage which must appear across the terminals to cause a given value of current to flow. The series resistance is called a *multiplier*. A *wattmeter* is a combination voltmeter and ammeter in which the pointer deflection is proportional to the power in the circuit.

An ammeter or milliammeter is connected in series with the circuit in which current is being measured, so that the current flows through the instrument. A voltmeter is connected in parallel with the circuit.

• 2-7 ALTERNATING CURRENT

Description — In self-induction the induced voltage always opposes the voltage causing the original current flow (§ 2–5). Similarly, if a closed wire is placed in an expanding magnetic field, the current induced in the wire by the changing field will flow in such a direction that the magnetic field set up in turn by this induced current opposes the field which originally caused it. Now if the original field is caused to collapse (moving toward the wire instead of outward from it) the induced current will change its direction so that its field again will be in opposition to the original field. If the primary field regularly builds up and collapses the current will change direction correspondingly; in other words, it is an *alternating current*. Since current is only caused to flow by a *changing* magnetic field, it is easy to see why alternating currents are widely used; they are a natural result of the application of the principle of induction.

The simplest form of alternating current (or voltage) is shown graphically in Fig. 211. This chart shows that the current starts at zero value, builds up to a maximum in one direction, comes back down to zero, builds up to a maximum in the opposite direction and comes back to zero. The curve followed is described mathematically as a *sine curve;* its wavelike nature causes it to be known as a *sine wave*.

Frequency — The complete wave shown in Fig. 211 is called a *cycle*, or *period*. Each half of the cycle, during which the current is flowing in one direction, although its strength is varying, is known as an *alternation*. The number of cycles the wave goes through each second of time is called the *frequency* of the current. Frequencies vary from a few cycles per second for power line alternating currents to many

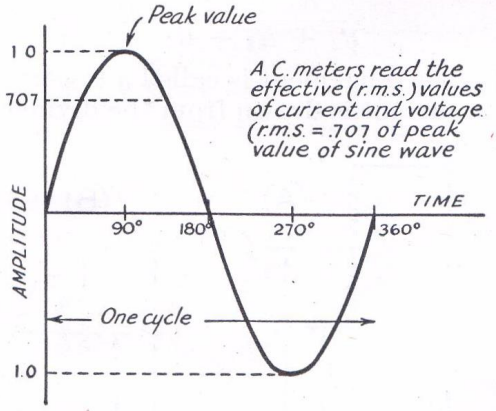

Fig. 211 — Representing sine-wave alternating current or voltage.

millions per second in radio circuits. For convenience, two other units, the *kilocycle* (1000 cycles) and the *megacycle* (1,000,000 cycles) also are used. The abbreviations for these are kc. and Mc., respectively.

Electrical degrees — If we take a fixed point on the periphery of a revolving wheel, we find that at the end of each revolution, or cycle, the point has come back to its original starting place. Its position at any instant can be expressed in terms of the angle between two lines, one drawn from the center of the wheel to the point at the instant of time considered, the other drawn from the wheel center to the starting point. In making one complete revolution the point has travelled through 360 degrees, a half revolution 180 degrees, a quarter revolution 90 degrees, and so on. The periodic wave of alternating current may be treated similarly, one complete cycle equalling one revolution or 360 degrees, one alternation (half cycle) 180 degrees, and so on. With the cycle divided up in this way, the sine curve simply means that the value of current at any instant is proportional to the sine of the angle which corresponds to the particular fraction of the cycle considered.

The concept of angle is universally used in alternating currents. Generally, it is expressed in the fundamental form, using the radian rather than the degree as a unit, whence a cycle is equal to 2π radians, or a half cycle to π radians. The expression $2\pi f$, for which the symbol ω is often used, simply means electrical degrees per cycle times frequency, and is called the *angular velocity*. It gives the total number of electrical radians passed through by a current of given frequency in one second.

Waveform, harmonics — The sine wave is not only the simplest but in many respects the most desirable waveform. Many other waveforms are met with in practice, however, and they may differ considerably from the simple sine case. It is possible to show by analysis that any such waveform can be resolved into a number of components of differing frequencies and amplitudes, but related in frequency in such a way that all are integer multiples of the lowest frequency present. The lowest frequency is called the *fundamental*, and the multiple frequencies are called *harmonics*. Thus a wave may consist of fundamental, 3rd, 5th, and 7th harmonics, meaning, if the fundamental frequency is say 100 cycles, that frequencies of 300, 500 and 700 cycles also are present in the wave.

Effective, peak and average values — It is evident that both the voltage and current are swinging continuously between their positive maximum and negative maximum values, and it might be wondered how one can speak of so many amperes of alternating current when the value is changing continuously. The problem is simplified in practical work by considering that *an alternating current has an effective value of one ampere when it produces heat at the same average rate as one ampere of continuous direct current flowing through a given resistor*. This effective value is the square root of the mean of all the instantaneous current values squared. For the sine-wave form,

$$E_{\text{eff}} = \sqrt{\tfrac{1}{2}E^2_{\text{max}}}$$

For this reason, the effective value of an alternating current, or voltage, is also known as the *root-mean-square* or *r.m.s.* value. Hence, the effective value is the square root of ½ or 0.707 of the maximum value — practically considered 70% of the maximum value.

Another important value, involved where alternating current is rectified to direct current, is the *average*. This is simply the average of all instantaneous values in the wave, and for a sine wave is equal to 0.636 of the maximum (or peak) value of either current or voltage. The three terms *maximum* (or *peak*), *effective* (or *r.m.s.*) and *average* are encountered frequently in radio work. For the sine form they are related to each other as follows:

$$E_{\text{max}} = E_{\text{eff}} \times 1.414 = E_{\text{ave}} \times 1.57$$
$$E_{\text{eff}} = E_{\text{max}} \times 0.707 = E_{\text{ave}} \times 1.11$$
$$E_{\text{ave}} = E_{\text{max}} \times 0.636 = E_{\text{eff}} \times 0.9$$

The relationships for current are the same as those given above for voltage.

Phase — It has been mentioned that in a circuit containing inductance, the rise of current is delayed by the effect of electrical inertia presented by the inductance (§ 2–5). Both increases and decreases of current are similarly

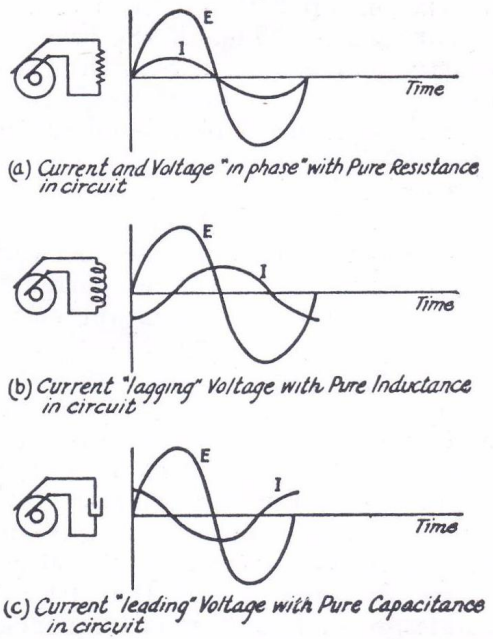

Fig. 212 — Phase relationships between voltage and current in resistive and reactive circuits. The symbol at the left represents a generator.

delayed. It is also true that a current must flow into a condenser before its elements can be charged and so provide a voltage difference between its terminals. Because of these facts, we say that a current "lags" behind the voltage in a circuit which has a preponderance of inductance and that the current "leads" the voltage in a circuit where capacity predominates. Fig. 212 shows three possible conditions in an alternating current circuit. In the first, when the load is a pure resistance, both voltage and current rise to the maximum values simultaneously. In this case the voltage and current are said to be *in phase*. In the second instance, the existence of inductance in the circuit has caused the current to lag behind the voltage. In the diagram, the current is lagging one quarter cycle behind the voltage. The current is therefore said to be 90 degrees *out of phase* with the voltage. In the third example, with a capacitive load, the voltage is lagging one quarter cycle behind the current. The *phase difference* is again 90 degrees. These, of course, are theoretical examples in which it is assumed that the inductance and the condenser have no resistance. Actually, the angle of lag or lead (*phase angle*) depends on the amounts of inductance, capacity and resistance in the circuit.

The phase relationships between two currents (or two voltages) of the same frequency are defined in the same way. When two such currents are combined the resultant is a single current of the same frequency, but having an instantaneous amplitude equal to the algebraic sum of the amplitudes of the two components at the same instant. The amplitude of the resultant current hence is determined by the phase relationship between the two currents before combination. Thus if the two currents are exactly in phase, the maximum value of the resultant will be the numerical sum of the maximum values of the individual currents; if they are 180 degrees out of phase, one reaches its positive maximum at the instant the other reaches its negative maximum, hence the resultant current is the difference between the two. In the latter case, if the two currents have the same amplitude the resultant current is zero.

The a.c. spectrum — Alternating currents of different frequencies have different properties and are useful in many varieties of ways. For the transmission of power to light lamps, run motors, and perform familiar everyday tasks by electrical means, low frequencies are most suitable. Frequencies of 25, 50 and 60 cycles are in common use, the latter being most widespread. The range of frequencies between about 30 and 15,000 cycles is known as the *audio-frequency* range, because when frequencies of this order are converted from a.c. into air vibrations, as by a loudspeaker or telephone receiver, they are distinguishable as sounds, having a tone pitch proportional to the frequency. Frequencies between 15,000 cycles (15 kilocycles) and about 1,000,000,000 cycles (1000 megacycles) are used for radio communication, because with frequencies of this order it is possible to convert electrical energy into radio waves. The latter frequency is about the highest it is possible to generate at present, but does not necessarily represent the highest frequency that could be used for radio work.

The a.c. spectrum is divided into the following approximate classifications for convenience in reference:

15–15,000 cycles	Audio frequencies
15–100 kilocycles	Low radio frequencies
100–1500 kilocycles	Medium radio frequencies
1.5–6 megacycles	Medium high frequencies
6–30 megacycles	High frequencies
Above 30 megacycles	Ultra-high frequencies

• 2-8 OHM'S LAW FOR ALTERNATING CURRENTS

Resistance — Since current and voltage are always in phase through a resistance, the instantaneous relations are equivalent to those in direct-current circuits, and since by definition the units of current and voltage for a.c. are made equal to those for d.c. in resistive circuits, the various formulas expressing Ohm's Law for d.c. circuits apply without any change for a.c. circuits containing resistance only, or for purely resistive parts of complex a.c. circuits. The formulas are given in § 2-6.

Reactance — In an a.c. circuit containing inductance or capacity, the current and voltage are not in phase (§ 2-7) so that Ohm's Law cannot be applied directly. The current is not limited by resistance, as in d.c. circuits, but by a quantity called *reactance*, which expresses the opposing effect of the voltage of self-induction (§ 2-5), in the case of an inductance, and the accumulation of charge in the case of a condenser. In circuits containing only reactance no energy is consumed, since the energy put into an inductance or capacity in one part of the cycle is stored in the electromagnetic or electrostatic field and is returned to the circuit in another part of the cycle. Thus in a purely reactive circuit it is possible to have both high voltage and high current without the consumption of any power. Of course in practice there is always some resistance in the wire of an inductance, or heating of the dielectric of a condenser, so that some energy may be lost, but it is usually negligible in well-designed components.

Reactance is expressed in ohms, the same unit as for resistance, since with a given reactance at a given frequency the current that

will flow is proportional to the applied voltage. Hence,

$$X = \frac{E}{I}$$

for a purely reactive circuit. X is the symbol for reactance.

In circuits containing both resistance and reactance the values of each cannot be added directly because of the different phase relations.

Inductive reactance — The greater the inductance of a coil, the greater is the effect of self-induction (§ 2-5), or the opposition to a change in the value of current, hence the higher the reactance. Also, the higher the frequency the greater the reactance, since the greater the rate of change of current the more opposition the coil offers to the change. Hence, inductive reactance is proportional to inductance and frequency, or

$$X_L = 2\pi fL$$

It will be recognized here that angular velocity, $2\pi f$ (§ 2-7), expresses the rapidity with which the current changes.

The fundamental units (ohms, cycles, henrys) must be used in the above equation, or appropriate factors inserted in case other units are employed. If inductance is in millihenrys, frequency should be in kilocycles; if inductance is in microhenrys, frequency should be in megacycles, to bring the answer in ohms.

Capacitive reactance — When a condenser is used in an a.c. circuit it is rapidly charged and discharged as the a.c. voltage rises and falls and reverses in polarity. This repetition of charge and discharge constitutes the flow of alternating current through the condenser. Since for a given voltage the energy stored in the condenser is fixed by its capacity (§ 2-3) it is obvious that the total amount of energy stored in the condenser (and subsequently restored to the circuit) in one second will be greater when the condenser is charged many times per second than when it is charged only a few times. Hence the current flow will be proportional to the frequency and to the capacity of the condenser, or conversely the reactance will be inversely proportional to the frequency and the capacity. Therefore

$$X_C = \frac{1}{2\pi fC}$$

where $2\pi f$ again is the angular velocity or the rapidity with which the current changes. When f is in cycles per second and C in farads, X_C will be in ohms. If C is in microfarads, f must be expressed in megacycles to bring the resistance in ohms.

Impedance — In circuits containing inductive reactance the current lags the voltage while with capacity reactance the current leads (§ 2-7). Hence the effects of inductive and capacitive reactance are opposite in sense, or, as it is commonly expressed, inductive and capacitive reactances cancel each other. In series circuits having both inductive and capacitive reactance the net reactance is the difference between the two, and the current will either lead or lag depending upon which is larger, capacitive or inductive reactance. Inductive reactance is considered positive and capacitive reactance negative, so that

$$X = X_L - X_C$$

The combined effect of resistance and reactance is termed *impedance*. The symbol for impedance is Z and, for a series circuit, it is computed from the formula:

$$Z = \sqrt{R^2 + X^2}$$

where R is the resistance and X is the reactance. The terms Z, R and X are all expressed in ohms. Ohm's Law for alternating current circuits then becomes

$$I = \frac{E}{Z}; \quad Z = \frac{E}{I}; \quad E = IZ$$

The phase angle depends upon the relative amounts of resistance and reactance, becoming more nearly zero (current and voltage in phase) when reactance is small compared to resistance, and more nearly 90 degrees when resistance is small compared to reactance.

Power factor — The power dissipated in an a.c. circuit containing both resistance and reactance is consumed entirely in the resistance, hence is equal to I^2R. However, the reactance is also effective in determining the current or voltage in the circuit, even though it consumes no energy. Hence the product of volts times amperes (which gives the power consumed in d.c. circuits) for the whole circuit may be several times the actual power used up. The ratio of power dissipated (watts) to the *volt-ampere* product is called the power factor of the circuit, or

$$\text{Power factor} = \frac{\text{Watts}}{\text{Volt-amperes}}$$

Distributed capacity and inductance — It should not be thought that the reactance of coils becomes infinitely high as the frequency is increased to a high value and, likewise, that the reactance of condensers becomes infinitely low at high frequencies. All coils have some capacity between turns, and the reactance of this capacity can become low enough at some high frequencies to tend to cancel the high reactance of the coil. Likewise, the leads and plates of condensers will have considerable inductance at very high frequencies, which will tend to offset the capacitive reactance of the condenser itself. For these reasons, coils for high-frequency work must be designed to have

low "distributed" capacity, and condensers must be made with short, heavy leads to have low inductance.

Units and instruments — The units used in a.c. circuits may be divided or multiplied to give convenient numerical values to different orders of magnitude, just as in d.c. circuits (§ 2-6). Because the rapidly reversing current is accompanied by similar reversals in magnetic field, instruments used for measurement of d.c. (§ 2-6) will not operate on a.c. At low frequencies suitable instruments can be constructed by making the current produce both magnetic fields, one by means of a fixed coil and the other by the moving coil. Such instruments are used for measurement of either current or voltage. At radio frequencies this type of instrument is inaccurate because of distributed capacity and other effects, and the only reliable type of direct-reading instrument is the *thermocouple ammeter* or milliammeter. This is a power-operated device consisting of a resistance wire, heated by the flow of r.f. current through it, to which is attached a thermocouple, or pair of wires of dissimilar metals joined together and possessing the property of developing a small d.c. voltage between the terminals when heated. This voltage, which is proportional to the heat applied to the couple, is used to operate a d.c. instrument of ordinary design.

• 2-9 THE TRANSFORMER

Principles — If two coils of wire are wound on a laminated iron core and one of the coils is connected to a source of alternating current, it will be found that there is an alternating voltage across the terminals of the other coil of wire, and an alternating current will flow through a conductor connecting the two terminals. The alternating current in the first coil, or *primary*, causes a changing magnetic field in the iron core, and this changing magnetic field induces an alternating current in the second coil, or *secondary*. This is simply an application of the principle of induction (§ 2-5) with the induced voltage being caused by a varying magnetic field set up by a current flowing in a separate winding instead of the same coil.

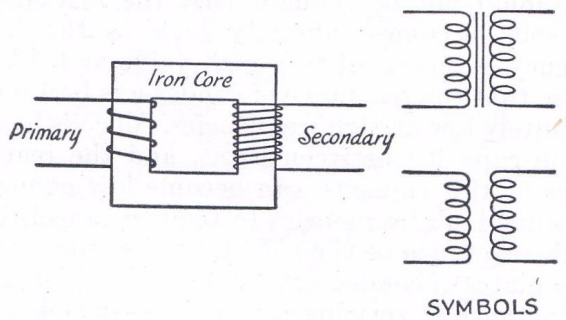

Fig. 213 — The transformer. Power is transferred from one coil to the other by means of the magnetic field. The upper symbol at the right indicates an iron-core transformer, the lower one an air-core transformer.

Voltage and turn ratio — For a given varying magnetic field, the voltage induced in a coil in the field will be proportional to the number of turns on the coil. Since the two coils of a transformer are in the same field, it follows that the induced voltages will be proportional to the number of turns on each coil. In the case of the primary, or coil connected to the source of power, the induced voltage is practically equal to, and opposes, the applied voltage. Hence, the secondary induced voltage is very nearly equal to the voltage applied to the primary, multiplied by the ratio of the number of turns on the secondary to the number of turns on the primary.

Voltage and current relations — A transformer cannot deliver more power to its secondary load than it takes from the primary source of power, since to do so would be to violate the principle of conservation of energy. Hence we find that transforming a given voltage to a new value causes an inverse transformation in the current delivered to the load as compared to that taken from the line. For example, a transformer with a secondary-to-primary voltage ratio of 5 will have a current ratio of ⅕, which means that the primary current will be five times the secondary current. A voltage ratio of less than unity gives a corresponding increase in secondary-to-primary current ratio. Actually these ratios are not exact, since the transformer will have some losses both in the wire and in the iron core, and this additional loss appears as power taken by the primary which is not available for the secondary load. The *efficiency*, or ratio of power delivered to the load to power taken from the line, of small transformers may vary between 60% and 90%, depending upon the design.

Impedance ratio — In a properly designed iron-core transformer practically all the magnetic lines of force cut both primary and secondary coils, hence the relationship between secondary current and primary current described in the preceding paragraph. The only reactance present is that due to "leakage," or magnetic flux lines which cut one coil but not the other. Since the leakage reactance is small, a transformer having a resistive load on its secondary will also "look like" a practically resistive load to the power line which supplies its primary. The impedance is equal to E/I (§ 2-8) and, neglecting losses, if n is the secondary-to-primary turn ratio, then

$$\frac{E_p}{I_p} = \frac{\frac{E_s}{n}}{nI_s} = \frac{E_s}{n^2 I_s} \text{ or } n^2 \frac{E_p}{I_p} = \frac{E_s}{I_s}$$

That is, the impedance (E_p/I_p) presented by

the primary to the line (called the *reflected impedance* or *reflected load*) is equal to the secondary load impedance (E_s/I_s) divided by the square of the secondary-to-primary turns ratio. The *impedance ratio*, or ratio of secondary load impedance to impedance presented by the primary to the line, is therefore equal to the square of the turn ratio. This relation is very frequently used in radio circuits.

Impedance matching — Many devices require a specific value of load resistance (or impedance) for optimum operation. The resistance of the actual load which is to dissipate the power may differ widely from this value, hence the transformer with its impedance-transforming properties is frequently called upon to change the actual load to the desired value. This is called *impedance matching*. From the preceding paragraph,

$$\frac{N_s}{N_p} = \sqrt{\frac{Z_s}{Z_p}}$$

where N_s/N_p is the required secondary-to-primary turn ratio, Z_s is the impedance of the actual load, and Z_p the impedance required for optimum operation of the device delivering the power.

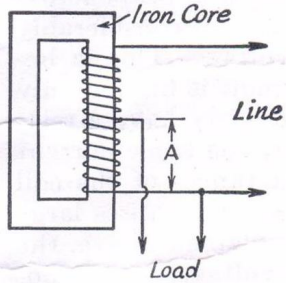

Fig. 214 — The autotransformer. Line and load currents in the common winding (A) flow in opposite directions so that the resultant current is the difference between them.

The autotransformer — The transformer principle can be utilized with only one winding instead of two, as shown in Fig. 214; the principles just discussed apply equally well. The *autotransformer* has the advantage that the line and load currents in the common section are out of phase, hence this portion of the winding carries less current than the remainder of the coil. This advantage is not very marked unless the primary and secondary voltages do not differ very greatly, while it is frequently disadvantageous to have a direct connection between primary and secondary circuits. For these reasons its application is usually limited to boosting or reducing the line voltage for voltage correction or similar purposes.

• 2-10 RESONANT CIRCUITS

Principle of resonance — It has been shown (§ 2-8) that the inductive reactance of a coil and the capacitive reactance of a condenser are oppositely affected by frequency. In any combination of inductance and capacitance, therefore, there is one particular frequency for which the inductive and capacitive reactances are equal and, since these two reactances cancel each other, the net reactance becomes zero, leaving only the resistance of the circuit to impede the flow of current. The frequency at which this occurs is known as the *resonant frequency* of the circuit and the circuit is said to be *in resonance* at that frequency or *tuned* to that frequency.

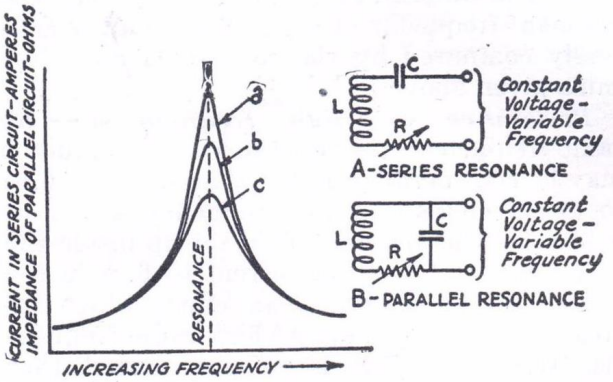

Fig. 215 — Characteristics of series-resonant and parallel-resonant circuits.

Series circuits — The resonant frequency of a simple circuit containing inductance and capacity in series is given by

$$f = \frac{1}{2\pi\sqrt{LC}} \times 10^6$$

where

f is the frequency in kilocycles per second
2π is 6.28
L is the inductance in microhenrys (μh.)
C is the capacitance in micro-microfarads ($\mu\mu$fd.)

The resistance that may be present does not enter into the formula for resonant frequency.

With a constant-voltage alternating current applied as shown in A of Fig. 215 the current flowing through such a circuit will be maximum at the resonant frequency. The magnitude of the current will be determined by the resistance in the circuit. The curves of Fig. 215 illustrate this, curve *a* being for low resistance and curves *b* and *c* being for greater resistances.

Parallel circuits — The parallel resonant circuit is illustrated in B of Fig. 215. This also contains inductance, capacitance and resistance in series, but the voltage is applied in parallel with the combination instead of in series with it as in A. Here we are primarily interested in the characteristics of the circuit as viewed from its terminals, especially in the *parallel impedance* it offers. The variation of parallel impedance of a parallel resonant circuit with frequency is illustrated by the same curves of Fig. 215 that show the variation in current with frequency for the series-resonant circuit. The parallel impedance is maximum at resonance and increases as the series resistance is made smaller.

In the case of parallel circuits, resonance may be defined in three ways: the condition which gives maximum impedance, that which gives maximum power factor, or (as in series circuits) when the inductive and capacitive reactances are equal. If the resistance is low, the resonant frequencies obtained on the three bases are practically identical. This condition usually is satisfied in radio work, so that the resonant frequency of a parallel circuit is generally computed by the series-resonance formula given above.

Resistance at high frequencies — At radio frequencies the resistance of a conductor may be considerably higher than its resistance to direct current or low-frequency a.c. This is because the magnetic field set up inside the wire tends to force the current to flow in the outer part of the wire, an effect which increases with frequency. At high radio frequencies this *skin effect* is so pronounced that practically all the current flows very near the surface of the conductor, thereby in effect reducing the cross-sectional area and hence increasing the resistance. For this reason low resistance can be achieved only by using conductors with large surface area, but since the inner part of the conductor does not carry current, thin tubing will serve just as well as solid wire of the same diameter.

A similar effect takes place in coils for radio frequencies, where the magnetic fields cause a concentration of current in certain parts of the conductors, again causing an effective decrease in the conductor size and raising the resistance. These effects, plus the effects of stray currents caused by distributed capacity (§ 2-8), raise the effective resistance of a coil to many times the d.c. resistance of the wire.

Sharpness of resonance — The resonance curves become "flatter" for frequencies near resonance frequency, as shown in Fig. 215, as the internal series resistance is increased, but are of the same shape for all resistances at frequencies farther removed from resonance frequency. The relative sharpness of the resonance curve near resonance frequency is a measure of the *sharpness of tuning or selectivity* (ability to discriminate between voltages of different frequencies) in such circuits. This is an important consideration in tuned circuits used for radio work.

Flywheel effect; Q — A resonant circuit may be compared to a flywheel in its behavior. Just as such a wheel will continue to revolve after it is no longer driven, so also will oscillations of electrical energy continue in a resonant circuit after the source of power is removed. The flywheel continues to revolve because of its stored mechanical energy; current flow continues in a resonant circuit by virtue of the energy stored in the magnetic and electric fields of the condenser and coil. The sharpness of resonance, which is directly related to the flywheel effect, is determined by the ratio of energy stored to energy dissipated, hence is proportional to the reactance in the circuit and inversely proportional to the resistance. This ratio of stored energy to dissipated energy is called the *Q* of the circuit.

In resonant circuits at frequencies below about 28 Mc. the resistance is practically wholly in the coil; condenser resistance may be neglected. Consequently the *Q* of the circuit as a whole is determined by the *Q* of the coil, or its ratio of reactance to resistance. Coils for frequencies below the ultra-high frequency region may have *Q's* ranging from 100 to several hundred, depending upon their size and construction.

Damping, decrement — The rate at which current dies down in amplitude in a resonant circuit after the source of power has been removed is called the *decrement* or *damping* of the circuit. A circuit with high decrement (low *Q*) is said to be highly damped; one with low decrement (high *Q*) is lightly damped.

Voltage rise — When a voltage of the resonant frequency is inserted in series in a resonant circuit, the voltage which appears across either the coil or condenser is considerably higher than the applied voltage. This is because the current in the circuit is limited only by the resistance and hence may have a relatively high value; however, the same current flows through the high reactances of the coil and condenser and consequently causes large voltage drops (§ 2-8). As explained above, the reactances, and hence the voltages, are opposite in phase so that the net voltage around the circuit is only that applied. The ratio of the reactive voltage to the applied voltage is proportional to the ratio of reactance to resistance, which is the *Q* of the circuit. Hence the voltage across either the coil or condenser is equal to *Q* times the voltage inserted in series with the circuit.

Parallel-resonant circuit impedance — The parallel-resonant circuit offers pure resistance (its *resonant impedance*) between its

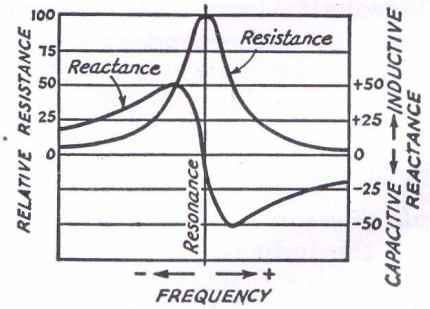

Fig. 216 — **The impedance of a parallel-resonant circuit separated into its reactance and resistance components. The parallel resistance is equal to the parallel impedance at resonance.**

terminals at resonance frequency, and becomes reactive for frequencies higher and lower. The manner in which this reactance varies with frequency is shown by the curve in Fig. 216. This figure also shows the *parallel resistance* component which combines with the reactance to make up the impedance.

The value of parallel impedance at resonance is proportional to the reactance of either the coil or condenser and inversely proportional to the series resistance. (This resistance should not be confused with the resistance component of parallel impedance which has just been mentioned.) Assuming that all the resistance is in the coil, then

$$Z_r = \frac{(2\pi f_r L)^2}{R}$$

$$\text{Since } \frac{2\pi f_r L}{R} = Q,$$

$$Z_r = (2\pi f_r L)Q$$

In other words, the resonant impedance is equal to the inductive reactance of the coil (at resonant frequency) times the Q of the circuit. Since at resonance the coil and condenser reactances are numerically equal, Z_r also equals the circuit Q times the condenser reactance, or

$$Z_r = XQ$$

Q of loaded circuits — In many applications, particularly in receiving, the only resistance present in the resonant circuit is that of the circuit itself. Hence the coil is designed to have as high Q as possible. Since, within limits, increasing the number of turns raises the reactance faster than it raises the resistance, coils for such purposes are made with relatively large inductance for the frequency under consideration.

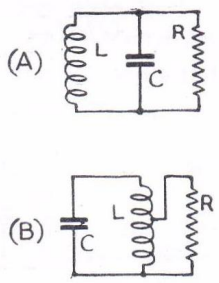

Fig. 217 — **The equivalent circuit of a resonant circuit delivering power to a load. The resistor R represents the load resistance. At B the load is shown tapped across part of L, which by transformer action is equivalent to using a higher value of load resistance across the whole circuit.**

When the circuit delivers energy to a load, as in the case of resonant circuits used in transmitters, the energy consumed in the circuit itself is usually negligible compared with that consumed by the load. The equivalent of such a circuit can be represented as shown in Fig. 217-A where the parallel resistor represents the load to which power is delivered. Since $Z = XQ$, the Q of a circuit loaded with a resistive impedance Z is (neglecting internal resistance)

$$Q = \frac{Z}{X}$$

Hence for a given parallel impedance, the effective Q of the circuit including the load is proportional to $1/X$, or inversely proportional to the reactance of either the coil or the condenser. A circuit loaded with a relatively low resistance (a few thousand ohms) must therefore have a large capacity and relatively small inductance to have reasonably high Q.

The effect of a load of given resistance on the Q of the circuit also can be changed by connecting the load across only part of the circuit. The most common method of accomplishing this is by tapping the load across part of the coil, as shown in Fig. 217-B. The smaller the portion of the coil across which the load is tapped the less the loading on the circuit; in other words, tapping the load "down" is equivalent to connecting a higher value of load resistance across the whole circuit. This is similar in principle to impedance transformation with an iron-core transformer (§ 2-9). However, in the high-frequency resonant circuit the impedance ratio does not vary exactly as the square of the turn ratio because all the magnetic flux lines do not cut every turn of the coil. A desired reflected impedance usually must be obtained by experimental adjustment.

L/C ratio — For a given frequency the product of L and C must always be the same, but it is evident that L can be large and C small, L small and C large, etc. The relation between the two for a fixed frequency is called the *L/C ratio*. A *high-C* circuit is one which has more capacity than "normal" for the frequency; a *low-C* circuit one which has less than normal capacity. These terms depend to a considerable extent upon the particular application considered, and have no exact numerical meaning.

Piezo-electricity — Properly-ground crystals of quartz and some other materials show a mechanical strain when subjected to an electric charge and, conversely, will show a difference in potential between two faces when subjected to mechanical stress. This characteristic is called the *piezo-electric* effect. A properly-ground quartz crystal is a mechanical vibrator electrically equivalent to a series-resonant circuit of very high Q, and can be used for many of the purposes for which ordinary resonant circuits are used.

• 2-11 COUPLED CIRCUITS

Energy transfer; loading — Two circuits are said to be *coupled* when energy can be transferred from one to the other. The circuit delivering energy is called the primary circuit;

that receiving energy is called the secondary circuit. The energy may be practically all dissipated in the secondary circuit itself, as in receiver circuits, or the secondary may simply act as a medium through which the energy is transferred to a load resistance where it does work. In the latter case the coupled circuits

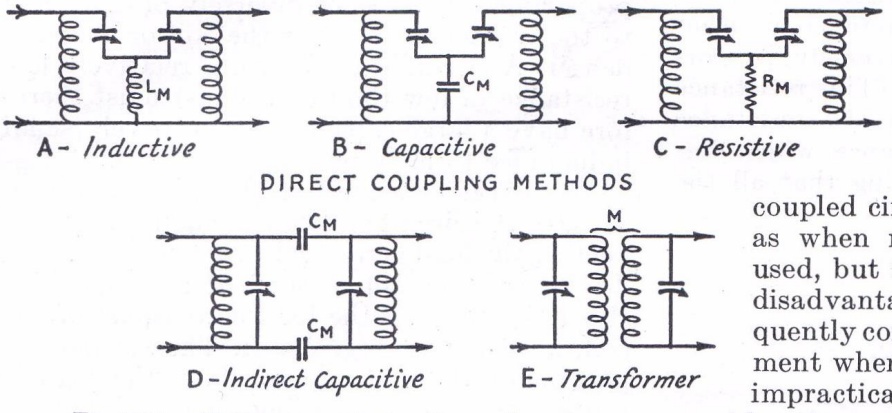

Fig. 218 — Basic types of circuit coupling.

may act as a radio-frequency impedance matching device (§ 2-9) where the matching may be accomplished by adjusting the loading on the secondary (§ 2-10) and by varying the coupling between the primary and secondary.

Coupling by a common circuit element — The three variations of this type of coupling (often called *direct coupling*) are shown at A, B and C of Fig. 218, utilizing common inductance, capacity, and resistance, respectively. Current circulating in one *LC* branch flows through the common element (L_m, C_m, or R_m) and the voltage developed across this element causes current to flow in the other *LC* branch. The degree of coupling between the two circuits is greater as the reactance (or resistance) of the common element is increased in comparison to the remaining reactances in the two branches.

The circuit at D shows electrostatic coupling between two resonant circuits. The coupling increases as the capacity of C_m is made greater (reactance of C_m is decreased).

Inductive coupling — Fig. 218-E illustrates inductive coupling, or coupling by means of the magnetic field. A circuit of this type resembles the iron-core transformer (§ 2-9) but because only a small percentage of the flux lines set up by one coil cut the turns of the other coil the simple relationships between turn ratio, voltage ratio, and impedance ratio in the iron-core transformer do not hold. The interlinking of the lines of force emanating from one coil with the turns of the other is measured by the *mutual inductance* between the two coils. Its value is determined by the self-inductance of each of the two coils and their position with respect to each other. The mutual inductance increases as the two coils are brought closer to each other with their axes coinciding.

Link coupling — A variation of inductive coupling called *link coupling* is shown in Fig. 219. This gives the effect of inductive coupling between two coils which may be so separated that they have no mutual inductance; the link may be considered simply as a means of providing the mutual inductance. Because mutual inductance between coil and link is involved at each end of the link, the total coupling between two link-coupled circuits cannot be made as great as when normal inductive coupling is used, but in practice this is usually not disadvantageous. Link coupling is frequently convenient in the design of equipment where inductive coupling would be impracticable because of constructional considerations.

The link coils generally have few turns compared to the resonant-circuit coils, since the coefficient of coupling (see next paragraph) is relatively independent of the number of turns on either coil.

Coefficient of coupling — The degree of coupling between two coils is a function of their mutual inductance and self-inductances:

$$k = \frac{M}{\sqrt{L_1 L_2}}$$

where k is called the *coefficient of coupling*. It is often expressed as a percentage. The coefficient

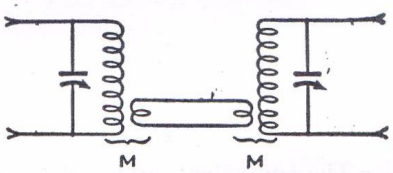

Fig. 219 — Link coupling. Mutual inductance at both ends of the link is equivalent to mutual inductance between the two tuned circuits.

of coupling cannot be greater than 1, and generally is much smaller in resonant circuits.

Critical coupling — When there is little coupling between two circuits tuned to the same frequency (*loose coupling*) each behaves much as though the other were not present. As the coupling is increased, each circuit loads the other because of the energy transfer, an effect which is equivalent to increasing the series resistance in each circuit (or reducing its parallel impedance). Hence the sharpness of resonance, or selectivity, is decreased. At *critical coupling*, maximum energy is transferred from one circuit to the other, and the overall resonance curve shows a single fairly broad peak. At still closer coupling (*tight coupling*) the energy transfer will drop off and

the overall resonance curve will show two peaks, one on either side of the frequency to which the circuits are tuned. The tighter the coupling the greater the frequency separation of the two peaks.

Critical coupling is a function of the *Q's* of the two circuits taken independently. A higher coefficient of coupling is required to reach critical coupling when the *Q's* are low; if the *Q's* are high, as in receiving applications, a coupling coefficient of a few percent may give critical coupling.

Effect of circuit Q — With loaded circuits it is not impossible for the *Q* to reach such low values that critical coupling cannot be obtained even with the highest practicable coefficient of coupling (coils as physically close as possible). In such case the only way to secure sufficient coupling is to increase the *Q* of one or both of the coupled circuits. This can be done either by decreasing the *L/C* ratio or by tapping the load down on the secondary coil (§ 2-10). One or the other of these methods often must be used in link coupling, because the maximum coefficient of coupling between two coils seldom runs higher than 50% or 60%, and the net coefficient is approximately equal to the products of the coefficients at each end of the link. If the load resistance is known beforehand, the circuits may be designed for a *Q* in the vicinity of 10 or so with assurance that sufficient coupling will be available; if unknown, the proper *Q's* can be determined by experiment.

Coupled resistance and reactance — If the two circuits are tuned to the same frequency, their effect on each other is resistive. For example, a loaded and resonant secondary will cause an apparent increase in the series resistance of the primary circuit (representing the energy dissipated in the load) which in turn causes the parallel impedance of the primary to decrease. It is by this means that the parallel impedance of the primary can, by adjustment of secondary loading and coupling, be adjusted to the optimum value for the device furnishing the power (§ 2-9).

Should the secondary circuit be slightly off tune it will have a reactive as well as resistive component, and the reactance is likewise coupled into the primary circuit. Since this in turn throws the primary off tune, the latter must be retuned to bring it back to resonance. The reflected reactance may be either inductive or capacitive. This effect occurs frequently in transmitters, where with certain types of coupling (link coupling, for instance) there may be a small amount of residual reactance in the secondary circuit.

Shielding — It is frequently necessary to *prevent* coupling between two circuits which for constructional reasons must be physically near each other. Capacitive coupling may readily be prevented by enclosing one or both of the circuits in grounded low-resistance metallic containers called *shields*. The electrostatic field from the circuit components does not penetrate the shield because the lines of force are short-circuited (§ 2-3). In many cases a metallic plate, called a *baffle shield*, inserted between two components may suffice to prevent electrostatic coupling between them, since very little of the field tends to bend around such a shield if it is large enough to make the components invisible to each other.

Similar metallic shielding is used at radio frequencies to prevent magnetic coupling. In this case the magnetic field induces a current (*eddy current*) in the shield which in turn sets up its own magnetic field opposing the original field (§ 2-5). The induced current is proportional to the frequency and also to the conductivity of the shield, hence the shielding effect increases with frequency and the conductivity and thickness of the shielding material. A closed shield is required for good magnetic shielding; in some cases separate shields, one about each coil, may be required. The baffle

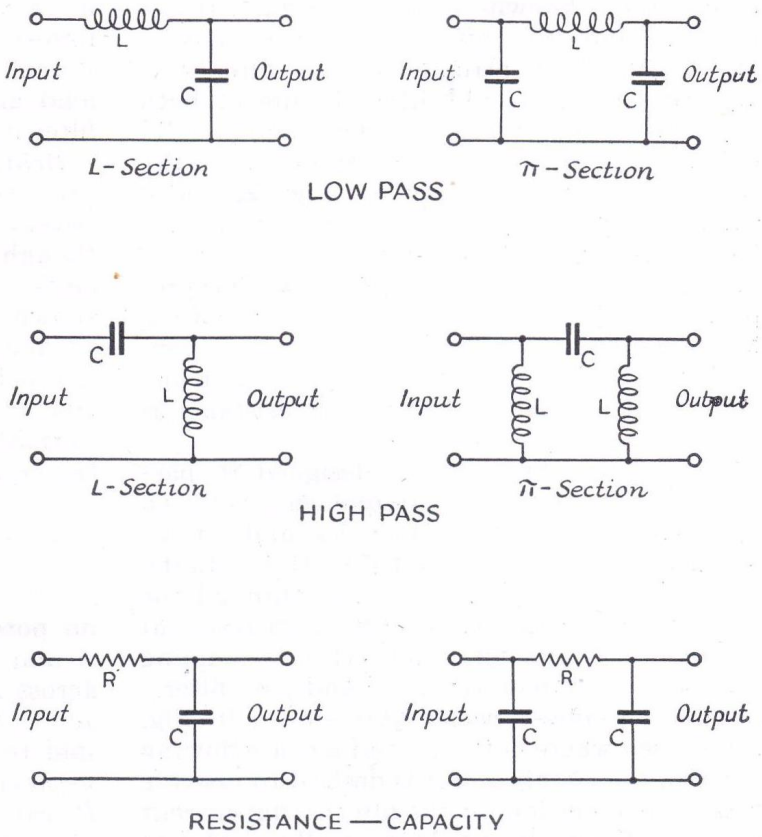

Fig. 220 — Simple filter circuits.

shield is rather ineffective for magnetic shielding, although it will give partial shielding if placed at right angles to the axes of, as well as between, the two coils to be shielded from each other.

Cancellation of part of the field of the coil reduces its inductance, and since some energy is dissipated in the shield, the effective resistance of the coil is raised as well, hence the coil Q is reduced. The effect of shielding on coil Q and inductance becomes less as the distance between the coil and shield is increased. The losses also decrease with an increase in the conductivity of the shield material. Copper and aluminum are satisfactory materials. The Q and inductance will not be greatly reduced if the spacing between the sides of the coil and the shield is at least half the coil diameter, and is not less than the coil diameter at the ends of the coil.

At audio frequencies the shielding container is made of magnetic material, preferably of high permeability (§ 2-5) to short-circuit the external flux about the coil to be shielded. A non-magnetic shield is quite ineffective at these low frequencies because the induced current is small.

Filters — By suitable choice of circuit elements, a coupling system may be designed to pass without undue attenuation all frequencies below and reject all frequencies above a certain value called the *cut-off frequency*. Such a coupling system is called a *filter*, and in the above case is known as a *low-pass filter*. If frequencies above the cut-off frequency are passed and those below attenuated, the filter is a *high-pass filter*. Simple filter circuits of both types are shown in Fig. 220. The fundamental circuit from which more complex filters are constructed is the *L-section*. Fig. 220 also shows *π-section* filters, constructed from the basic L-section and frequently encountered in both low-frequency and r.f. circuits. The proportions of L and C for proper operation of the filters depend upon the load resistance connected across the output terminals, L being larger and C smaller as the load resistance is increased.

A *band-pass* filter is one designed to pass without attenuation all frequencies between two selected cut-off frequencies and to attenuate all frequencies outside these limits. The group of frequencies passed through the filter is called the *pass-band*. Two resonant circuits with greater than critical coupling represent a common form of band-pass filter.

The *resistance-capacity filter* shown in Fig. 220 is used where both d.c. and a.c. are flowing through the circuit and it is desired to provide greater attenuation for the alternating current than the direct current. It is usually employed where the direct current has a low value so

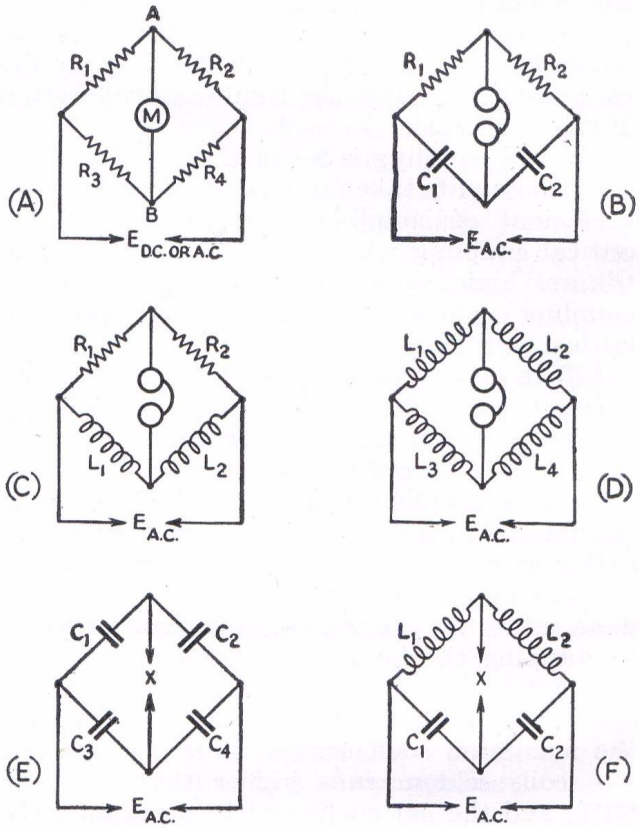

Fig. 221 — **Bridge circuits utilizing resistance, inductance and capacity, alone and in combination.**

that the d.c. voltage drop is not excessive, or when a d.c. voltage drop actually is required. The time constant (§ 2-6) of the filter must be large compared to the time of one cycle of the lowest frequency to be attenuated. In determining the time constant, the resistance of the load must be included as well as that in the filter itself.

Bridge circuits — A *bridge circuit* is a device primarily used in making measurements of resistance, reactance or impedance (§ 2-8), although it has other applications in radio circuits. The fundamental form of bridge is shown in Fig. 221-A. It consists of four resistances (called *arms*) connected in series-parallel to a source of voltage E, with a sensitive galvanometer M connected between the junctions of the series-connected pairs. When the equation

$$\frac{R_1}{R_2} = \frac{R_3}{R_4}$$

is satisfied no current flows through M because no potential difference exists between points A and B since the drop across R_2 equals that across R_4, and the drop across R_1 equals that across R_3. Under these conditions the bridge is said to be *balanced*. If R_3 is an unknown resistance and R_4 is a variable known resistance, R_3 can be found from the following equation, after R_4 has been adjusted to balance the bridge (*null* indication on M):

$$R_3 = \frac{R_1}{R_2} R_4$$

R_1 and R_2 are known as the *ratio arms* of the bridge; the ratio of their resistances is usually adjustable (frequently in steps of 1, 10, 100, etc.) so that a single variable resistor R_4 can serve as a standard for measuring widely different values of unknown resistance.

Bridges can be similarly formed with condensers, inductances, and combinations of resistance with either. Typical simple arrangements are shown in Fig. 221. For measurements with alternating currents the bridge must not introduce phase shifts which would destroy the balance, hence similar impedances should be used in each branch, as shown in Fig. 221, and the *Q's* of the coils and condensers should be the same. When bridges are used at audio frequencies a telephone headset is a good null indicator. The bridges at E and F are commonly-used r.f. neutralizing circuits (§ 4-7); the voltage from the source E_{ac} is balanced out at X.

• 2-12 LINEAR CIRCUITS

Standing waves — If an electrical impulse is started along a wire it will travel at approximately the speed of light until it reaches the end. If the end of the wire is open circuited, the impulse will be *reflected* at this point and travel back again. When a high-frequency alternating voltage is applied to the wire a current will flow toward the open end, and reflection will occur continuously. If the wire is long enough so that time comparable to a half cycle or more is required for current to travel to the open end, the phase relations between the reflected current and outgoing current will vary along the wire, and at one point the two currents will be 180 degrees out of phase and at another in phase, with intermediate values between. Assuming negligible losses, this means that the resultant current will vary in amplitude from zero to a maximum value along the wire. Such a variation is called a *standing wave*. The voltage along the wire also goes through standing waves, but reaches its maximum values where the current is minimum, and vice versa.

Frequency and Wavelength — It is possible to describe the constants of such line circuits in terms of inductance and capacitance, or inductance and capacitance per unit length, but it is more convenient to give them simply in terms of fundamental resonant frequency or of length. In the case of a straight-wire circuit, *length is inversely proportional to lowest resonant frequency*. Since the velocity is 300,000 kilometers (186,000 miles) per second, the *wavelength* is

$$\lambda = \frac{300{,}000}{f_{kc.}}$$

where λ is the wavelength in meters and $f_{kc.}$ is the frequency in kilocycles. The lowest frequency at which the wire or line will be resonant is known as its *fundamental* frequency or wavelength. It is common to describe lines (or antennas, which have similar current and voltage distribution) as *half-wave*, *quarter-wave*, etc., for a certain frequency ("half-wave 7000-kc. antenna," for instance).

Wavelength is also used interchangeably with frequency in describing not only antennas but also for tuned circuits, complete transmitters, receivers, etc. Thus the terms "high-frequency receiver" and "short-wave receiver," or "75-meter fundamental antenna" and "4000-kilocycle fundamental antenna," are synonymous.

Harmonic resonance — Although a coil-condenser combination having lumped constants (capacitance and inductance) resonates at only one frequency, circuits such as antennas containing distributed constants resonate readily at frequencies which are very nearly integral multiples of the fundamental frequency. These frequencies are therefore in *harmonic* relationship to the fundamental frequency and, hence, are referred to as *harmonics* (§ 2-7). In radio practice the fundamental itself is called the *first harmonic*, the frequency

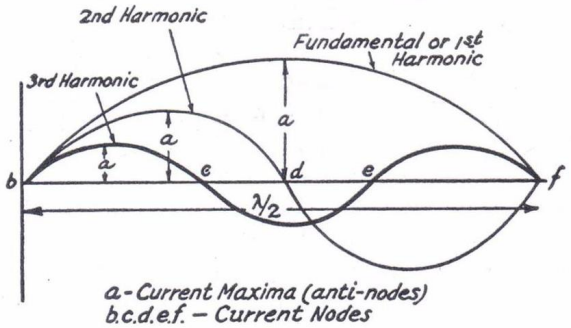

Fig. 222 — **Standing-wave current distribution on a wire operating as an oscillatory circuit at its fundamental, second harmonic and third harmonic frequencies.**

twice the fundamental is called the *second harmonic*, and so on.

Fig. 222 illustrates the distribution of current on a wire for fundamental, second and third harmonic excitation. There is one point of maximum current with fundamental operation, two when operation is at the second harmonic and three at the third harmonic; the number of current maxima corresponds to the order of the harmonic and the number of standing waves on the wire. As noted in the figure, the points of maximum current are called *anti-nodes* (also known as "loops") and the points of zero current are called *nodes*.

Radiation resistance — Since a line circuit has distributed inductance and capacity, current flow causes storage of energy in magnetic and electrostatic fields (§ 2-3, 2-5). At low frequencies practically all the energy so stored is returned to the wire during another part of the cycle (§ 2-8) but above 15,000 cycles or so (radio frequency) some escapes — is radiated — in the form of electromagnetic waves. Energy radiated by a line or antenna is equivalent to energy dissipated as in a resistor. The value of this equivalent resistance is known as *radiation resistance.*

Resonant line circuits — The effective resistance of a resonant straight wire such as an antenna is considerable, because of the power radiated. The resonance curve of such a straight-line circuit is quite broad; in other words, its Q is relatively low. However, by folding the line, as suggested by Fig. 223, the fields about the adjacent sections largely cancel each other and very little radiation takes place. The radiation resistance is greatly reduced and the line-type circuit can be made to have a very sharp resonance curve or high Q.

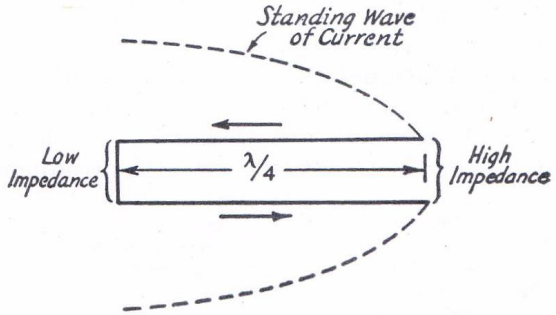

Fig. 223 — Standing wave and instantaneous current (arrows) conditions of a folded resonant-line circuit.

A circuit of this type will have a standing wave on it, as shown by the dash-line of Fig. 223, with the instantaneous current flow in each wire opposite in direction to the flow in the other, as indicated by the arrows on the diagram. This opposite current flow accounts for the cancellation of radiation, since the fields about the two wires oppose each other. Furthermore, the impedance across the open ends of the line will be very high, thousands of ohms, while the impedance across the line near the closed end will be very low.

A folded line may be made in the form of two concentric conductors, as shown in Fig. 224. The *concentric line* has even lower radiation resistance than the folded wire line, since the outer conductor acts as a shield. Standing waves exist, but are confined to the outside of the inner conductor and the inside of the outer conductor, since skin effect prevents the currents from penetrating to the other sides. Thus such a line will have no radio-frequency potentials on its exposed surfaces. Because of

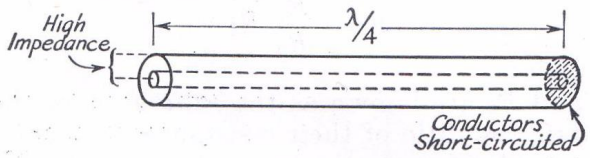

Fig. 224 — A concentric line resonant circuit.

the low radiation resistance and relatively large conducting surfaces, such lines can be made to have much higher Q's than are attainable with coils and condensers. They are most applicable at ultra-high frequencies (very short wavelengths) (§ 2-7) where dimensions are small.

• 2-13 CIRCUITS WITH SUPERIMPOSED CURRENTS

Combined a.c. and d.c. — There are many practical instances of simultaneous flow of alternating and direct current in a circuit. When this occurs there is a *pulsating* current and it is said that an alternating current is *superimposed* on a direct current. As shown in Fig. 225, the maximum value is equal to the d.c. value plus the a.c. maximum, while the minimum value (on the negative a.c. peak) is the difference between the d.c. and the maximum a.c. values. The average value (§ 2-7) of the current is simply equal to the direct-current component alone. The effective value (§ 2-7) of the combination is equal to the square root of the sum of the effective a.c. squared and the d.c. squared:

$$I = \sqrt{I_{ac}^2 + I_{dc}^2}$$

where I_{ac} is the effective value of the a.c. component, I is the effective value of the combination and I_{dc} is the average (d.c.) value of the combination.

Beats — If two or more alternating currents of different frequencies are present in a normal circuit, they have no particular effect upon one another and, for this reason, can be separated again at any time by the proper selective circuits. However, if two (or more) alternating currents of different frequencies are present in an element having unilateral or one-way current flow properties, not only will the two original frequencies be present in the output but also currents having frequencies equal to the sum, and difference, of the original fre-

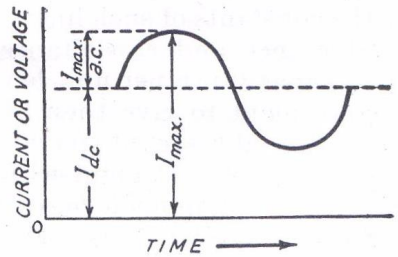

Fig. 225 — Pulsating current composed of alternating current superimposed on direct current.

quencies. These sum and difference frequencies are called the *beat* frequencies. For example, if frequencies of 2000 and 3000 kc. are present in a normal circuit, only those two frequencies exist, but if they are passed through a unilateral-element (such as a properly-adjusted vacuum tube) there will be present in the output not only the two original frequencies of 2000 and 3000 kc. but also currents of 1000 (3000 − 2000) and 5000 (3000 + 2000) kc. Suitable circuits can select the desired beat frequency.

By-passing — In combined circuits it is frequently necessary to provide a low-impedance path for a.c. around, for instance, a source of d.c. voltage. This can be done by using a *by-pass condenser*, which will not pass direct current but will readily permit the flow of alternating current. The capacity of the condenser should be of such value that its reactance is low (of the order of 1/10th or less) compared to the a.c. impedance of the device being by-passed. The lower the reactance, the better is the a.c. confined to the desired path.

Similarly, alternating current can be prevented from flowing through a direct-current circuit to which it may be connected by inserting an inductance of high reactance (called a *choke coil*) between the two circuits. This will permit the d.c. to flow without hindrance, since the resistance of the choke coil may be made quite low, but will effectively prevent the a.c. from flowing where it is not wanted.

If both r.f. and low-frequency (audio or power frequencies) currents are present in a circuit, they may be confined to desired paths by similar means, since an inductance of high reactance for radio frequency will have negligible reactance at low frequencies, while a condenser of low reactance at radio frequencies will have high reactance at low frequencies.

Grounds — The term "ground" is frequently met in discussions of circuits, and normally means the voltage reference point in the circuit. There may or may not be an actual connection to earth, but it is understood that a point in the circuit said to be at *ground potential* could be connected to earth without disturbing the operation of the circuit in any way. In direct-current circuits the negative side is generally grounded. The ground symbol in circuit diagrams is used for convenience in indicating common connections between various parts of the circuit, and with respect to actual ground usually has the meaning indicated above.

CHAPTER THREE

Vacuum Tubes

● 3-1 DIODES

Rectification — Practically all of the vacuum tubes used in radio work depend upon thermionic conduction (§ 2-4) for their operation. The simplest type of vacuum tube is that shown in Fig. 301. It has two elements, cathode and plate, and is called a *diode*. The cathode is heated by the "A" battery and emits electrons which flow to the plate when the plate is at a positive potential with respect to the cathode. Because of the nature of thermionic conduction, the tube is a conductor in one direction only. If a source of alternating voltage is connected between the cathode and plate, then electrons will flow only on the positive half-cycles of alternating voltage; there will be no electron flow during the half cycle when the plate is negative. Thus the tube can be used as a *rectifier*, to change alternating current to pulsating direct current. This alternating current can be anything from the 60-cycle kind to the highest radio frequencies.

Characteristic curves — The performance of the tube can be reduced to easily-understood terms by making use of *tube characteristic curves*. A typical characteristic curve for a diode is shown at the right in Fig. 301. It shows the current flowing between plate and cathode with different d.c. voltages applied between the elements. The curve of Fig. 301 shows that, with fixed cathode temperature, the plate current increases as the voltage between cathode and plate is raised. For an actual tube the values of plate current and plate voltage would be plotted along their respective axes.

The power consumed in the tube is the product of the plate voltage multiplied by the plate current, just as in any d.c. circuit. In a vacuum tube this power is dissipated in heat developed in the plate and radiated to the bulb.

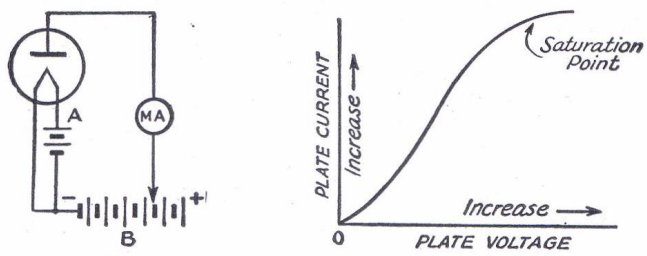

Fig. 301 — The diode or two-element tube and a typical characteristic curve.

Space charge — With the cathode temperature fixed, the total number of electrons emitted is always the same regardless of the plate voltage. Fig. 301 shows, however, that less plate current will flow at low plate voltages than when the plate voltage is large. With low plate voltage only those electrons nearest the plate are attracted to the plate. The electrons in the space near the cathode, being themselves negatively charged, tend to repel the similarly-charged electrons leaving the cathode surface and cause them to fall back on the cathode. This is called the *space charge* effect. As the plate voltage is raised, more and more electrons are attracted to the plate until finally the space charge effect is completely overcome and all the electrons emitted by the cathode are attracted to the plate, and a further increase in plate voltage can cause no increase in plate current. This is called the *saturation point.*

● 3-2 TRIODES

Grid control — If a third element, called the *control grid*, or simply the *grid*, is inserted between the cathode and plate of the diode the space-charge effect can be controlled. The tube then becomes a *triode* (three-element tube) and is useful for more things than rectification. The grid is usually in the form of an open spiral or mesh of fine wire. With the grid connected externally to the cathode and with a steady voltage from a d.c. supply applied between the cathode and plate (the positive of the "B" supply is always connected to the plate), there will be a constant flow of electrons from cathode to plate, through the openings of the grid, much as in the diode. But if a source of variable voltage is connected between the grid and cathode there will be a variation in the flow of electrons from cathode to plate (a variation in plate current) as the voltage on the grid changes about a mean value. When the grid is made less negative (more positive) with respect to the cathode, the space charge is partially neutralized and there will be an increase in plate current; when the grid is made more negative with respect to the cathode, the space charge is reinforced and there will be a decrease in plate current.

Amplification — The grid thus acts as a

valve to control the flow of plate current, and it is found that it has a much greater effect on plate current flow than does the plate voltage; that is, a small change in grid voltage is just as effective as a large change in plate voltage in bringing about a change in plate current. When a resistance or impedance (*load*) is connected in series in the plate circuit, the voltage drop across it, which is a function of the plate current through it, can therefore be changed by varying the grid voltage as well as by giving the plate voltage a new value. Thus a small change in grid voltage will cause a large change in voltage drop across the impedance; in other words, the grid voltage is *amplified* in the plate circuit.

So long as the grid has a negative potential with respect to the cathode, electrons emitted by the cathode are repelled (§ 2-3) with the result that no current flows to the grid. Hence under these conditions the grid consumes no power. However, when the grid becomes positive with respect to the cathode, electrons are attracted to it and a current flows to the grid; when this *grid current* flows power is dissipated in the grid circuit.

Characteristics — The measure of the amplification of which a tube is capable is known as its *amplification factor*, designated by μ (mu). Mu is the ratio of plate-voltage change required for a given change in plate current to the grid-voltage change necessary to produce the same change in plate current. Another important characteristic is the *plate resistance*, designated r_p. It is the ratio, for a fixed grid voltage, of a small plate voltage change to the plate current change it effects. It is expressed in *ohms*. Still another important characteristic used in describing the properties of a tube is *grid-plate transconductance*, or *mutual conductance*, designated by g_m and defined as the rate of change of plate current with respect to a change in grid voltage. The mutual conductance is a rough indication of the design merit of the tube. It is expressed in *micromhos* (the *mho* is the unit of conductance and is equal to $1/R$) and is the ratio of amplification factor to plate resistance, multiplied by one million. These tube characteristics are interrelated and are dependent primarily on the tube structure.

Static and dynamic curves — The operation of a vacuum tube amplifier is graphically represented in elementary form in Fig. 302. The sloping line represents the variation in plate current obtained at a constant plate voltage with grid voltages ranging from a value sufficiently negative to reduce the plate current to zero, to a value slightly positive. Grid voltage is specified with reference to the cathode or filament. Notable facts about this curve are that it is essentially a straight line (is *linear*)

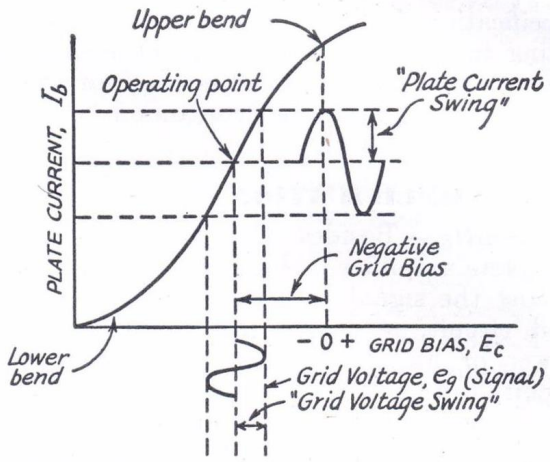

Fig. 302 — Operating characteristics of a vacuum-tube amplifier. Class-A amplifier operation is depicted.

over the middle section and that it bends towards the bottom (near *cut-off*) and near the top (*saturation*). In other words, the variation in plate current is directly proportional to the variation in grid voltage over the region between the two bends. With a fixed grid voltage (*bias*) of proper value the plate current can be set at any desired value.

Tube characteristics of the type shown in Fig. 302 may be of either the *static* or *dynamic* type. Static characteristics show the plate current that will flow at specific grid and plate voltages in the absence of any output device in the plate circuit for transferring the plate current variation to an external circuit, while the dynamic characteristic shows the behavior of the same quantities when there is a load in the plate circuit, and thus represents the actual operation of the tube as an amplifier.

Interelectrode capacities — Any pair of elements in a tube forms a miniature condenser (§ 2-3), and although the capacities of these condensers may be only a few micromicrofarads or less, they must frequently be taken into account in vacuum-tube circuits. The capacity from grid to plate (*grid-plate capacity*) has an important effect in many applications. In triodes, the other capacities are the *grid-cathode* and *plate-cathode*. In multi-element tubes (§ 3-5) similar capacities exist between these and other electrodes. With screen-grid tubes, the terms "input" and "output" capacity mean, respectively, the capacity measured from grid to all other elements connected together, and from plate to all other elements connected together. The same terms are used with triodes but are not so easily defined since the effective capacities existing depend upon the operating conditions (§ 3-3).

Tube ratings — Specifications of suitable operating voltages and currents are called *tube ratings*. Ratings include proper values for filament or heater voltage and current, plate voltage and current, and similar operating

specifications for other elements. An important rating in power tubes is the *maximum safe plate dissipation*, which is the maximum power which can be dissipated continuously in heat on the plate (§ 3-1).

• 3-3 AMPLIFICATION

Circuits — Besides the vacuum tube, a complete amplifier includes a means for introducing the signal or *exciting voltage* into the grid circuit, a means (the *load*) for taking power or amplified voltage from the plate circuit, and sources of supply for bias voltage, power for heating the cathode, and d.c. power for the plate circuit. A representative circuit for audio-frequency amplification is shown in Fig. 303. The signal is introduced into the grid circuit in series with the bias voltage by means of transformer T_1, and T_2 serves as a means for transferring the amplified signal from the plate circuit to the load. Battery supplies are indicated for simplicity.

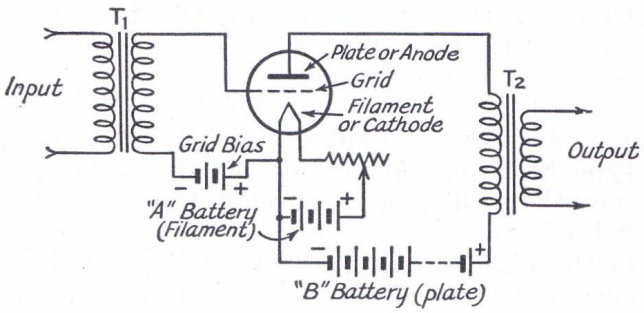

Fig. 303 — A typical audio-frequency amplifier using a triode tube.

A single amplifier such as is shown in Fig. 303 is called an *amplifier stage*, and several such stages may be used in *cascade*, the output of one stage being fed to the grid circuit of the next, to provide large amounts of overall amplification.

Load impedance — The load connected in the output or plate circuit of the tube is called the *load impedance* or *load resistance*, and designated R_p. It is the device in which the power output of the tube is consumed. In some types of amplifiers the load is an actual resistance, but in most cases it is a resistive impedance; that is, it shows resistance for a.c. but not for d.c. This type of load can be obtained with a resonant circuit (§ 2-10) or by coupling through a transformer to a power-consuming device (§ 2-9). The impedance load has the advantage that there is no drop in d.c. plate voltage across the load as there would be in the case of the resistor, since the latter has the same resistance for d.c. as for a.c.

In general, there will be one value of R_p which will give optimum results for a given type of tube and set of operating voltages; its value also depends upon the type of service for which the amplifier is designed. If the impedance of the actual device used is considerably different from the optimum load impedance, the tube and output device can be coupled through a transformer having a turns ratio such that the impedance reflected into the plate circuit of the tube is the optimum value (§ 2-9).

Operating point and grid bias — As indicated in Fig. 302, the relationship between varying grid voltage and plate current will be determined by the grid bias (§ 3-2), which sets the *operating point* on the characteristic curve. The choice of operating point depends upon the type of service in which the tube is to be used.

Distortion — With negative grid bias as shown in Fig. 302 the operating point comes in the middle of the linear region. If an alternating voltage (*signal*) is now applied to the grid in series with the grid bias, the grid voltage swings more and less negative about the mean bias voltage value and the plate current swings up (positive) and down (negative) about the mean plate current value. This is equivalent to an alternating current superimposed on the steady plate current. At this operating point it is evident that the plate current wave shapes (§ 2-7) are identical reproductions of the grid voltage wave shapes and will remain so as long as the grid voltage amplitude does not reach values sufficient to run into the lower- or upper-bend regions of the curve. If this occurs the output waves will be flattened or *distorted*. If the operating point is set towards the bottom or the top of the curve there will also be distortion of the output wave shapes because part or all of the lower or upper half-cycles will be cut off.

Whenever the bias is adjusted so that the tube works over a non-linear portion of its characteristic curve, distortion will take place and the output wave-form will not duplicate the wave-form of the voltage introduced at the grid. This characteristic of *non-linearity* of an amplifier is useful in some applications but is an undesirable feature in others. The distortion will take the form of harmonics added to the original wave (§ 2-7). If the exciting signal is a sine wave, the output wave, when distortion is present, will consist of the fundamental plus harmonics.

Another type of distortion, known as *frequency distortion*, occurs when the amplification varies with the frequency of the a.c. voltage applied to the grid circuit of the amplifier. It is not necessarily accompanied by harmonic distortion. It can be shown by a *frequency response curve*, or graph in which the relative amplification is plotted against frequency over the frequency range of interest.

Voltage amplification — The ratio of the alternating output voltage derived from the plate circuit to the alternating voltage applied to the grid circuit is called the *voltage amplification* of the amplifier. A *voltage amplifier* is one in which this ratio is the primary consideration, rather than the power which may be taken from the output circuit. The load resistance for voltage amplification must be high to give a large voltage across its terminals.

Power amplification — The ratio of output power to a.c. power consumed in the grid circuit (*driving power*) is called the *power amplification* of the amplifier. A *power amplifier* is one designed to deliver power to a load circuit, the voltage amplification being incidental. The power amplification ratio may be practically infinite in certain types of amplifiers. The load impedance for power amplification is selected either to give maximum power with minimum distortion or to give a desired value of plate efficiency.

Plate efficiency — The ratio of output power to d.c. input power to the plate (plate current multiplied by plate voltage) is called the *plate efficiency* of the amplifier. Plate efficiency is generally low in amplifiers designed primarily for minimum distortion, but may be made quite high when distortion is permissible.

Power sensitivity — This is the ratio of output power to alternating grid voltage, and is ordinarily used in connection with amplifiers operating in such a way that no power is consumed in the grid circuit. The same term also is used frequently in connection with radio-frequency power amplifiers, but in this case has the same meaning as power amplification ratio, defined above.

Phase relations in plate and grid circuits — When the exciting voltage on the grid has its maximum positive instantaneous value the plate current also is maximum (§ 3-2) so that the voltage drop across the impedance connected in the plate circuit likewise has its greatest value. The actual instantaneous voltage between plate and cathode is therefore minimum at the same instant, because it is equal to the d.c. supply voltage (which is unvarying) minus the voltage drop across the load impedance. Since the decrease in instantaneous plate voltage is negative in sense, this means that the alternating plate voltage is 180 degrees out of phase with the alternating grid voltage. Thus there is a *phase reversal* through an amplifier tube.

Input capacity — When an alternating voltage is applied between grid and cathode of the amplifier tube an alternating current flows in the small condenser formed by these elements (§ 3-2), just as it would in any other condenser (§ 2-8). Similarly, an alternating current also flows in the condenser formed by the grid and plate, but since the instantaneous voltage between these two elements is considerably larger than the signal voltage when the tube is amplifying, the current in the grid-plate capacity is likewise larger than it would be were no amplification taking place. Looked at from the grid circuit, the increased current is equivalent to an increase in input capacity of the tube, and the *effective* input capacity may be many times that which would be expected from consideration of the interelectrode capacities alone. The effective input capacity is proportional to the actual grid-plate capacity and to the voltage amplification.

Feedback — Some of the amplified energy in the plate circuit can be coupled back into the grid circuit to be re-amplified, this process being called *feedback*. If the voltage induced in the grid circuit is in phase with the grid signal voltage, the feedback is called *positive*, and the resultant voltage is larger and hence the amplification is increased. Positive feedback, usually called *regeneration*, can effectively increase the amplification of a stage many times. If the fed-back voltage is opposite in phase to the exciting voltage, the feedback is called *negative* and, since the resultant grid voltage is smaller, the amplification is decreased. Negative feedback is sometimes called *degeneration*.

Positive feedback is accompanied by a tendency to give maximum amplification at only one frequency, even though the input and output circuits may not otherwise be resonant. It therefore increases the selectivity of the amplifier and hence is used chiefly where high gain and sharpness of resonance are both wanted.

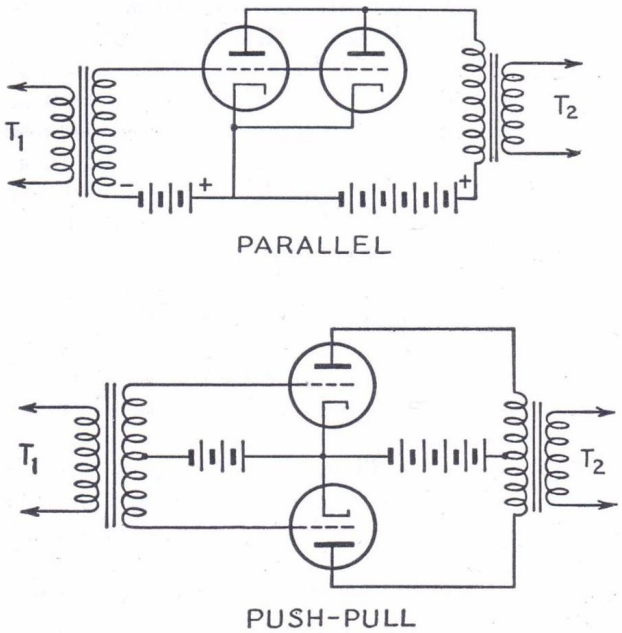

Fig. 304 — Parallel and push-pull amplifier connections.

Negative feedback has the opposite characteristics. It tends to widen the frequency range of the amplifier, even with resonant input and output circuits. It also reduces distortion and makes the amplifier tube more tolerant of changes in load impedance. Hence it is used where low-distortion, wide frequency range amplification is wanted, as in some audio circuits, even though amplification is sacrificed.

Parallel operation — When it is necessary to obtain more power output than one tube is capable of giving, without going to a larger tube structure, two or more tubes may be connected in *parallel*, in which case the similar elements in all tubes are connected together as shown in Fig. 304. The power output will then be in proportion to the number of tubes used; the exciting voltage required, however, is the same as for one tube.

If the amplifier operates in such a way as to consume power in the grid circuit, the grid power required also is in proportion to the number of tubes used.

Push-pull operation — An increase in power output can be secured by connecting two tubes in *push-pull*, the grids and plates of the two tubes being connected to opposite ends of the circuit as shown in Fig. 304. A "balanced" circuit, in which the cathode returns are made to the midpoint of the input and output devices, is necessary with push-pull operation. At any instant the ends of the secondary winding of the input transformer, T_1, will be at opposite potentials with respect to the cathode connection, so the grid of one tube is swung positive at the same instant that the grid of the other is swung negative. Hence, in any push-pull-connected stage the voltages and currents of one tube are out of phase with those of the other tube. The plate current of one tube therefore is rising while the plate current of the other is falling, hence the name "push-pull." In push-pull operation the even-harmonic (second, fourth, etc.) distortion is cancelled in the symmetrical plate circuit, so that for the same output the distortion will be less than with parallel operation.

The exciting voltage measured between the two grids must be twice that required for one tube. If the grids consume power, the driving power for the stage is twice that taken by either tube alone.

The decibel — The ratio of the power levels at two points in a circuit such as an amplifier can be expressed in terms of a unit called the *decibel*, abbreviated *db*. The number of decibels is 10 times the logarithm of the power ratio, or

$$db. = 10 \log \frac{P_1}{P_2}$$

The decibel is a particularly useful unit because it is logarithmic, and thus corresponds to the response of the human ear to sounds of varying loudness. One decibel is approximately the power ratio required to make a just noticeable difference in sound intensity. Within wide limits, changing the power by a given ratio produces the same apparent change in loudness regardless of the power level; thus if the power is doubled the increase is 3 db., or three steps of intensity; if it is doubled again, the increase is again 3 db., or three further distinguishable steps. Successive amplications expressed in decibels can be added to obtain the overall amplification.

A power loss also can be expressed in decibels. A decrease in power is indicated by a minus sign (e.g., − 7 db.), and increase in power by a plus sign (e.g., + 4 db.). Negative and positive quantities can be added numerically. Zero db. indicates the reference power level, or a power ratio of 1.

Applications of amplification — The major uses of vacuum tube amplifiers in radio work are to amplify at audio and radio frequencies (§ 2-7). The audio-frequency amplifier is generally used to amplify without discrimination at all frequencies in a wide range (say from 100 to 3000 cycles for voice communication), and is therefore associated with non-resonant or untuned circuits which offer a uniform load over the desired range. The radio-frequency amplifier, on the other hand, is generally used to amplify selectively at a single radio frequency, or over a small band of frequencies at most, and is therefore associated with resonant circuits tunable to the desired frequency.

An audio-frequency amplifier may be considered a *broad-band amplifier;* most radio-frequency amplifiers are relatively narrow-band affairs.

In audio circuits, the power tube or output tube in the last stage usually is designed to deliver a considerable amount of audio power, while requiring but negligible power from the input or exciting signal. To get the alternating voltage (*grid swing*) required for the grid of such a tube voltage amplifiers are used, employing tubes of high μ which will greatly increase the voltage amplitude of the signal. Voltage amplifiers are used in the radio-frequency stages of receivers as well as in audio amplifiers; power amplifiers are used in r.f. stages of transmitters.

• 3-4 CLASSES OF AMPLIFIERS

Reason for classification — It is convenient to divide amplifiers into groups according to the work they are intended to perform, as related to the operating conditions necessary to accomplish the purpose. This makes identi-

fication easy and obviates the necessity for giving a detailed description of the operation when *specific* operating data are not required.

Class A — An amplifier operated as shown in Fig. 302 in which the output wave shape is a faithful reproduction of the input wave shape, is known as a *Class-A* amplifier.

As generally used, the grid of a Class-A amplifier never is driven positive with respect to the cathode by the exciting signal, and never is driven so far negative that plate-current cut-off is reached. The plate current is constant both with and without grid excitation. The chief characteristics of the Class-A amplifier are low distortion, low power output for a given size of tube, and a high power-amplification ratio. The plate efficiency (§ 3-3) is relatively low, being in the vicinity of 20 to 35 percent at full output, depending upon the design of the tube and the operating conditions.

Class-A amplifiers of the power type find application as output amplifiers in audio systems. Class-A voltage amplifiers are found in the stages preceding the power stage in such applications, and as radio-frequency amplifiers in receivers.

Class B — The *Class-B* amplifier is primarily one in which the output current, or alternating component of the plate current, is proportional to the amplitude of the exciting grid voltage. Since power is proportional to the square of the current, the power output of a Class-B amplifier is proportional to the square of the exciting grid voltage.

The distinguishing operating condition in Class-B service is that the grid bias is set so that the plate current is relatively low without excitation; the exciting signal amplitude is such that the entire linear portion of the tube's characteristic is used. Fig. 305 illustrates Class-B operation with the tube biased practically to cut-off. In this operating condition plate current flows only during the positive half-cycle of excitation voltage. No plate current flows during the negative swing of the excitation voltage. The shape of the plate current pulse is essentially the same as that of the positive swing of the signal voltage. Since the plate current is driven up toward the saturation point, it is usually necessary for the grid to be driven positive with respect to the cathode during part of the grid swing. Grid current flows, therefore, and the driving source must furnish power to supply the grid losses.

Class-B amplifiers are characterized by medium power output, medium plate efficiency (50% to 60% at maximum signal) and a moderate ratio of power amplification. At radio frequencies they are used as *linear amplifiers* to raise the output power level in radiotelephone transmitters after modulation has taken place.

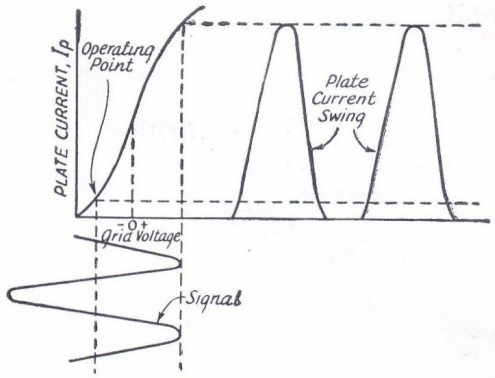

Fig. 305 — Operation of the Class-B amplifier.

For audio-frequency amplification two tubes must be used. The second tube, working alternately with the first, must be included so that both halves of the cycle will be present in the output. A typical method of arranging the tubes and circuit to this end is shown in Fig. 306. The signal is fed to a transformer T_1, whose secondary is divided into two equal parts, with the tube grids connected to the outer terminals and the grid bias fed in at the center. A transformer T_2 with a similarly-divided primary is connected to the plates of the tubes. When the signal swing in the upper half of T_1 is positive, Tube No. 1 draws plate current while Tube No. 2 is idle; when the lower half of T_1 becomes positive, Tube No. 2 draws plate current while Tube No. 1 is idle. The corresponding voltages induced in the halves of the primary of T_2 combine in the secondary to produce an amplified reproduction of the signal wave-shape with negligible distortion. The Class-B amplifier is capable of delivering much more power for a given tube size than a Class-A amplifier.

Class AB — The similarity between Fig. 306 and the ordinary push-pull amplifier circuit (§ 3-3) will be noted. Actually the circuits are the same, the difference being in the method of operation. If the bias is adjusted so that the tubes draw a moderate value of plate current the amplifier will operate Class A at low signal voltages and more nearly Class B at high signal voltages. An amplifier so operated is called *Class AB*. The advantages of this method are low distortion at moderate signal levels and higher efficiency at high levels, so that relatively small tubes can be used to good advantage in audio power amplifiers.

A further distinction can be made between amplifiers which draw grid current and those which do not. The *Class-AB*$_1$ amplifier draws no grid current and thus consumes no power from the driving source; the *Class-AB*$_2$ amplifier draws grid current at higher signal levels and power must therefore be supplied to its grid circuit.

Class C — The *Class-C* amplifier is one operated so that the alternating component of

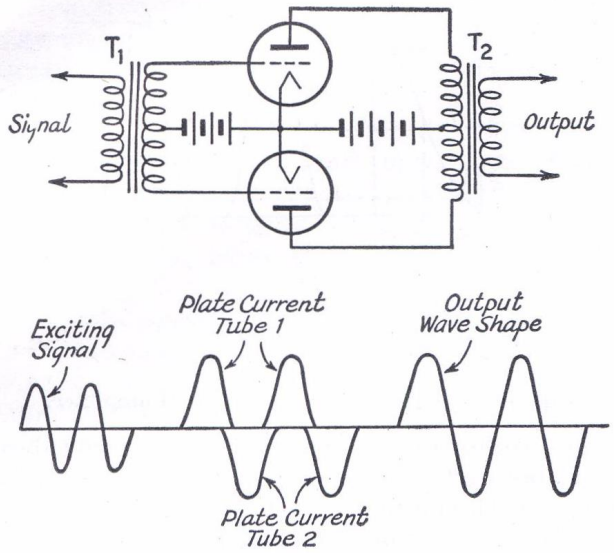

Fig. 306 — The Class-B audio amplifier, showing how the outputs of the two tubes are combined to give distortionless amplification.

the plate current is directly proportional to the plate voltage. The output power is therefore proportional to the square of the plate voltage. Other characteristics inherent to Class-C operation are high plate efficiency, high power output, and a relatively low power-amplification ratio.

The grid bias for a Class-C amplifier is ordinarily set at approximately twice the value required for plate current cut-off without grid excitation. As a result, plate current flows during only a fraction of the positive excitation cycle. The exciting signal should be of sufficient amplitude to drive the plate current to the saturation point, as shown in Fig. 307. Since the grid must be driven far into the positive region to cause saturation, considerable numbers of electrons are attracted to the grid at the peak of the cycle, robbing the plate of some that it would normally attract. This causes the droop at the upper bend of the characteristic, and also causes the plate current pulse to be indented at the top, as shown. Although the output wave-form is badly distorted, at radio frequencies the distortion is largely eliminated by the flywheel effect of the tuned output circuit.

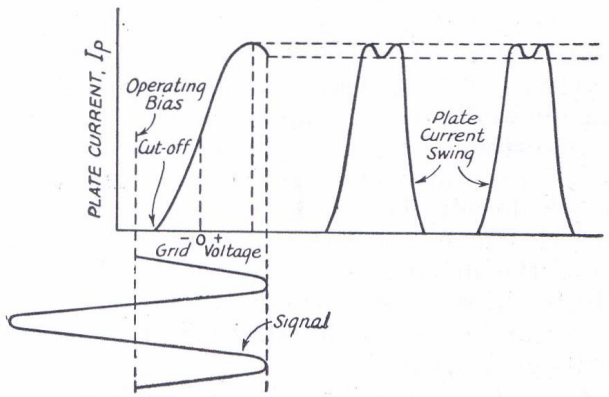

Fig. 307 — Class-C amplifier operation.

Although requiring considerable driving power because of the relatively large grid swing and grid-current flow, the high plate efficiency (ordinarily 70–75%) of the Class-C amplifier makes it an effective generator of radio-frequency power.

• 3-5 MULTIELEMENT AND SPECIAL-PURPOSE TUBES

Radio-frequency amplification — In a radio-frequency amplifier the input (grid) and output (plate) circuits must be tuned to the same frequency for maximum amplification and selectivity. If a triode tube is used in such an arrangement the feedback through the grid-plate capacity will sustain oscillation at radio frequencies (§ 3-7) so that the circuit becomes an oscillator rather than an amplifier. Although special circuits can be used to overcome oscillation, it is preferable to use a tube in which such feedback is negligible. Such a tube can be made by inserting a second grid to act as an electrostatic shield between the control grid and plate and thus reduce the grid-plate capacity to a negligible value. The addition of the extra grid, called the *screen grid* or screen, makes the tube a *tetrode*, or four-element tube.

The tetrode — The screen grid increases the amplification factor and plate resistance of the tube to values much higher than are attainable in triodes of practicable construction, although the mutual conductance is about the same as that of an equivalent triode. The screen grid is ordinarily operated at a lower positive potential than the plate, and is bypassed back to the cathode so that it has essentially the same a.c. potential as the cathode.

Another type of tetrode, in which the electrostatic shielding provided by the second grid is purely incidental, is built for audio power output work. The second grid accelerates the flow of electrons from cathode to plate, and the structure has a higher power sensitivity (§ 3-3) than is possible with triodes.

Secondary emission — When an electron travelling at appreciable velocity through a tube strikes the plate it dislodges other electrons which "splash" from the plate into the interelement space. This phenomenon is called *secondary emission*. In the triode, ordinarily operated with the grid negative with respect to cathode, these secondary electrons are repelled back into the plate and cause no disturbance. In the screen-grid tube, however, the positively charged screen grid attracts the secondary electrons, causing a reverse current to flow between screen and plate. The effect is particularly marked when the plate and screen potentials are nearly equal, which may be the

case during part of the a.c. cycle when the instantaneous plate current is large and the plate voltage low (§ 3-3).

The pentode — To overcome the effects of secondary emission a third grid, called the *suppressor grid,* can be inserted between the screen and plate. This grid is connected directly to the cathode and repels the relatively low-velocity secondary electrons back to the plate without obstructing to any appreciable extent the regular plate-current flow. Larger undistorted outputs therefore

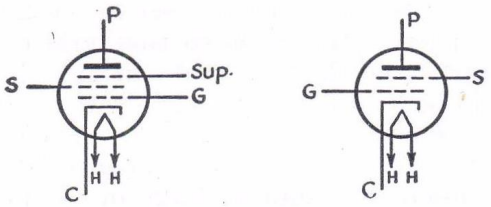

Fig. 308 — Symbols for pentode and tetrode tubes. H, heater; C, cathode; G, control grid; P, plate; S, screen grid; Sup., suppressor grid.

can be secured from the *pentode,* or five-element tube.

Pentode-type screen-grid tubes are used as radio-frequency voltage amplifiers, and in addition can be used as audio-frequency voltage amplifiers to give high voltage gain per stage. Pentode tubes also are suitable as audio-frequency power amplifiers, having greater plate efficiency and power sensitivity than triodes.

Beam tubes — A "beam" type tube is a tetrode incorporating a structure which forms the electrons travelling to the plate into concentrated paths, resulting in higher plate efficiency and power sensitivity. Suitable design also overcomes the effects of secondary emission without the necessity for a suppressor grid. Tubes constructed on the beam principle are used in receivers as both r.f. and audio amplifiers, and are built in larger sizes for transmitting circuits.

Variable-mu and sharp cut-off tubes — Receiving screen-grid tetrodes and pentodes for radio-frequency voltage amplification are made in two types, known as *sharp cut-off* and *variable-μ* or "super-control" types. In the sharp cut-off type the amplification factor is practically constant regardless of grid bias, while in the variable-μ type the amplification factor decreases as the negative bias is increased. The purpose of this design is to permit the tube to handle large signal voltages without distortion in circuits in which grid-bias control is used to vary the amplification.

Multipurpose types — A number of combination types of tubes have been constructed to perform multiple functions, particularly in receiver circuits. Among the simplest are full-wave rectifiers, combining two diodes in one envelope, and twin triodes, consisting of two triodes in one bulb for Class-B audio amplification. More complex types include duplex-diode triodes, duplex-diode pentodes, converters and mixers (for superheterodyne receivers), combination power tubes and rectifiers, and so on. In many cases the tube structure can be identified by the name, and all the types are basically the same as the simpler element combinations already described.

Mercury-vapor rectifiers — The power lost in a diode rectifier (§ 3-1) for a given plate current will be lessened if it is possible to decrease the plate-cathode voltage at which the current is obtained. If a small amount of mercury is put in the tube, the mercury will vaporize when the cathode is heated and, further, will ionize (§ 2-4) when plate voltage is applied. This neutralizes the space charge and reduces the plate-cathode voltage drop to a practically constant value of about 15 volts regardless of the value of plate current. Since this drop is much smaller than can be attained with purely thermionic conduction, there is less power loss in the rectifier. The constant voltage drop also is an advantage. Mercury-vapor tubes are widely used in power rectifiers.

Grid-control rectifiers — If a grid is inserted in a mercury-vapor rectifier it is found that with sufficient negative grid bias it is possible to prevent plate current from flowing if the bias is present before plate voltage is applied. However, if the bias is lowered to the point where plate current can flow, the mercury vapor will ionize and the grid loses control of plate current since the space charge is neutralized. It can assume control again only after the plate voltage is disconnected. The same phenomenon also occurs in triodes filled with other gases which ionize at low pressure. Grid-control rectifiers find considerable application in many circuits where "electronic switching" is desirable.

• 3-6 COMMON ELEMENTS IN VACUUM-TUBE CIRCUITS

Types of cathodes — Cathodes are of two types, directly and indirectly heated. Directly-heated cathodes or filaments used in receiving tubes are of the oxide-coated type, consisting of a wire or ribbon of tungsten coated with certain rare metals and earths which form an oxide capable of emitting large numbers of electrons with comparatively little cathode-heating power.

When directly-heated cathodes are operated on alternating current, the cyclic variation of current causes electrostatic and magnetic effects which vary the plate current of the tube at supply-frequency rate and thus produce

hum in the output. Hum from this source is eliminated by the indirectly-heated cathode, consisting of a thin metal sleeve or thimble, coated with electron-emitting material, enclosing a tungsten wire which acts as a heater. The heater brings the cathode thimble to the proper temperature to cause electron emission. This type of cathode is also known as the equipotential cathode, since all parts are at the same potential.

Methods of obtaining grid bias — Grid bias may be obtained from a source of voltage especially provided for that purpose, as a battery or other type of d.c. power supply. This is indicated in Fig. 309-A. A second method is shown at B, utilizing a *cathode resistor;* plate current flowing through the resistor causes a voltage drop which, with the connections shown, has the right polarity to bias the grid negatively with respect to the cathode. The value of the resistor is determined by the bias required and the plate current which flows at that value of bias, as found from the tube characteristic curves; with the voltage and current known, the resistance can be determined by Ohm's Law (§ 2-6):

$$R_c = \frac{E \times 1000}{I_c}$$

where R_c = cathode bias resistor in ohms
E = desired bias voltage
I_c = total d.c. cathode current in milliamperes.

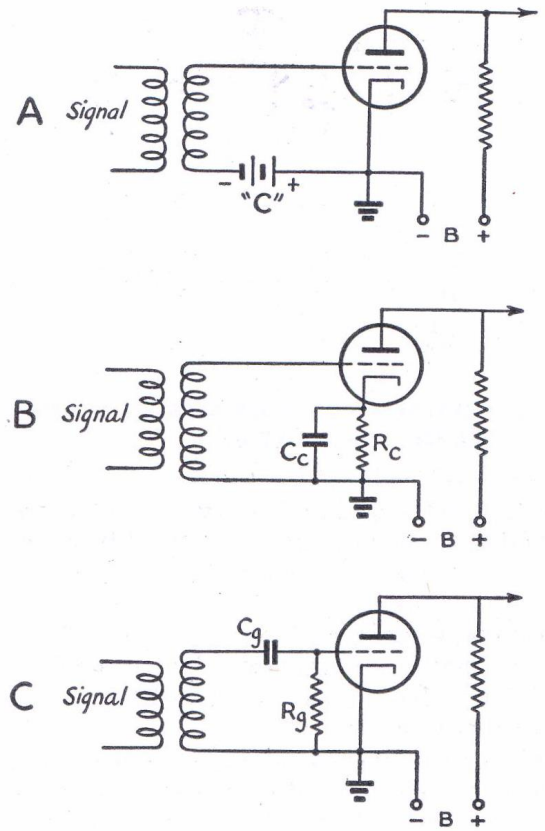

Fig. 309 — Methods of obtaining grid bias. A, fixed bias; B, cathode bias; C, grid-leak bias.

Screen- and suppressor-grid currents should be included with the plate current in multi-element tubes to obtain the total cathode current, and also the control-grid current if the control grid is driven positive during operation. The a.c. component of plate current flowing through the cathode resistor will cause a voltage drop which gives negative feedback into the grid circuit (§ 3-3) so to prevent this the resistor usually is by-passed (§ 2-13), C_c being the *cathode by-pass condenser.*

A third method is by use of a *grid leak,* R_g in Fig. 309-C. This requires that the exciting voltage be positive with respect to the cathode during part of the cycle so that grid current will flow. The flow of grid current through the grid leak causes a voltage drop across the resistor which gives the grid a negative bias. The time constant (§ 2-6) of the grid leak and grid condenser should be large in comparison to the time of one cycle of the exciting voltage so that the grid bias will be substantially constant and will not follow the variations in a.c. grid voltage. For grid-leak bias,

$$R_g = \frac{E \times 1000}{I_g}$$

where R_g = grid-leak resistance in ohms
E = desired bias voltage
I_g = d.c. grid current in milliamperes.

When two tubes are operated in push-pull or parallel and use a common cathode- or grid-leak resistor, the value of resistance becomes one-half what it would be for one tube.

Cathode circuits; filament center tap — When a filament-type cathode is heated by a.c. the hum introduced can be minimized by making the two ends of the filament have equal and opposite potentials with respect to a center point, usually grounded (§ 2-13), to which the grid and plate return circuits are connected. The filament transformer winding is frequently *center-tapped* for this purpose, as shown in Fig. 310-A. The same result can be secured with an untapped winding by substituting a center-tapped resistor of 10 to 50 ohms as at B. The by-pass condensers, C_1 and C_2, are used in radio-frequency circuits to avoid having the r.f. current flow through the transformer or resistor, either of which may have considerable reactance at radio frequencies.

The filament supply for tubes with indirectly-heated cathodes sometimes is center-tapped for the same purpose; although frequently one side of the filament supply, and hence one terminal of the tube heater, is simply grounded.

• 3-7 OSCILLATORS

Self-oscillation — If in an amplifier with positive feedback the feedback or regeneration

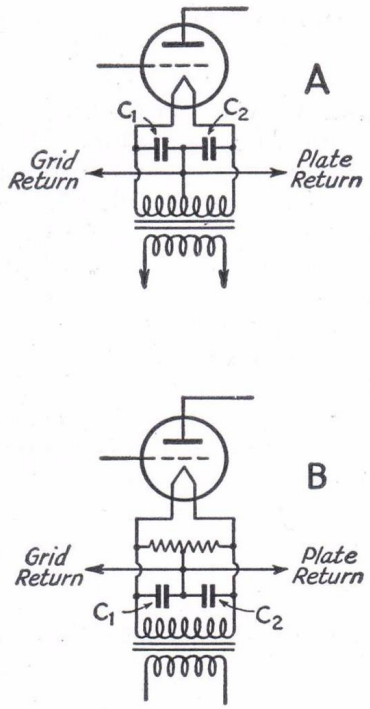

Fig. 310 — **Filament center-tap connections.**

(§ 3-3) is increased to a critical value, the tube will generate a continuous alternating current. This phenomenon, called *oscillation*, occurs when the power transferred between plate and grid circuits becomes large enough to overcome the circuit losses and the tube provides its own grid excitation. The power consumed is of course taken from the d.c. plate supply.

It is not necessary to apply external excitation to such a circuit, since any random variation in current, even though minute, will rapidly be amplified up to the proper value to cause oscillation. The frequency of oscillation will be that at which losses are least which, in the case of the resonant circuits usually associated with oscillators, is very nearly the resonant frequency of the circuit.

Magnetic feedback — One form of feedback is by electromagnetic coupling between plate (output) and grid (input) circuits. Two representative circuits of this type are shown in Fig. 311. That at A is called the *tickler* circuit. The amplified current flowing in the "tickler," L_2, induces a voltage in L_1 in the proper phase when the coils are connected as shown and wound in the same direction. The feedback can be adjusted by adjusting the coupling between L_1 and L_2.

The *Hartley* circuit, B, is similar in principle. There is only one coil, but it is divided so that part of it is in the plate circuit and part in the grid circuit. The magnetic coupling between the two sections of the coil provides the feedback, which can be adjusted by moving the tap on the coil.

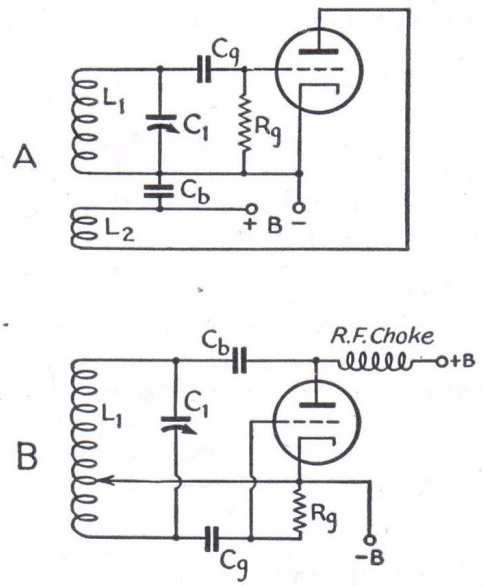

Fig. 311 — **Oscillator circuits with magnetic feedback. A, tickler circuit; B, Hartley circuit.**

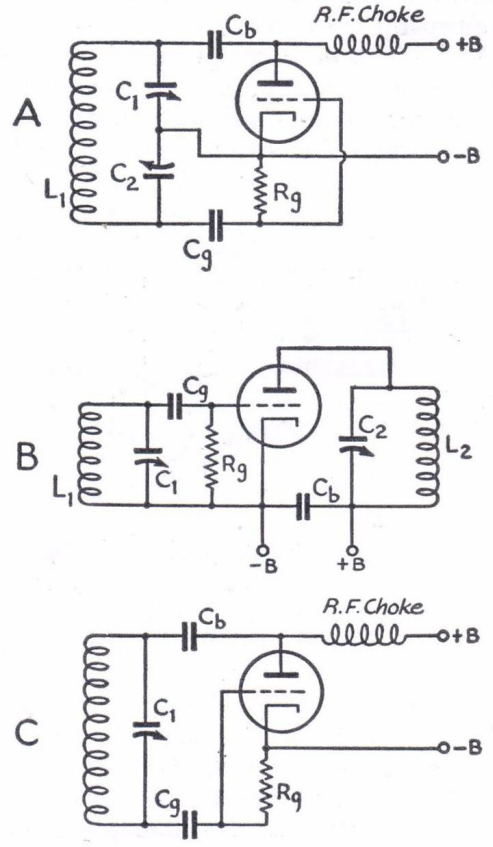

Fig. 312 — **Oscillator circuits with capacity feedback. A, Colpitts circuit; B, tuned-plate tuned-grid circuit; C, ultraudion circuit.**

Capacity feedback — The feedback can also be obtained through capacity coupling, as shown in Fig. 312. At A, the *Colpitts* circuit, the voltage across the resonant circuit is divided, by means of the series condensers, into two parts. The instantaneous voltages at the ends of the circuit are opposite in polarity with respect to the cathode, hence in the right phase to sustain oscillation.

CIVILIAN TRAINING LIBRARY

The tuned-grid tuned-plate circuit at B utilizes the grid-plate capacity of the tube to provide feedback coupling. There should be no magnetic coupling between the two tuned-circuit coils. Feedback can be adjusted by varying the tuning of either the grid or plate circuit. The circuit with the higher Q (§ 2-10) determines the frequency of oscillation, although the two circuits must be tuned approximately to the same frequency for oscillations to occur.

The *ultraudion* circuit at C is equivalent to the Colpitts, with the voltage division for oscillation brought about through the grid-to-filament and plate-to-filament capacities of the tube. In this and in the Colpitts circuit the feedback can be controlled by varying the ratio of the two capacities. In the ultraudion circuit this can be done by connecting a small variable condenser between grid and cathode.

Crystal oscillators — Since a properly-cut quartz crystal is equivalent to a high-Q tuned circuit (§ 2-10) it may be substituted for a conventional circuit in an oscillator to control the frequency of oscillation. A simple crystal oscillator circuit is shown in Fig. 313. It will be

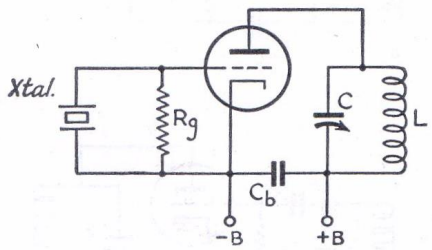

Fig. 313 — Simple crystal oscillator circuit.

recognized as the tuned-plate-tuned-grid circuit with the crystal substituted for the resonant circuit in the grid. Many variations of this fundamental circuit are used in practice.

Series and parallel feed — A circuit such as the tickler circuit of Fig. 311-A is said to be *series fed* because the source of plate voltage and the r.f. plate circuit (the tickler coil) are connected in series, hence the d.c. plate current flows through the coil to the plate. A by-pass (§ 2-13) condenser, C_b, must be connected across the plate supply to shunt the radio-frequency current around the source of power. Other examples of series plate feed are shown in Figs. 312-B and 313.

In some cases the source of plate power must be connected in parallel with the tuned circuit in order to provide a path for direct current to the plate. This is illustrated by the Hartley circuit of Fig. 311-B where it would be impossible to feed the plate current through the coil because there is a direct connection between the coil and cathode. Hence the voltage is applied to the plate through a radio-frequency choke which prevents the r.f. current from flowing to the plate supply and thus short-circuiting the oscillator. The blocking condenser C_b provides a low-impedance path for radio-frequency current flow but is an open circuit for direct current (§ 2-13). Other examples of parallel feed are shown in Figs. 312-A and 312-C.

Values of chokes, by-pass and blocking condensers are determined by the considerations outlined in § 2-13.

Excitation and bias — The excitation voltage required depends upon the characteristics of the tube and the losses in the circuit, including the power consumed in the load. In practically all oscillators the grid is driven positive during part of the cycle, so that power is consumed in the grid circuit (§ 3-2). This power must be supplied by the plate circuit. With insufficient excitation the tube will not oscillate; with too-high excitation the *grid losses*, or power consumed in the grid circuit, will be excessive.

Oscillators are almost always grid-leak biased (§ 3-6), which not only takes advantage of the grid-current flow but also gives better operation since the bias adjusts itself to the excitation voltage available.

Tank circuit — The resonant circuit associated with the oscillator is generally called the *tank circuit*. This name derives from the storage of energy associated with a resonant circuit of reasonably high Q (§ 2-10). It is applied to any resonant circuit in transmitting applications, whether used in an oscillator or amplifier.

Power output — The *power output* of an oscillator is the useful a.c. power consumed in a load connected to the oscillator. The load may be coupled by any of the means described in § 2-11.

Plate efficiency — The *plate efficiency* (§ 3-3) of an oscillator depends upon the load resistance, excitation, and other operating conditions, and usually is in the vicinity of 50%. It is not as high as in the case of an amplifier, since the oscillator must supply its own grid losses, which are usually 10% to 20% of the output power.

Frequency stability — The frequency stability of an oscillator is its ability to maintain constant frequency in the presence of variable operating conditions. The more important factors which may cause a change in frequency are (1) plate voltage, (2) temperature, (3) loading, (4) mechanical variations of circuit elements. Plate-voltage variations will cause a corresponding instantaneous shift in frequency; this type of frequency shift is called *dynamic* instability. Temperature changes will

cause tube elements to expand or contract slightly, thus causing variations in the interelectrode capacities (§ 3-2), and since these are unavoidably part of the tuned circuit the frequency will change correspondingly. Temperature changes in the coil or condenser will change the inductance and capacity slightly, again causing a shift in the resonant frequency. Both these temperature effects are relatively slow in operation, and the frequency change caused by them is called *drift*. Load variations act in much the same way as plate voltage variations except when there is a temperature change in the load, when drift also may be present. Mechanical variations, usually caused by vibration, cause changes in inductance and/or capacity which in turn cause the frequency to "wobble" in step with the vibration.

Dynamic instability can be reduced by using a tuned circuit of high effective Q which means, since the tube and load represent a relatively low resistance in parallel with the circuit, that a low L/C ratio ("high-C") must be used (§ 2-10), and that the circuit should be lightly loaded. Dynamic stability also can be improved by using a high value of grid leak, which gives high grid bias and raises the effective resistance of the tube as seen by the tank circuit, and by using relatively high plate voltage and low plate current, which accomplishes the same result. Drift can be minimized by using low d.c. input (for the size of tube), by using coils of large wire to prevent undue temperature rise, and by providing good ventilation to carry off heat rapidly. A low L/C ratio in the tank circuit also helps because the interelectrode capacity variations have proportionately less effect on the frequency when shunted by a large condenser. Special temperature-compensated components also can be used. Mechanical instability can be prevented by using well-designed components and insulating the oscillator from mechanical vibration.

Negative-resistance oscillators — If a resonant circuit were completely free from losses, a current once started would continue indefinitely; that is, sustained oscillations would occur. This condition can be simulated in practice by cancelling the actual resistance in the circuit by inserting an equal or greater amount of *negative resistance*. Negative resistance is exhibited by any device showing an increase of current when the applied voltage is decreased, or vice versa.

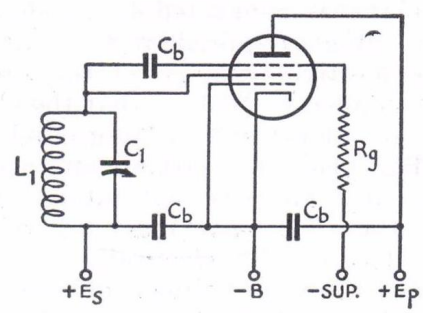

Fig. 314 — Negative-resistance oscillator. This circuit, known as the "transitron," requires that the screen be operated at a higher d.c. potential than the plate of the tube.

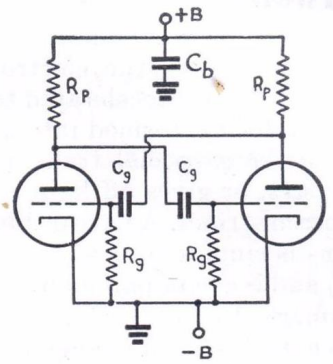

Fig. 315 — The multivibrator circuit, or relaxation oscillator.

The vacuum tube can be made to show negative resistance by a number of arrangements of electrode potentials. One circuit is shown in Fig. 314. Negative resistance is produced by virtue of the fact that as the suppressor grid of a pentode is given more negative bias, electrons normally passing through to the plate are turned back to the screen, thus increasing the screen current, and reversing normal tube action (§ 3-2). The negative resistance so produced is sufficiently low so that ordinary tuned circuits will oscillate readily at frequencies up to 15 Mc. or so.

The multivibrator — The type of oscillator circuit shown in Fig. 315 is known as the *multivibrator*, or *relaxation* oscillator. Two tubes are used with resistance coupling, the output of one tube being fed to the input circuit of the other. The frequency of oscillation is determined by the time constants (§ 2-6) of the resistance-capacity combinations. The principle of oscillation is the same as in the feedback circuits already described, the second tube being necessary to obtain the proper phase relationship (§ 3-3) for oscillation when the energy is fed back.

The multivibrator is a very unstable oscillator, and for this reason its frequency readily can be controlled by a small signal of steady frequency introduced into the circuit. This phenomenon is called *locking*. Its output waveshape is highly distorted, hence has high harmonic content (§ 2-7). A useful feature is that the multivibrator will lock with a frequency corresponding to one of its higher harmonics (the tenth harmonic is frequently used) and it can therefore be used as a *frequency divider*.

● 3-8 CATHODE-RAY TUBES

Principles — The cathode-ray tube is a vacuum tube in which the electrons emitted from a hot cathode are accelerated to give them considerable velocity, formed into a beam, and allowed to strike a special translucent screen which *fluoresces*, or gives off light at the point where the beam strikes. A narrow beam of moving electrons is similar to a wire carrying current (§ 2-4) and is accompanied by electrostatic and electromagnetic fields. Hence it can be deflected (have its direction changed) by application of external electrostatic or magnetic fields which exert a force on the beam in the same way as similar fields do on charged bodies or on wires carrying current (§ 2-3, 2-5). Since the beam consists only of moving electrons, its weight and inertia are negligibly small, hence it can be deflected easily and without any appreciable time lag. For this reason it can be made to follow instantly the variations in fields which are changing periodically at very high radio frequencies.

Electron gun — The electrode arrangement which forms the electrons into a beam is called the *electron gun*. In the simple tube structure shown in Fig. 316, the gun consists of the cathode, grid, and anodes Nos. 1 and 2. The intensity of the electron beam is regulated by the grid in the same way as in an ordinary tube (§ 3-2). Anode No. 1 is operated at a positive potential with respect to the cathode, thus accellerating the electrons which pass through the grid, and is provided with small apertures through which the electron stream passes and is concentrated into a narrow beam. This anode is also known as the *focusing electrode*. Anode No. 2 is operated at a high positive potential with respect to cathode and further increases the velocity of the electrons in the beam. The electron velocity and sharpness of the beam are determined by the relative voltages on the electrodes. In some tubes a second grid is inserted between the control grid and anode No. 1 to provide additional accelleration of the electrons.

Methods of deflection — The gun alone simply produces a small spot on the screen, but when the beam is deflected by either magnetic or electrostatic fields the spot moves across the screen in proportion to the force exerted. When the motion is sufficiently rapid, retentivity of vision makes the path of the moving spot (*trace*) appear to be a continuous line.

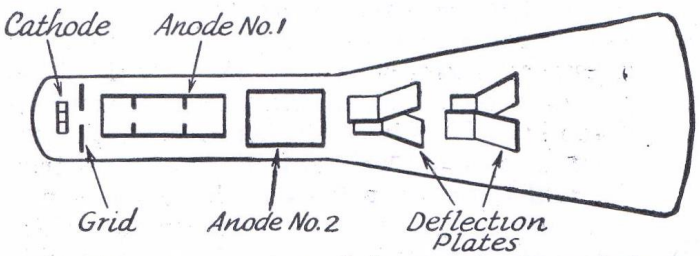

Fig. 316 — Arrangement of elements in the cathode-ray tube with electrostatic beam deflection.

Electrostatic deflection, generally used in the smaller tubes, is produced by *deflection plates*. Two sets of plates are placed at right angles to each other, as indicated in Fig. 316. The fields are created by applying suitable voltages between the two plates of each pair. Usually one plate of each pair is connected to anode No. 2 to establish the polarities (§ 2-3) of the fields with respect to the beam and to each other.

Tubes intended for magnetic deflection have the same type of gun, but have no deflection plates. Instead, the deflecting fields are set up by means of coils corresponding to the plates in tubes having electrostatic deflection. The coils are external to the tube but are mounted close to the glass envelope in the same relative positions occupied by the electrostatic deflection plates.

The beam deflection caused by a given change in the field intensity is called the *deflection sensitivity*. With electrostatic-deflection tubes it is usually expressed in millimeters per volt, which gives the linear movement of the spot on the screen as a function of the voltage applied to a set of deflecting plates. Values range from about 0.1 to 0.6 mm/volt, depending upon the tube construction and gun electrode voltages. The sensitivity is decreased by an increase in anode No. 2 voltage.

Fluorescent screens — The fluorescent screen materials used have varying characteristics according to the type of work for which the tube is intended. The spot color is usually green, white, yellow or blue, depending upon the screen material. The *persistence* of the screen is the time duration of the afterglow which exists when the excitation of the electron beam is removed. Screens are classified as long-, medium- and short-persistence. Small tubes for oscilloscope work are usually provided with medium-persistence screens having greenish fluorescence.

Tube circuits — A representative cathode-ray tube circuit with electrostatic deflection is shown in Fig. 317. One plate of each pair of deflecting plates is connected to anode No. 2. Since the voltages required are normally rather high, the positive terminal of the supply is usually grounded (§ 2-13) so that the common deflection plates will be at ground potential. This places the cathode and other elements at high potentials above ground, hence these elements must be well insulated. The various electrode voltages are obtained from a voltage divider (§ 2-6) across the high-voltage d.c. supply. R_3 is a variable divider or "potentiometer" for adjusting the negative bias on the control grid and thereby varying the beam cur-

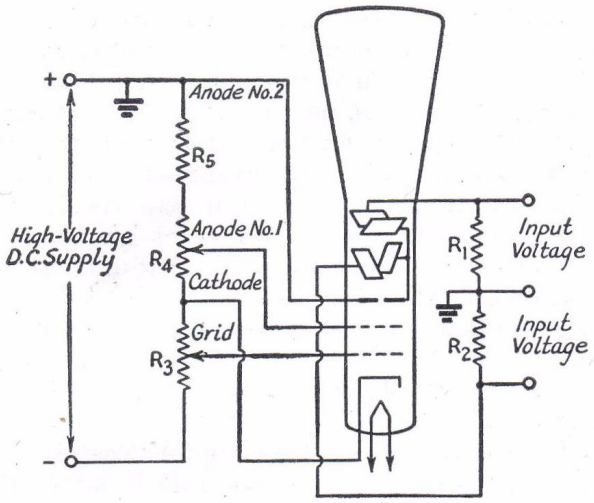

Fig. 317 — Cathode-ray tube circuit. Typical values for a three-inch (screen-diameter) tube such as the type 906:

R_1, R_2 — 1 to 10 megohms.
R_3 — 20,000-ohm potentiometer.
R_4 — 0.2-megohm potentiometer.
R_5 — 0.5 megohm.

The high-voltage supply should furnish about 1300 volts d.c.

rent; it is called the *intensity* or *brightness* control. The *focus*, or sharpness of the luminous spot formed on the screen by the beam, is controlled by R_4, which changes the ratio of anode No. 2 to anode No. 1 voltage. The focusing and intensity controls interlock to some extent, and the sharpest focus is obtained by keeping the beam current low.

Deflecting voltages for the plates are applied to the terminals marked "input voltage," R_1 and R_2 being high resistances (1 megohm or more) to drain off any accumulation of charge on the deflecting plates. Usually some provision is made to place an adjustable d.c. voltage on each set of plates so that the spot can be "centered" when stray electrostatic or magnetic fields are present; the adjustable voltage simply is set to neutralize such fields.

The tube is mounted so that one set of plates produces a horizontal line when a varying voltage is applied to it, while the other set of plates produces a vertical line under similar conditions. They are called, respectively, the "horizontal" and "vertical" plates, but which set of actual plates produces which line is simply a matter of how the tube is mounted. It is usually necessary to provide a mounting which can be rotated to some extent so that the lines will actually be horizontal and vertical.

Power supply — The d.c. voltage required for operation of the tube may vary from 500 volts for the miniature type (1-inch diameter screen) to several thousand for the larger tubes. The current, however, is very small, so that the power required is likewise small. Because of the small current requirements a rectified a.c. supply with half-wave rectification (§ 8-3) and a single 0.5 to 2-μfd. condenser as a filter (§ 8-5) is satisfactory.

• 3-9 THE OSCILLOSCOPE

Description — An oscilloscope is essentially a cathode-ray tube in the basic circuit of Fig. 317, but with provision for supplying a suitable deflection voltage on one set of plates, ordinarily those giving horizontal deflection. The deflection voltage is called the *sweep*. Oscilloscopes are frequently also equipped with vacuum-tube amplifiers for increasing the amplitude of small a.c. voltages to values suitable for application to the deflecting plates. These amplifiers are ordinarily limited to operation in the audio-frequency range, and hence cannot be used at radio frequencies.

Formation of patterns — When periodically-varying voltages are applied to the two sets of deflecting plates the path traced by the fluorescent spot forms a *pattern* which is stationary so long as the amplitude and phase relationships of the voltages remain unchanged. Fig. 318 shows how such patterns are formed. The horizontal sweep voltage is assumed to have the "sawtooth" waveshape indicated; with no voltage applied to the vertical plates, the trace would simply sweep from left to right across the screen along the horizontal axis X–X′ until the instant H is reached, when it reverses direction and returns to the starting point. The sine-wave voltage applied to the vertical plates would similarly trace a line along the axis Y–Y′ in the absence of any deflecting voltage on the horizontal plates. How-

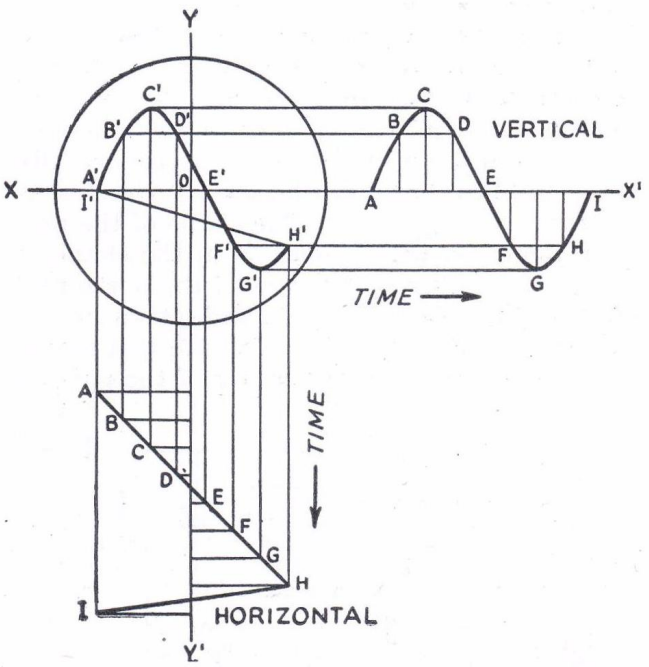

Fig. 318 — Showing the formation of the pattern from the horizontal and vertical sweep voltages.

ever, when both voltages are present the position of the spot at any instant depends upon the voltages on both sets of plates at that instant. Thus at time B the horizontal voltage has moved the spot a short distance to the right and the vertical voltage has similarly moved it upward, so that it reaches the actual position B′ on the screen. The resulting trace is easily followed from the other indicated positions, which are taken at equal time intervals.

Types of sweeps — A horizontal sweep-voltage waveshape such as that shown in Fig. 318 is called a *linear sweep,* because the deflection in the horizontal direction is directly proportional to time. If the sweep were perfect, the "fly-back" time, or time taken for the spot to return from the end (H) to the beginning (I or A) of the horizontal trace would be zero, so that the line HI would be perpendicular to the axis Y–Y′. Although the fly-back time cannot be made zero in practicable sweep-voltage generators, it can be made quite small in comparison to the time of the desired trace AH, at least at most frequencies within the audio range. The fly-back time is somewhat exaggerated in Fig. 318 to show its effect on the pattern. The line H′I′ is called the *return trace;* with a linear sweep it is less brilliant than the pattern because the spot is moving much more rapidly during the fly-back time than during the time of the main trace. If the fly-back time is short enough the return trace will be invisible.

The linear sweep has the advantage that it shows the shape of the wave applied to the vertical plates in the same way in which it is usually represented graphically (§ 2-7). By making the sweep time equal to a multiple of the time of one cycle of the a.c. voltage applied to the vertical plates, several cycles of the vertical or signal voltage will appear in the pattern. The shape of only the last cycle to appear will be affected by the fly-back in such a case. Although the linear sweep is generally most useful, other waveshapes may be desirable for certain purposes. The shape of the pattern obviously will depend upon the shape of the horizontal sweep voltage. If the horizontal sweep is sinusoidal, the main and return sweeps each occupy the same time, and the spot moves faster horizontally in the center of the pattern than it does at the ends. If two sinusoidal voltages of the same frequency are applied to both sets of plates, the resulting pattern may be a straight line, an ellipse or a circle, depending upon the amplitude and phase relationships. If the frequencies are harmonically related (§ 2-7) a stationary pattern will result, but if one frequency is not an exact harmonic of the other the pattern will show continuous motion. This is also the case when a linear sweep circuit is used; the sweep frequency and the frequency under observation must be harmonically related or the pattern will not be stationary.

Sweep circuits — A sinusoidal sweep is easiest to obtain, since it is possible to apply a.c. voltage from the power line directly or through a suitable transformer to the horizontal plates. A variable voltage divider can be used to regulate the width of the horizontal trace.

A typical circuit for a linear sweep is shown in Fig. 319. The tube is a *gas triode* or grid-control rectifier (§ 3-5). The breakdown voltage, or plate voltage at which the tube ionizes and starts conducting, is determined by the grid bias. When plate voltage is applied, the voltage across C_1 rises, as it acquires a charge through R_1, until the breakdown voltage is reached, when the condenser discharges rapidly through the comparatively low plate-cathode resistance of the tube. When the voltage drops to a value too low to maintain plate-current flow, the ionization is extinguished and C_1 once more charges through R_1. If R_1 is large enough, the voltage across C_1 rises linearly with time up to the breakdown point. This voltage is used for the sweep, being coupled to the cathode-ray tube or to an amplifier through C_2. The fly-back is the time required for discharge through the tube, and to keep it small the resistance during discharge must be as low as possible.

To obtain a stationary pattern, the "sawtooth" frequency can be controlled by varying C_1 and R_1, and by introducing some of the voltage to be observed (on the vertical plates) into the grid circuit of the tube. This voltage "triggers" the tube into operation in synchronism with the signal frequency. Synchronizing will occur even though the signal frequency is a multiple of the sweep frequency,

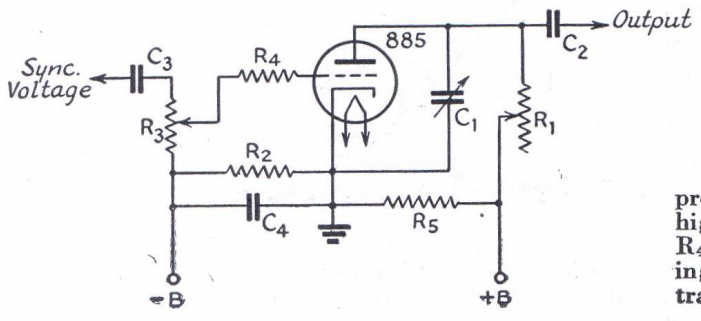

Fig. 319 — A linear sweep-oscillator circuit.
C_1 — 0.001 to 0.25 μfd.
C_2 — 0.5 μfd. C_3 — 0.1 μfd.
C_4 — 25 μfd., 25-volt electrolytic.
R_1 — 0.3 to 1.5 megohms.
R_2 — 2000 ohms. R_4 — 25,000 ohms.
R_3 — 0.25 megohm. R_5 — 0.1 megohm.
"B" supply should deliver 300 volts. C_1 and R_1 are proportioned to give suitable sweep frequency; the higher the time constant (§ 2-6) the lower the frequency. R_4 is a protective resistor to limit grid-current flow during the deionizing period, when positive ions are attracted to the negative grid.

provided the circuit constants and the amplitude of the synchronizing voltage are properly adjusted.

The voltage output of the type of circuit shown in Fig. 319 is limited because the charging rate of the condenser is linear only on that portion of the logarithmic charging curve (§ 2-6) which is practically a straight line. A linear charging rate over a longer period of time can be secured by substituting a current-limiting device, such as a properly-adjusted vacuum tube, for R_1.

Amplifiers — The usefulness of the oscilloscope is enhanced by providing amplifiers for both the horizontal and vertical sweep voltages, thereby insuring that sufficient voltage will be available at the deflection plates to give a pattern of suitable size. With small oscilloscope tubes (3-inch and smaller screens) the voltage required for a deflection of one inch varies from about 30 to 100 volts, depending upon the anode voltages, so that an amplifier tube capable of an undistorted peak output voltage of 100 or so is necessary. (With such an amplifier the voltage difference, or total voltage "swing", between the positive and negative peaks is 200 volts.) A resistance-coupled voltage amplifier (§ 3-3) having a pentode tube is ordinarily used because of the high stage gain obtainable, and the amplifier should be designed to have good frequency response over as wide a range of audio frequencies as possible (§ 5-9). Since a voltage gain of 100 to 150 or more is readily obtainable, full deflection of the beam can be secured with an input of one volt or less with such an amplifier.

Constructional considerations — An oscilloscope should be housed in a metal cabinet, both to shield the tube from stray electromagnetic and electrostatic fields which might deflect the beam, and also to protect the operator from the high voltages associated with the tube. It is good practice to provide an interlock switch which automatically disconnects the high-voltage supply when the cabinet is opened for servicing or other reasons.

CHAPTER FOUR

Radio-Frequency Power Generation

4-1 TRANSMITTER REQUIREMENTS

General Requirements — The power output of a transmitter must be as stable in frequency and as free from spurious radiations as the state of the art permits. The steady r.f. output, called the *carrier* (§ 5-1), must be free from amplitude variations attributable to ripple from the plate power supply (§ 8-4) or other causes, its frequency should be unaffected by variations in supply voltages or inadvertent changes in circuit constants, and there should be no radiations on other than the intended frequency. The degree to which these requirements can be met depends upon the operating frequency.

Design principles — The design of the transmitter depends on the output frequency, the required power output, and the type of operation (c.w. telegraphy or 'phone). For c.w. operation at low power on medium-high frequencies (up to 7 Mc. or so) a simple crystal oscillator circuit can meet the requirements satisfactorily. However, the stable power output which can be taken from an oscillator is limited, so that for higher power the oscillator is used simply as a frequency-controlling element, the power being raised to the desired level by means of amplifiers. The requisite frequency stability can be obtained only when the oscillator is operated on relatively low frequencies, so that for output frequencies up to about 60 Mc. it is necessary to increase the oscillator frequency by multiplication (harmonic generation — § 3-3), which is usually done at fairly low power levels and before the final amplification. An amplifier which delivers power on the frequency applied to its grid circuit is known as a *straight amplifier;* one which gives harmonic output is known as a *frequency multiplier*. An amplifier used principally to isolate the frequency-controlling oscillator from the effects of changes in load or other variations in following amplifier stages is called a *buffer amplifier*. A complete transmitter therefore may consist of an oscillator followed by one or more buffer amplifiers, frequency multipliers, and straight amplifiers, the number being determined by the output frequency and power in relation to the oscillator frequency and power. The last amplifier is called the *final amplifier*, and the stages up to the last comprise the *exciter*. Transmitters are usually designed to work in a number of frequency bands, so that means for changing the frequency of resonant circuits in harmonic steps usually is provided, generally by means of plug-in inductances.

The general method of designing a transmitter is to decide upon the power output and the highest output frequency required, and also the number of bands in which the transmitter is to operate. The latter usually will determine the oscillator frequency, since it is general practice to set the oscillator on the lowest frequency band to be used. The oscillator frequency is seldom higher than 7 Mc. except in some portable installations where tubes and power must be conserved. A suitable tube (or pair of tubes) should be selected for the final amplifier and the grid driving power required determined from the tube manufacturer's data. This sets the power required from the preceding stage. From this point the same process is followed back to the oscillator, including frequency multiplication wherever necessary. The selection of a suitable tube complement requires knowledge of the operating characteristics of the various types of amplifiers and oscillators. These are discussed in the following sections.

At 112 Mc. and above the ordinary methods of transmitter design become rather cumbersome, although it is possible to use them with proper choice of tubes and other components. However, in this ultra-high-frequency (§ 2-7) region the requirements imposed are less severe, since the limited transmission range (§ 9-5) mitigates the interference conditions that determine the requirements on the long-distance lower frequencies. Hence simple oscillator transmitters are widely used.

Vacuum tubes — The type of tube used in the transmitter has an important effect on the circuit design. Tubes of high power sensitivity (§ 3-3) such as pentodes and beam tetrodes, give larger power amplification ratios per stage than do triodes, hence fewer tubes and stages may be used to obtain the same output power. On the other hand, triodes have certain operating advantages such as simpler power supply circuits and relatively simpler adjustment for modulation (§ 5-3), and in addition are considerably less expensive for the same power output rating. Consequently it is usually more

economical to use triodes as output amplifiers even though an extra low-power amplifier stage may be necessary.

At frequencies in the region of 56 Mc. and above it is necessary to select tubes designed particularly for operation at ultra-high frequencies, since tubes built primarily for the lower frequencies may work poorly or not at all.

• 4-2 SELF-CONTROLLED OSCILLATORS

Advantages and disadvantages — The chief advantage of a self-controlled oscillator is that the frequency of oscillation is determined by the constants of the tuned circuit, and hence readily can be set to any desired value. However, extreme care in design and adjustment are essential to secure satisfactory frequency stability (§ 3-7). Since frequency stability is generally poorer as the load on the oscillator is increased, the self-controlled oscillator should be used purely to control frequency and not for the purpose of obtaining appreciable power output, in transmitters intended for working below 60 Mc.

Oscillator circuits — The inherent stability of all of the oscillator circuits described in § 3-7 is about the same, since stability is more a function of choice of proper circuit values and adjustment than of the method by which feedback is obtained. However, some circuits are more convenient to use than others, particularly from the standpoint of feedback adjustment, mechanical considerations (whether the tuning condenser rotor plates can be grounded or not, etc.), and uniform output over a considerable frequency range. All simple circuits suffer from the fact that the power output must be taken from the frequency-determining tank circuit, so that aside from the effect of loading on frequency stability, the following amplifier stage also can react on the oscillator in such a way as to change the frequency.

The electron-coupled oscillator — The effects of loading and coupling to the next stage can be greatly reduced by use of the *electron-coupled* circuit, in which a screen-grid tube (§ 3-5) is so connected that its screen grid is used as a plate, in connection with the control grid and cathode, in an ordinary triode oscillator circuit. The screen is operated at ground r. f. potential (§ 2-13) to act as a shield between the actual plate and the cathode and control grid; the latter two elements must therefore be above ground potential. The output is taken from the plate circuit. Under these conditions the capacity coupling (§ 2-11) between the plate and other ungrounded tube elements is quite small, hence the output power is secured almost entirely by variations

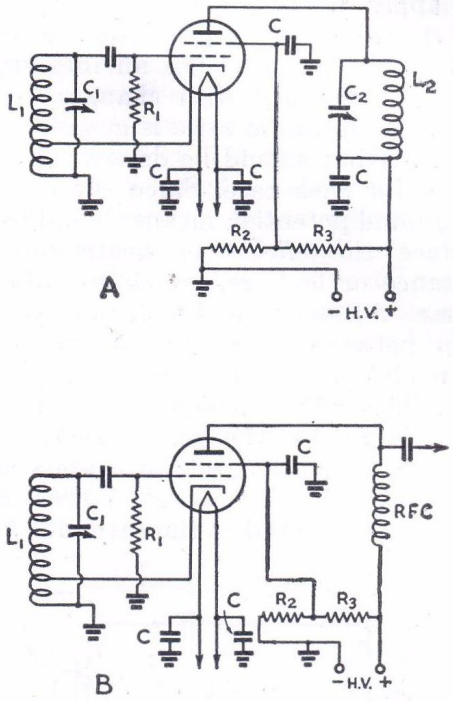

Fig. 401 — Electron-coupled oscillator circuit. For maximum stability the grid leak, R_1, should be 100,000 ohms or more. The grid condenser should be of the order of 100 $\mu\mu$fd., other fixed condensers from 0.002 μfd. to 0.1 μfd. Proper values for R_2 and R_3 may be determined from § 8-10. For maximum isolation between oscillator and output circuits, the tube should have extremely low grid-plate capacity.

in the plate current caused by the varying potentials on the grid and cathode. Since in a screen-grid tube the plate voltage has a relatively small effect on the plate current, the reaction on the oscillator frequency for different conditions of loading is small.

It is generally most convenient to use a Hartley (§ 3-7) circuit in the frequency-determining part of the oscillator. This is shown in Fig. 401, where L_1C_1 is the oscillator tank circuit. The screen is grounded for r.f. through a by-pass condenser (§ 2-13) but has the usual d.c. potential. The cathode connection is made to a tap on the tank coil to provide feedback. In the plate circuit a resonant circuit, L_2C_2, can be connected as shown at A; it may be tuned either to the oscillation frequency or to one of its harmonics. Untuned output coupling is shown at B; with this method the output voltage and power are considerably lower than with a tuned plate circuit, but better isolation between oscillator and amplifier is secured.

If the oscillator tube is a pentode with an external suppressor connection the suppressor grid should be grounded, not connected to cathode. This provides additional internal shielding and further isolates the plate from the frequency-determining circuit.

Factors influencing stability — The causes of frequency instability and the necessary remedial steps have been discussed in § 3-7.

These apply to all oscillators. In addition, in the electron-coupled oscillator the ratio of plate to screen voltage has an important effect on the stability with changes in supply voltage; the optimum ratio is generally of the order of 3:1 but should be determined experimentally for each case. Since the cathode is above ground potential, means should be taken to reduce the effects of heater-to-cathode capacitance or leakage, which by allowing a small a.c. voltage from the heater supply to develop between cathode and ground may cause modulation (§ 4-1) at the supply frequency. This effect, which is usually appreciable only at 14 Mc. and higher, may be reduced by by-passing of the heaters as indicated in Fig. 401 or by operating the heater at the same r.f. potential as the cathode. The latter may be accomplished by the wiring arrangement shown in Fig. 402.

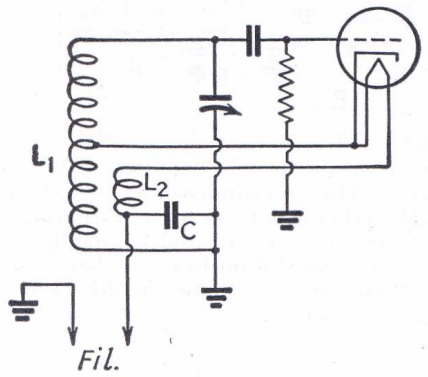

Fig. 402 — Method of operating the heater at cathode r.f. potential in an electron-coupled oscillator. L_2 should have the same number of turns as the part of L_1 between ground and the cathode tap, and should be closely coupled to L_1 (preferably interwound). By-pass condenser C should be 0.01 to 0.1 μfd.

Tank circuit Q — The most important single factor in determining frequency stability is the *Q* of the oscillator tank circuit. The effective *Q* must be as high as possible for best stability. Since oscillation is accompanied by grid-current flow, the grid-cathode circuit constitutes a resistance of load of appreciable proportions, the effective resistance being low enough to be the determining factor in establishing the effective parallel impedance of the tank circuit. Consequently, if the ends of the tank are connected to plate and grid, as is usual, a high effective *Q* can be obtained only by decreasing the *L/C* ratio and making the inherent resistance in the tank as low as possible. The tank resistance can be decreased by using low-loss insulation on condensers and coils, and by winding the coil with large wire. With ordinary construction the optimum tank capacity is of the order of 500 to 1000 μμfd. at a frequency of 3.5 Mc.

The effective circuit *Q* can be raised by increasing the resistance of the grid circuit and thus decreasing the loading. This can be accomplished by reducing the oscillator grid current, by using minimum feedback to maintain stable oscillation and by using a high value of grid-leak resistance.

A high-*Q* tank circuit can also be obtained with a higher *L/C* ratio by "tapping down" the tube connections on the tank (§ 2-10). This is advantageous in that a coil with higher inherent *Q* can be used; also, the circulating r.f. current in the tank circuit is reduced so that drift from coil heating is decreased. However, the circuit is complicated to some extent and the taps may cause parasitic oscillations to be set up (§ 4-10).

Plate supply — Since the oscillator frequency will be affected to some extent by changes in plate supply voltage, it is necessary that the latter be free from ripple (§ 8-4) which would cause frequency variations at the ripple-frequency rate (*frequency modulation*). It is also advantageous to use a voltage-stabilized power supply (§ 8-8). Since the oscillator is usually operated at low voltage and current, gaseous regulator tubes are quite suitable.

Power level — The self-controlled oscillator should be designed purely for frequency control and not to give appreciable power output, hence small tubes of the receiving type may be used. The power input is ordinarily not more than a watt or two, subsequent buffer amplifiers being used to increase the power to the desired level. The use of receiving tubes is advantageous mechanically, since the small elements are less susceptible to vibration and are usually securely braced to the envelope.

Oscillator adjustment — The adjustment of an oscillator consists principally in observing the design principles outlined in the preceding paragraphs. Frequency stability should be checked with the aid of a stable receiver, or an auxiliary crystal oscillator may be used as a standard for checking dynamic stability and drift, the self-controlled oscillator being adjusted to approximately the same frequency so that an audio-frequency beat (§ 2-13) can be obtained. If it is possible to vary the oscillator plate voltage (an adjustable resistor of 50,000 or 100,000 ohms in series with the plate supply lead will give considerable variation) the change in frequency with change in plate voltage may be observed and the operating conditions varied until minimum frequency shift results. The principal factors affecting dynamic stability will be the tank circuit *L/C* ratio, the grid-leak resistance, and the amount of feedback. In the electron-coupled circuit the latter may be adjusted by changing the position of the cathode tap on the tank coil; this adjustment is quite important in its effect on the frequency stability.

Drift may be checked by allowing the oscillator to operate continuously from a cold start, the frequency change being observed at regular intervals. Drift may be minimized by using less than the rated power input to the plate of the tube, by construction which prevents tube heat from reaching the tank circuit elements, and by use of large wire in the tank coil to reduce temperature rise from internal heating.

In the electron-coupled oscillator having a tuned plate circuit (Fig. 401-A) resonance at the fundamental and harmonic frequencies of the oscillator portion of the tube will be indicated by a dip in plate current as the plate tank condenser is varied. This dip should be rather marked at the fundamental, but will be less so on harmonic frequencies.

• 4-3 PIEZO-ELECTRIC CRYSTALS

Characteristics — Piezo-electric crystals (§ 2-10) are universally used for controlling the frequency of transmitting oscillators because the extremely high Q of the crystal and the necessarily loose coupling between it and the oscillator tube make the frequency stability of a crystal-controlled oscillator very high. Active plates may be cut from a raw crystal at various angles to its electrical, mechanical and optical axes, resulting in differing characteristics as to thickness, frequency-temperature coefficient, power-handling capabilities, etc. The commonly used cuts are designated as X, Y, AT, V, and LD.

The ability to adhere closely to a known frequency is the outstanding characteristic of a crystal oscillator. This is also its disadvantage, in that the oscillator frequency can be changed appreciably only by using a number of crystals.

Frequency-thickness ratio — Crystals used for transmitting purposes are so cut that the thickness of the crystal is the frequency-determining factor, the length and width of the plate being of relatively minor importance. For a given crystal cut, the ratio between thickness and frequency is a constant; that is,

$$F = \frac{k}{t}$$

where F is the frequency in megacycles and t is the thickness of the crystal in thousandths of an inch. For the X-cut, $k = 112.6$; for the Y-cut, $k = 77.0$; for the AT-cut, $k = 66.2$.

At frequencies above the 7-Mc. region the crystal becomes very thin and correspondingly fragile, so that crystals are seldom manufactured for operation much above this frequency. Direct crystal control on 14 and 28 Mc. is secured by use of "harmonic" crystals, which are ground to be active oscillators when excited at the third harmonic of the frequency represented by their thickness.

Temperature coefficient of frequency — The resonant frequency of a crystal will vary with its temperature, to an extent depending upon the type of cut. The frequency-temperature coefficient is usually expressed in cycles frequency change per megacycle, per degree Centigrade temperature change, and may be either positive (increasing frequency with increasing temperature) or negative (decreasing frequency with increasing temperature). X-cut crystals have a negative coefficient of 15 to 25 cycles/megacycle/degree C. The coefficient of Y-cut crystals may vary from − 20 cycles/megacycle/degree C. to + 100 cycles/megacycle/degree C. The AT, V and LD cuts have very low coefficients. Y-cut crystals frequently "jump" to another frequency when the temperature is changed rather than gradually changing frequency as the nominal coefficient might indicate, and hence are rather unreliable under temperature variations.

The temperature of a crystal depends not only on the temperature of its surroundings but also on the power it must dissipate while oscillating, since power dissipation causes heating (§ 2-6, 2-8). Consequently the crystal temperature may be considerably above that of the surrounding air when the oscillator is in operation. To minimize heating and frequency drift (§ 3-7) the power used in the crystal must be kept to a minimum.

Power limitations — If the crystal is made to oscillate too strongly, as when it is used in an oscillator circuit with high plate voltage and excessive feedback, the amplitude of the mechanical vibration will become great enough to crack or puncture the quartz. An indication of the vibration amplitude can be obtained by connecting an r.f. current indicating device of suitable range in series with the crystal. Safe r.f. crystal currents range from 50 to 200 milliamperes, depending upon the type of cut. A flashlight bulb or dial light of equivalent current rating makes a good current indicator. By choosing a bulb of lower rating than the current specified by the manufacturer as safe for the particular type of crystal used, the bulb will serve as a fuse, burning out before a current dangerous to the crystal is reached. The 60-ma. and 100-ma. bulbs are frequently used for this purpose. High crystal current is accompanied by increased power dissipation and heating, so that the frequency change also is greatest when the crystal is overloaded.

Crystal mountings — To make use of the crystal, it must be mounted between two metal electrodes. There are two types of mountings, one having a small air-gap between the top plate and the crystal and the other maintaining both plates in contact with the crystal. It is es-

sential that the surfaces of the metal plates in contact with the crystal be perfectly flat. In the air-gap type of holder, the frequency of oscillation depends to some extent upon the size of the gap. This property can be used to advantage with most low-drift crystals so that by using a holder having a top plate with closely adjustable spacing a controllable frequency variation can be obtained. A 3.5-Mc. crystal will oscillate without very great variation in power output over a range of about 5 kc. X- and Y-cut crystals are not generally suitable for this type of operation because they have a tendency to "jump" in frequency with different air gaps.

A holder having a heavy metal bottom plate with a large surface exposed to the air is advantageous in radiating quickly the heat generated in the crystal and thereby reducing temperature effects. Different plate sizes, pressures, etc., will cause slight changes in frequency, so that if a crystal is being ground to an exact frequency it should be tested in the holder and with the same oscillator circuit with which it will be used in the transmitter.

• 4-4 CRYSTAL OSCILLATORS

Triode oscillators — The triode crystal oscillator circuit (§ 3-7) is shown in Fig. 403. The limit of plate voltage that can be used without endangering the crystal is about 250 volts. With the r.f. crystal current limited to a safe value of about 100 ma., the power output obtainable is about 5 watts. The oscillation frequency is dependent to some extent on the plate tank tuning because of the change in input capacity with changes in effective amplification (§ 3-3).

Tetrode and pentode oscillators — Since the power output of a crystal oscillator is limited by the permissible r.f. crystal current (§ 4-3), it is advantageous to use an oscillator tube of high power sensitivity (§ 3-3), such as a pentode or beam tetrode (§ 3-5). Thus for a given crystal voltage or current more power output may be obtained than with the triode oscillator, or for a given output the crystal voltage will be lower, thereby reducing crystal heating. In addition, tank circuit tuning and loading react less on the crystal frequency because of the lower grid-plate capacity (§ 3-3).

Fig. 404 shows a typical pentode or tetrode oscillator circuit. The pentode and tetrode tubes designed for audio power work are excellent crystal-oscillator tubes. The screen voltage is generally of the order of half the plate voltage for optimum operation. Small tubes rated at 250 volts for audio work may be operated with 300 volts on the plate and 100–125 on the screen as crystal oscillators. The screen is at ground potential for r.f. and has no part in the operation of the circuit other than to set the operating characteristics of the tube. The larger beam tubes may be operated at 400 to 500 volts on the plate and 250 on the screen for maximum output.

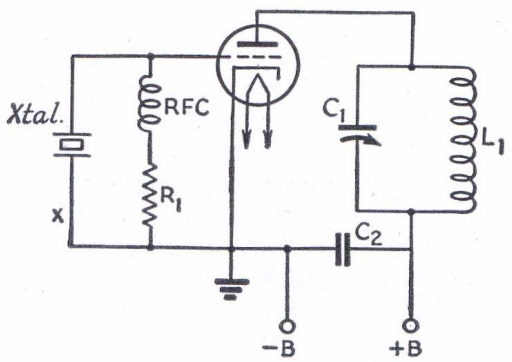

Fig. 403 — Triode crystal oscillator. The tank condenser C_1 may be a 100-$\mu\mu$fd. variable, with L_1 proportioned so that the tank will tune to the crystal frequency. C_2 should be 0.001 μfd. or larger. The grid leak, R_1, will vary with the type of tube; high-μ types take lower values, 2500 to 10,000 ohms, while medium and low-μ types take values of 10,000 to 25,000 ohms. Flashlight bulb or r.f. milliammeter (§ 4-3) may be inserted at X.

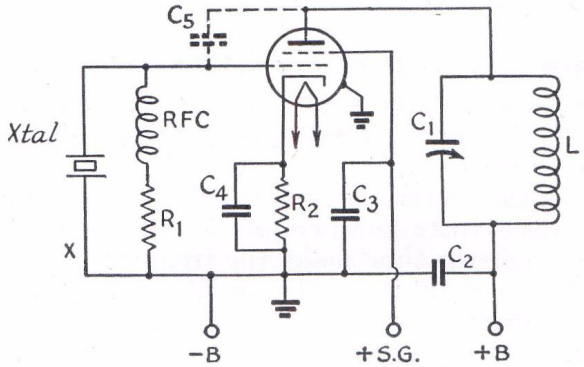

Fig. 404 — Tetrode or pentode crystal oscillator. Typical values: C_1, 100 $\mu\mu$fd. with L wound to suit frequency; C_2, C_3, 0.001 μfd. or larger; C_4, 0.01 μfd.; R_1, 10,000 to 50,000 ohms, best value being determined by trial for the plate voltage and operating conditions chosen; R_2, 250 to 400 ohms. R_2 and C_4 may be omitted, connecting cathode directly to ground, if plate voltage is limited to 250 volts. C_5 (if needed) may be formed by two metal plates about ½ inch square spaced about ¼ inch. If the tube has a suppressor grid, it should be grounded. X indicates point where flashlight bulb may be inserted (§ 4-3).

Pentode oscillators operating at 250 to 300 volts will give 4 or 5 watts output under normal conditions. The beam types 6L6 and 807 will give 15 watts or more at maximum plate voltage.

The grid-plate capacity may be too low to give sufficient feedback, particularly at the lower frequencies, in which case a feedback condenser, C_5, may be required. Its capacity should be the lowest value which will give stable oscillation.

Circuit constants — Typical values for grid-leak resistance and by-pass condenser values are given in Figs. 403 and 404. Since the

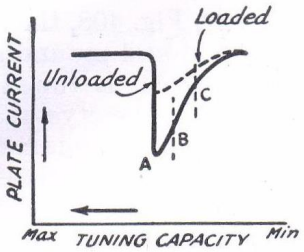

Fig. 405 — D.c. plate current vs. plate tuning capacity with the triode, tetrode or pentode crystal oscillator.

crystal is the frequency-determining element, the Q of the plate tank circuit has a relatively minor effect on the oscillator frequency. A Q of 12 (§ 4-8) is satisfactory for average conditions, but departure from this figure will not greatly affect the performance of the oscillator.

Adjustment of crystal oscillators — The tuning characteristics and procedure to be followed in tuning are essentially the same for triode, tetrode or pentode crystal oscillators. Using a plate milliammeter as an indicator of oscillation (a 0–100 ma. d.c. meter will have ample range for all low-power oscillators), the plate current will be found to be steady when the circuit is in the non-oscillating state, but will dip when the plate condenser is tuned through resonance at the crystal frequency. Fig. 405 is typical of the behavior of plate current as the tank condenser capacity is varied. An r.f. indicator, such as a small neon bulb touched to the plate end of the tank coil, will show maximum at point *A*. However, when the oscillator is delivering power to a load it is best to operate in the region *B-C*, since the oscillator will be more stable and there is less likelihood that a slight change in loading will throw the circuit out of oscillation, which is likely to happen when operation is too near the critical point, *A*. The crystal current is lower in the *B-C* region.

When power is taken from the oscillator, the dip in plate current is less pronounced, as indicated by the dotted curve. The greater the power output the smaller the dip in plate current. If the load is made too great, oscillations will not start. Loading is adjusted by varying the coupling to the load circuit (§ 2-11).

The greater the loading, the smaller the voltage fed back to the grid circuit for excitation purposes. This means that the r.f. voltage across the crystal also will be reduced, hence there is less crystal heating when the oscillator is delivering power than when operating unloaded.

Failure of a crystal circuit to oscillate may be caused by any of the following:

1. Dirty, chipped or fractured crystal
2. Imperfect or unclean holder surfaces
3. Too tight coupling to load
4. Plate tank circuit not tuning correctly
5. Insufficient feedback capacity

Pierce oscillator — This circuit is shown in Fig. 406. It is equivalent to the ultraudion circuit (§ 3-7) with the crystal replacing the tuned circuit. The output of the Pierce oscillator is relatively small, although it has the advantage that no tuning controls are required. The circuit requires capacitive coupling to a following stage. The amount of feedback is determined by the condenser C_2. To sustain oscillation the net reactance (§ 2-8) of the plate-cathode circuit must be capacitive; this condition is met so long as the inductance of the r.f. choke, together with the inductance of any coils associated with the input circuit

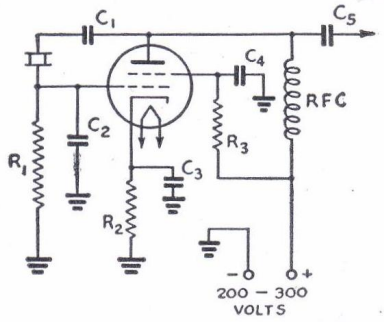

Fig. 406 — Pierce oscillator circuit. Tubes such as the 6C5 and 6F6 are suitable, operating at plate voltages not exceeding 300 to prevent crystal fracture. When a triode is used, R_3 and C_4 are omitted. R_1 should be 25,000 to 50,000 ohms. 1000 ohms is recommended for R_2. R_3 is the screen voltage dropping resistance (75,000 ohms for the 6F6). C_1 may have any value between 0.001 and 0.01 μfd. C_3 and C_4 should be 0.01 μfd. C_2, the regeneration capacity, must be determined by experiment; usual values are between 50 and 150 μμfd. The capacity of C_5, usually 100 μμfd., should be adjusted so that the oscillator is not overloaded.

of the following stage and the tube and stray capacities, forms a circuit tuned to a lower frequency than that of the crystal.

● 4-5 HARMONIC-GENERATING CRYSTAL OSCILLATORS

Tri-tet oscillator — The Tri-tet oscillator circuit is shown in Fig. 407. In this circuit the screen grid is operated at ground potential and the cathode at an r.f. potential above ground. The screen-grid acts as the anode of a triode crystal oscillator, while the plate or output circuit is tuned to the oscillator frequency or, for harmonic output, to a multiple of it.

Besides harmonic output, the Tri-tet circuit has the "buffering" feature of electron-coupling between crystal and output circuits (§ 4-2). This makes the crystal frequency less susceptible to changes in loading or tuning and hence improves the stability.

If the output circuit is to be tuned to the same frequency as the crystal, a tube having low grid plate capacity (§ 3-2, 3-5) must be used, otherwise there may be excessive feedback and danger of fracturing the crystal.

The cathode tank circuit, L_1C_1, is not tuned to the frequency of the crystal, but to a con-

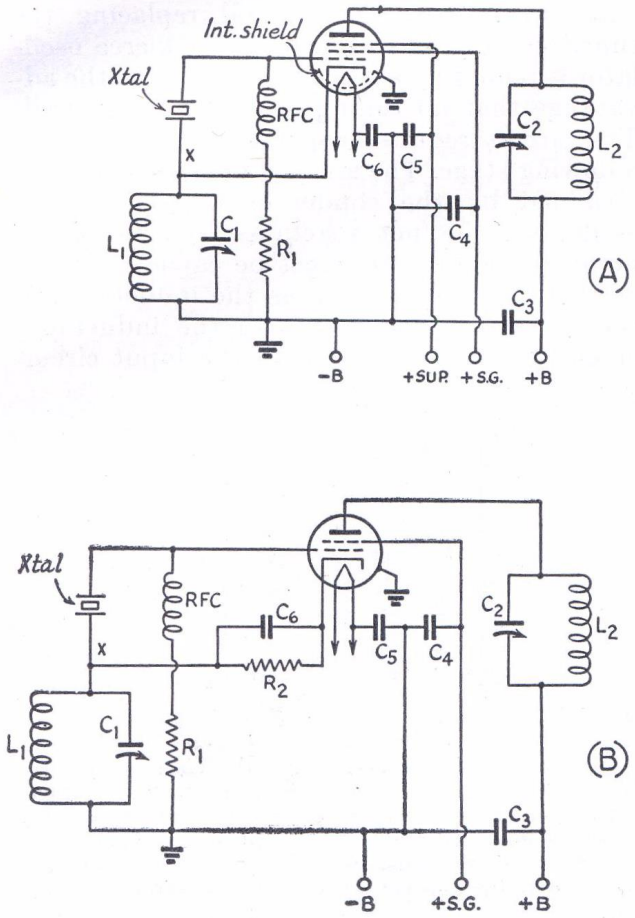

Fig. 407 — Tri-tet oscillator circuit, using pentodes (A) or beam tetrodes (B). C_1 and C_2, 200-$\mu\mu$fd. variable; C_3, C_4, C_5, C_6, 0.001 to 0.01 μfd., not critical; R_1, 20,000 to 100,000 ohms; R_2, 400 ohms for 400- or 500-volt operation.

Following specifications for cathode coils, L_1, are based on a coil diameter of 1½ inches and length 1 inch; turns should be spaced evenly to fill the required length. For 1.75-Mc. crystal, 32 turns; 3.5 Mc., 10 turns, 7 Mc., 6 turns. The screen should be operated at 250 volts or less. Audio beam tetrodes such as the 6L6 and 6L6G should be used only for second-harmonic output. Flashlight bulb may be inserted at X (§ 4-3).

The L-C ratio in the plate tank, L_2C_2, should be adjusted so that the capacity in use is 75 to 100 $\mu\mu$fd. for fundamental output and about 25 $\mu\mu$fd. for second harmonic output.

siderably higher frequency. Recommended values for L_1 are given under the diagram. C_1 should be set as near minimum capacity as is consistent with good output. This reduces the crystal voltage.

With pentode-type tubes having separate suppressor connections, the suppressor may be connected directly to ground or may be operated at about 50 volts positive. The latter method will give somewhat higher output than with the suppressor connected to ground.

With transmitting pentodes or beam tubes operated at 500 volts on the plate an output of 15 watts can be obtained on the fundamental and very nearly as much on the second harmonic.

Grid-plate oscillator — In the grid-plate oscillator, Fig. 408, the crystal is connected between grid and ground and the cathode tuned circuit C_2RFC is tuned to a lower frequency than that of the crystal. This circuit gives high output on the fundamental crystal frequency with low crystal current. The output on even harmonics (2nd, 4th, etc.) is not as great as that obtainable with the Tri-tet, but the output on odd harmonics (3rd, 5th, etc.) is appreciably better.

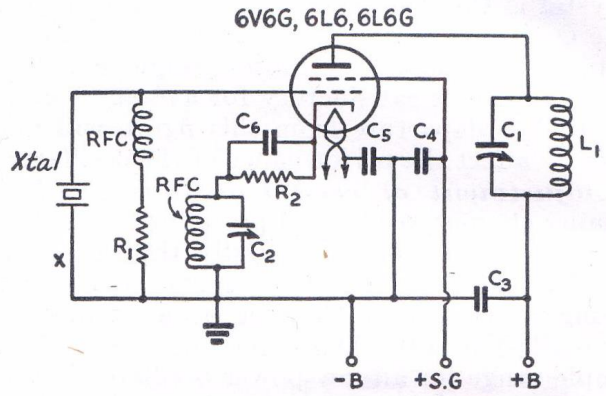

Fig. 408 — Grid-plate crystal oscillator circuit. In the cathode circuit, RFC is a 2.5-mh. r.f. choke. Other constants are the same as in Fig. 506. X indicates point where crystal-current indicator may be inserted (§ 4-3).

If harmonic output is not needed, C_2 may be a fixed capacity of 100 $\mu\mu$fd. The cathode coil, *RFC*, may be a 2.5-mh. choke, since the inductance is not critical.

Output power of 15 to 20 watts may be obtained at the crystal fundamental with a tube such as the 6L6G at plate and screen voltages of 400 and 250, respectively.

Tuning and adjustment — The tuning procedure for the Tri-tet oscillator is as follows: With the cathode tank condenser at about three-quarters scale, turn the plate tank condenser until there is a sharp dip in plate current, indicating that the plate circuit is in resonance. The crystal should be oscillating continuously regardless of the setting of the plate condenser. Set the plate condenser so that plate current is minimum. The load circuit may then be coupled and adjusted so that the oscillator delivers power. The minimum plate current will rise; it may be necessary to retune the plate condenser when the load is coupled to bring the plate current to a new minimum. Fig. 409 shows the typical behavior of plate current with plate-condenser tuning.

After the plate circuit is adjusted and the oscillator is delivering power, the cathode condenser should be readjusted to obtain optimum power output. The setting should be as far toward the low-capacity end of the scale as is consistent with good output; it may, in

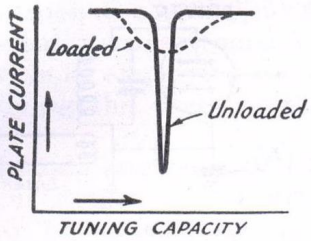

Fig. 409 — D.c. plate current vs. plate tuning capacity with the Tri-tet oscillator.

fact, be desirable to sacrifice a little output if so doing reduces the current through the crystal and thus reduces heating.

For harmonic output the plate tank circuit is tuned to the harmonic instead of the fundamental of the crystal frequency. A plate-current dip will occur at the harmonic. If the cathode condenser is adjusted for maximum output at the harmonic, this adjustment will usually serve for the fundamental as well. The crystal should be checked for evidence of excessive heating, the most effective remedy for which is to lower the plate and/or screen voltage, or to reduce the loading. With this circuit maximum r.f. voltage across the crystal is developed at maximum load so crystal heating should be checked with the load coupled.

When a fixed cathode condenser is used in the grid-plate oscillator the plate tank circuit is simply resonated, as indicated by the plate-current dip, to the fundamental or a harmonic of the output frequency, loading being adjusted to give optimum power output. If the variable cathode condenser is used, it should be set to give, by observation, the maximum power output consistent with safe crystal current. The variable condenser is chiefly useful in increasing the output on the third and higher harmonics; for fundamental operation the cathode capacity is not critical and the fixed condenser may be used.

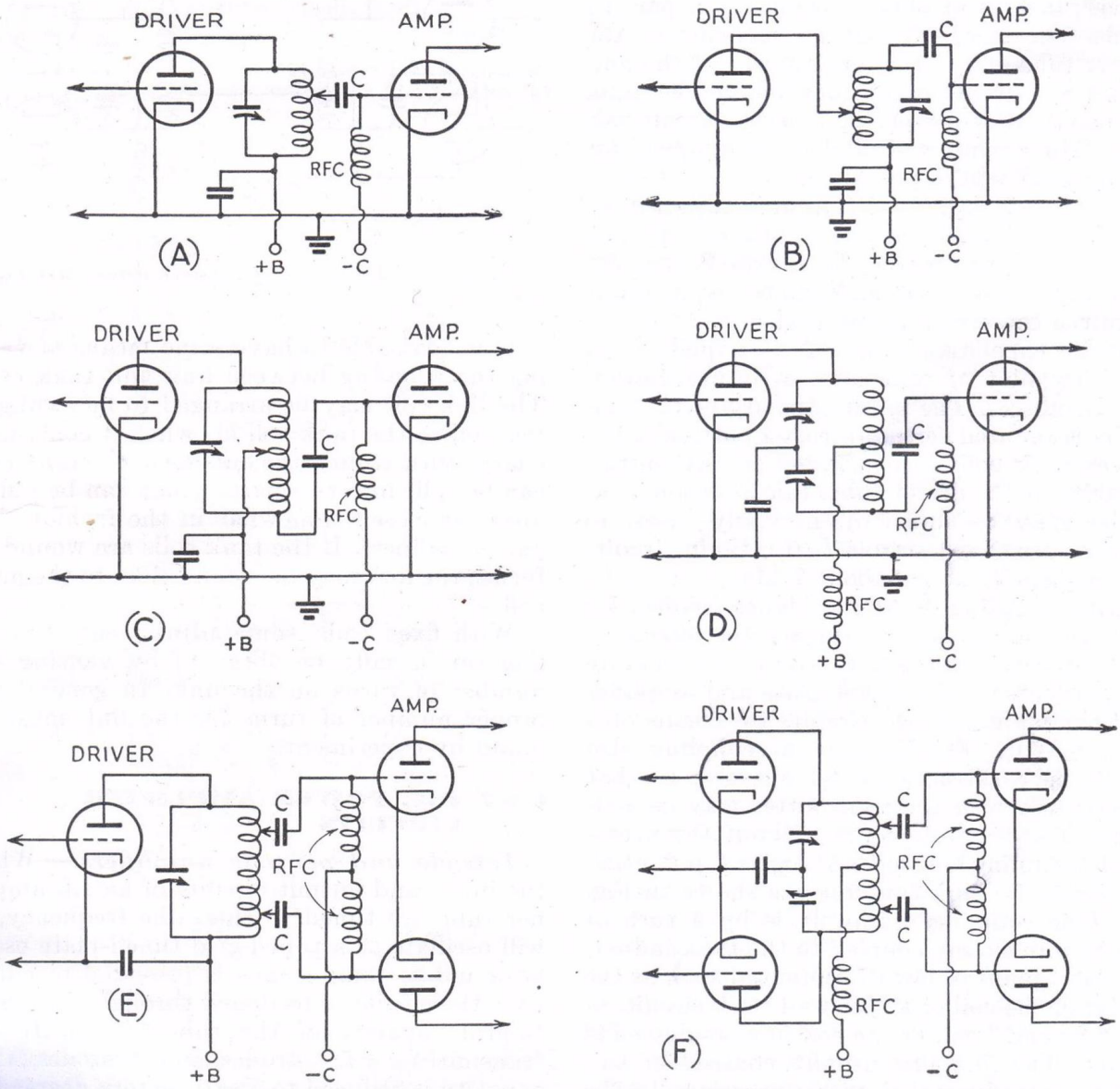

Fig. 410 — Direct- or capacity-coupled driver and amplifier stages. Coupling condenser capacity may be from 50 μμfd. to 0.002 μfd., not critical except when tapping the coils for control of excitation is not possible. Parallel plate feed to the driver and series grid feed to the amplifier may be substituted in any of the circuits (§ 3-7).

• 4-6 INTERSTAGE COUPLING

Requirements — The purpose of the interstage coupling system is to transfer, with as little energy loss as possible, the power developed in the plate circuit of one tube (the *driver*) to the grid circuit of the following amplifier tube or frequency multiplier. The circuits in practical use are based on the fundamental coupling arrangements described in § 2-11. In the process of power transfer, impedance transformation (§ 2-9) also is frequently necessary so that the proper exciting voltage and current will be available at the grid of the driven tube.

Capacity coupling — Fig. 410 shows several types of capacitive coupling. In each case, *C* is the coupling condenser. The coupling condenser serves also as a blocking condenser (§ 2-13) to isolate the d.c. plate voltage of the driver from the grid of the amplifier. The circuits of C and D are preferable when a balanced circuit is used in the output of the driver; instead of both tubes being in parallel across one side, the output capacity of the driver tube and the input capacity of the amplifier are across opposite sides of the tank circuit, thereby preserving a better circuit balance. The circuits of E and F are designed for coupling to a push-pull stage.

In A, B, E and F, excitation is adjusted by moving the tap on the coil to provide an optimum impedance match. In E and F, the two grid taps should be maintained equidistant from the center-tap on the coil.

While capacitive coupling is simplest from the viewpoint of construction, it has certain disadvantages. The input capacity of the amplifier is shunted across at least a portion of the driver tank coil. When added to the output capacity of the driver tube, this additional capacity may be sufficient, in many cases, to prevent use of a desirable L/C ratio in circuits for frequencies above about 7 Mc.

Link coupling — At the higher frequencies it is advantageous in reducing the effects of tube capacities on the L/C ratio to use separate tank circuits for the driver plate and amplifier grid, coupling the two circuits by means of a link (§ 2-11). This method of coupling also has some constructional advantages, in that separate parts of the transmitter may be constructed as separate units without the necessity for running long leads at high r.f. potential.

Circuits for link coupling are shown in Fig. 411. The coupling ordinarily is by a turn or two of wire closely coupled to the tank inductance at a point of low r.f. potential such as the center of the coil of a balanced tank circuit, or the "ground" end of the coil in a single-ended circuit. The link line usually consists of two closely-spaced parallel wires; occasionally the wires are twisted together, but this usually causes undue losses at high frequencies.

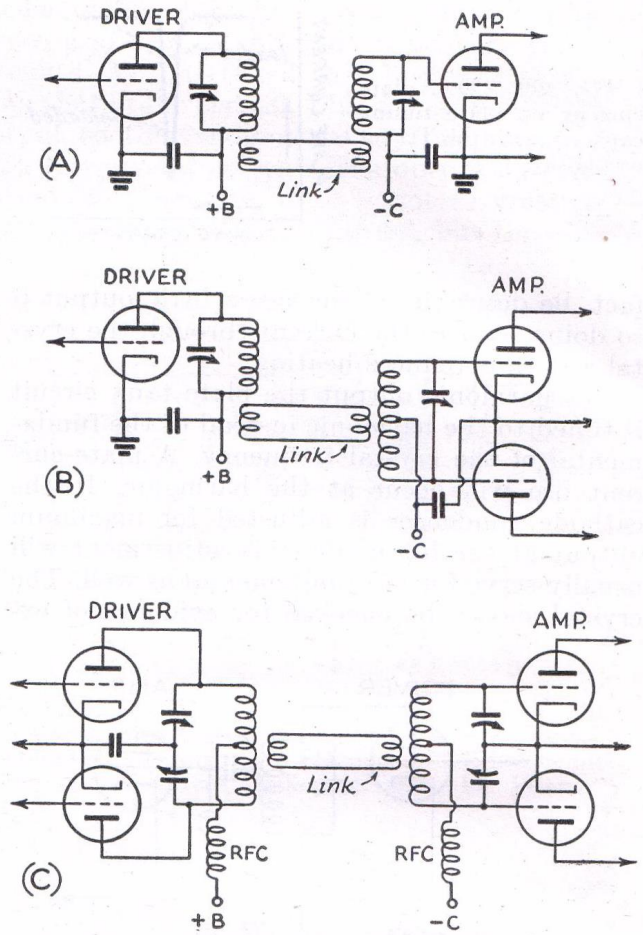

Fig. 411 — **Link coupling between driver and amplifier.**

It is advisable to have some means of varying the coupling between link and tank coils. The link coil may be arranged to be swung in relation to the tank coil or, when it consists of a large turn around the outside of the tank coil, can be split into two parts which can be pulled apart or closed somewhat in the fashion of a pair of calipers. If the tank coils are wound on forms, the link may be wound close to the main coil.

With fixed coils, some adjustment of coupling can usually be obtained by varying the number of turns on the link. In general the proper number of turns for the link must be found by experiment.

• 4-7 R.F. POWER AMPLIFIER CIRCUITS

Tetrode and pentode amplifiers — When the input and output circuits of an r.f. amplifier tube are tuned to the same frequency, it will oscillate as a tuned-grid tuned-plate oscillator unless some means is provided to eliminate the effects of feedback through the plate-to-grid capacity of the tube (§ 3-5). In all transmitting r.f. tetrodes and pentodes, this capacity is reduced to a satisfactory degree by the internal shielding between grid and plate provided by the screen. Tetrodes and pentodes

designed for audio use (such as the 6L6, 6V6, 6F6, etc.) are not sufficiently well screened for use as r.f. amplifiers without employing additional means for nullifying the effect of the grid-plate capacity.

Typical circuits of tetrode and pentode r.f. amplifiers are shown in Fig. 412. The high power sensitivity (§ 3-3) of pentodes and tetrodes, however, makes them prone to self-oscillate with very small values of feedback voltage, so that particular care must be used to prevent feedback by means external to the tube itself. This calls for adequate isolation of plate and grid tank circuits to prevent undesired magnetic or capacity coupling between them. The requisite isolation can be secured by keeping the circuits well separated and mounting the coils so that magnetic coupling is minimized, or by shielding (§ 2-11).

Triode amplifiers — The feedback through the grid-plate capacity of a triode cannot be eliminated in the tube itself, and therefore special circuit means, called *neutralization*, must be used to prevent oscillation. A properly-neutralized triode amplifier then behaves as though it were operating at very low frequencies where the grid-plate capacity feedback is negligible (§ 3-3).

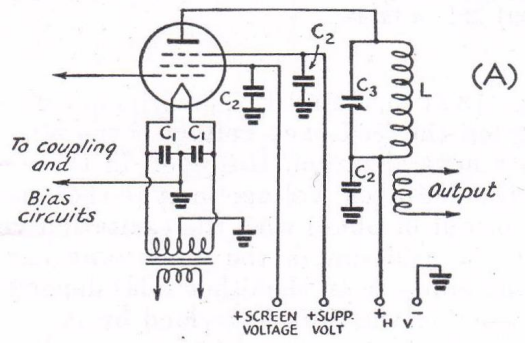

SINGLE-TUBE OR PARALLEL

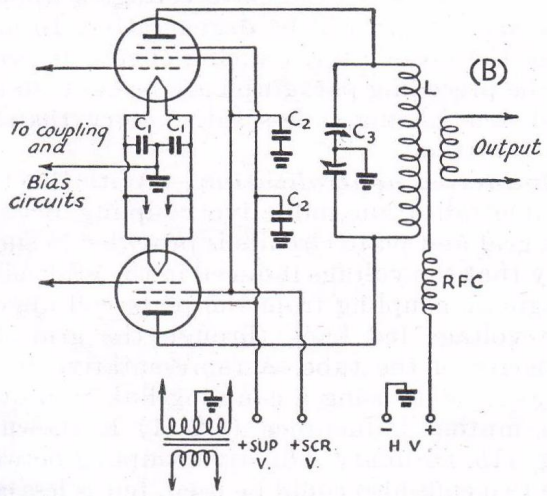

PUSH-PULL

Fig. 412 — **Tetrode-pentode r.f. amplifier circuits. C_1 — 0.01 μfd.; C_2 — 0.001 μfd. or larger; C_3-L — see § 4-8.**

In circuits for tetrodes, the suppressor-grid connection and by-pass condenser are omitted.

Neutralization — Neutralization amounts to taking some of the radio-frequency current from the output or input circuit of the amplifier and introducing it into the other circuit in such a way that it effectively cancels the current flowing through the grid-plate capacity of the tube, thus rendering it impossible for the tube to supply its own excitation. For complete neutralization it is necessary that the two currents be opposite in phase (§ 2-7) and equal in amplitude.

The out-of-phase current (or voltage) can be obtained quite readily by using a balanced tank circuit in either grid or plate, taking the neutralizing voltage from the end of the tank opposite that to which the grid or plate is connected. The amplitude of the neutralizing voltage can be regulated by means of a small condenser, the *neutralizing condenser*, having the same order of capacity as the grid-plate capacity of the tube. Circuits in which the neutralizing voltage is obtained from a balanced grid tank and fed to the plate through the neutralizing condenser are termed *grid-neutralized* circuits, while if the neutralizing voltage is obtained from a balanced plate tank and fed to the grid of the tube, the circuit is *plate-neutralized.*

Plate-neutralized circuits — The circuits for plate neutralization are shown in Fig. 413 at A, B and C. In A, voltage induced in the extension of the tank coil is fed back to the grid through the neutralizing condenser C_n to balance the voltage appearing between grid and plate. In this circuit the capacity required at C_n increases as the tank coil extension is made smaller; in general, neutralization is satisfactory over only a small range of frequencies since the coupling between the two sections of the tank coil will vary with the amount of capacity in use at C.

In B the tank coil is center-tapped to give equal voltages on either side of the center tap, the tank condenser being across the whole coil. The neutralizing capacity is approximately equal to the grid-plate capacity of the tube in this case. A disadvantage of the circuit, when used with the single tank condenser shown, is that the rotor of the condenser is above ground potential and hence small capacity changes caused by bringing the hand near the tuning control (*hand capacity*) cause detuning. In general, neutralization is complete at only one frequency since the plate-cathode capacity of the tube is across only half the tank coil; also, it is difficult to secure an exact center-tap. Both these cause unbalance which in turn causes the voltages across the two halves of the coil to differ when the frequency is changed.

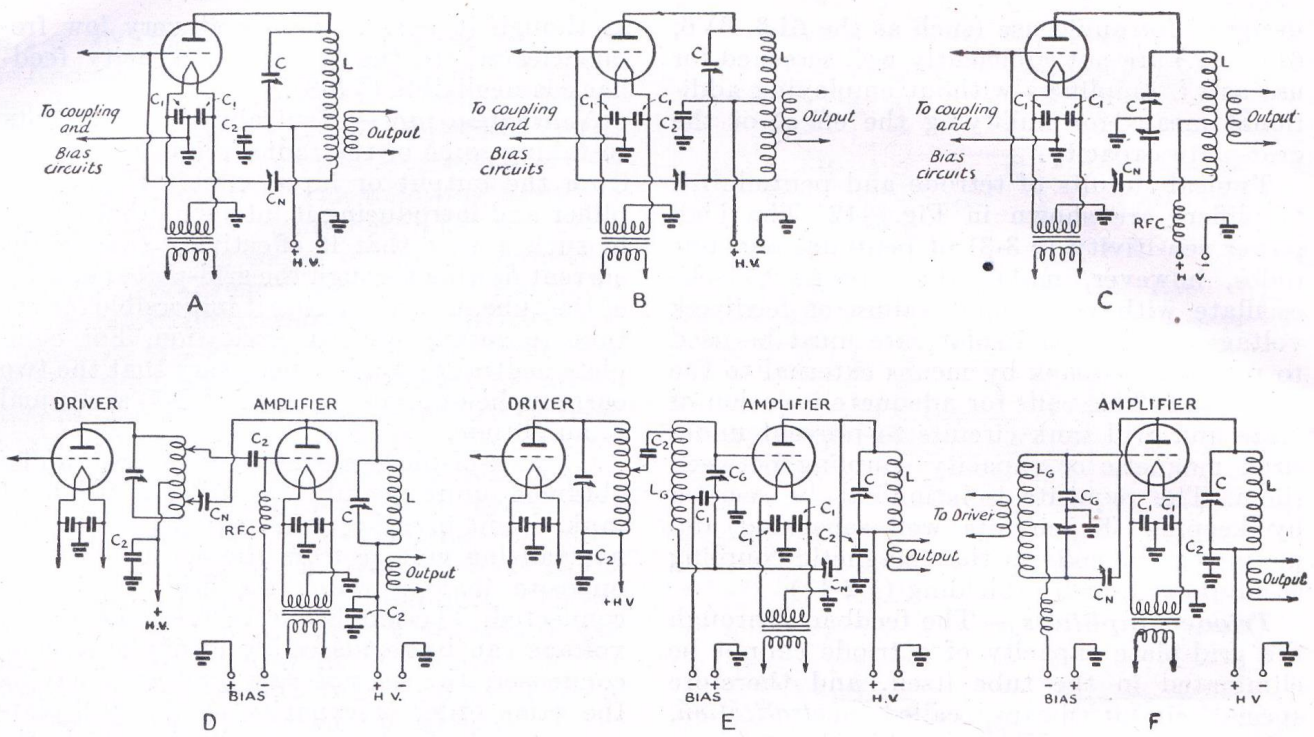

Fig. 413 — Triode amplifier circuits. Plate neutralization is shown in A, B and C; D, E and F show types of grid neutralization. Either capacitive or link coupling may be used with circuits of A, B or C.
C-L — See § 4-8.
C_G-L_G — Grid tank circuit.
C_N — Neutralizing condensers.
C_1 — 0.01 μfd.
C_2 — 0.001 μfd. or larger.

The circuit of C also uses a center-tapped tank circuit, the voltage division being secured by use of a balanced (split-stator) tank condenser, the two condenser sections being identical. C_n is approximately equal to the grid-plate capacity of the tube. In this circuit the upper section of the tank condenser is in parallel with the output capacity of the tube, hence the circuit can be completely neutralized at only one setting of the tank condenser unless a compensating capacity (Fig. 414) is connected across the lower section. In practice, if the capacity in use in the tank circuit is large compared to the plate-cathode capacity the unbalancing effect is not serious.

Grid-neutralized circuits — Typical circuits employing grid neutralization are shown in Fig. 413 at D, E and F. The principle of balancing out the feed-back voltage is the same as in plate neutralization. However, in these circuits the fed-back voltage may either be in phase or out of phase with the excitation voltage on the grid side of the input tank circuit (and the opposite on the other side) depending upon whether the tank is divided by means of a balanced condenser or a tapped coil. Circuits such as those at D and E neutralized by ordinary procedure (described below) will be regenerative when the plate voltage is applied; the circuit at F will be degenerative. In addition, the normal unbalancing effects described in the preceding paragraph are present, so that grid neutralizing is less satisfactory than the plate method.

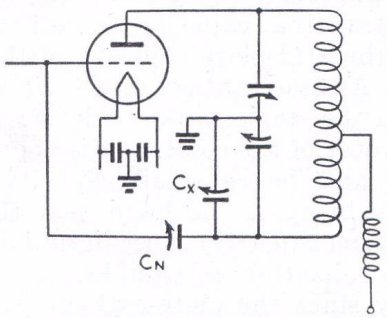

Fig. 414 — Compensating for capacity unbalance in the single-tube neutralizing circuit. C_x, the balancing capacity, should be variable and should have a maximum capacity somewhat larger than the output capacity of the tube. It is adjusted to minimize shift in neutralizing capacity at C_n as the frequency is changed.

Inductive neutralization — With this type of neutralization inductive coupling between the grid and plate circuits is provided in such a way that the voltage induced in the grid coil by magnetic coupling from the plate coil opposes the voltage fed back through the grid-plate capacity of the tube. A representative circuit arrangement, using a coupling link to provide the mutual inductance (§ 2-11) is shown in Fig. 415. Ordinary inductive coupling between the two coils also could be used, but is less convenient. Inductive neutralization is complete at only one frequency, since the effective mutual inductance changes to some extent with tuning, but is useful in cases where the grid-plate capacity of the tube being neutralized is

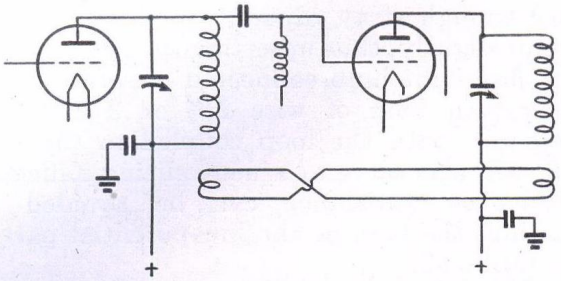

Fig. 415 — Inductive neutralizing circuit. The link coils should have one or two turns and should be coupled to the grounded ends of the tank coils. Neutralization is adjusted by moving the link coils in relation to the tank coils. Reversal of connections to one of the coils may be required to obtain the proper phasing.

very small and suitable circuit balance cannot be obtained with circuits using neutralizing condensers.

Push-pull neutralization — With push-pull circuits two neutralizing condensers are used as shown in Fig. 416. In these circuits the grid-plate capacities of the tubes and the neutralizing capacities form a capacity bridge (§ 2-11) which is independent of the grid and plate tank circuits. The neutralizing capacities are approximately the same as the tube grid-plate capacities. With electrically similar tubes and symmetrical construction (stray capacities to ground equal on both sides of the circuit) the neutralization is complete and independent of frequency. A circuit using a balanced condenser, as at B, is preferred since it is an aid in obtaining good circuit balance.

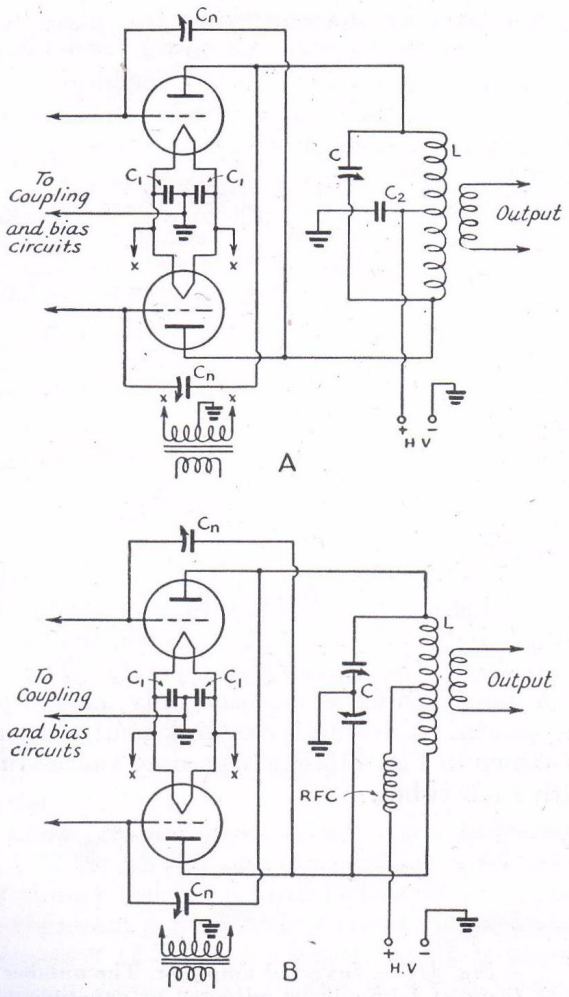

Fig. 416 — Push-pull triode amplifier circuits with "cross-neutralization." Either capacitive or link coupling may be used.
C-L — See § 4-8.
C_n — Neutralizing condensers.
C_1 — 0.01 μfd.
C_2 — 0.001 μfd. or larger.

Frequency effects — The effects of slight dissymmetry in a neutralized circuit become more important as the frequency is raised, and may be sufficient at ultra-high frequencies (or even lower) to prevent good neutralization. At these frequencies the inductances and stray capacities of even short leads become important elements in the circuit, while input loading effects (§ 7-6) may make it impossible to get proper phasing, particularly in single-tube circuits. In such cases the use of a push-pull amplifier, with its general freedom from the effects of dissymmetry, is not only much to be preferred but may be the only type of circuit which can be satisfactorily neutralized.

Neutralizing condensers — In most cases the neutralizing voltage will be equal to the r.f. voltage between the plate and grid of the tube so that for perfect balance the capacity required in the neutralizing condenser theoretically will be equal to the grid-plate capacity. If, in the circuits having tapped tank coils, the tap is more than half the total number of turns from the plate end of the coil, the required neutralizing capacity will increase approximately in proportion to the relative number of turns in the two sections of the coil.

With tubes having grid and plate connections brought out through the bulb, a condenser having at about half-scale or less a capacity equal to the grid-plate capacity of the tube should be chosen. If the grid and plate leads are brought through a common base, the capacity needed is greater because the tube socket and its associated wiring adds some capacity to the actual inter-element capacities.

When two or more tubes are connected in parallel, the neutralizing capacity required will be in proportion to the number of tubes.

The voltage rating of neutralizing condensers must at least equal the r.f. voltage across the condenser plus the sum of the d.c. plate voltage and the grid-bias voltage.

Neutralizing procedure — The procedure in neutralizing is essentially the same for all tubes and circuits. The filament of the tube should be lighted and the excitation from the preceding stage should be fed to the grid circuit. There should be no plate voltage on the amplifier.

The grid-circuit milliammeter makes a good

neutralizing indicator. If the circuit is not completely neutralized, tuning of the plate tank circuit through resonance will change the tuning of the grid circuit and affect its loading, causing a change in the rectified d.c. grid current. The setting of the neutralizing condenser which leaves the grid current unaffected as the plate tank is tuned through resonance is the correct one. If the circuit is out of neutralization, the grid current will drop perceptibly as the plate tank is tuned through resonance. As the point of neutralization is approached, by adjusting the neutralizing capacity in small steps, the dip in grid current as the plate condenser is swung through resonance will become less and less pronounced until, at exact neutralization, there will be no dip at all. Further change of the neutralizing capacity in the same direction will bring the grid-current dip back. The neutralizing condenser should always be adjusted with a screwdriver of insulating material to avoid hand-capacity effects.

Adjustment of the neutralizing condenser may affect the tuning of the grid tank or driver plate tank, so both circuits should be retuned each time a change is made in neutralizing capacity. In neutralizing a push-pull amplifier, the neutralizing condensers should be adjusted together, step by step, keeping their capacities as equal as possible.

With single-ended circuits having split-stator neutralizing, the behavior of the grid meter will depend somewhat upon the type of tube used. If the tube output capacity is not great enough to upset the balance, the action of the meter will be the same as in other circuits. With high-capacity tubes, however, the meter usually will show a gradual rise and fall as the plate tank is tuned through resonance, reaching a maximum right at resonance when the circuit is properly neutralized.

When an amplifier is not neutralized, a neon bulb touched to the plate of the amplifier tube or to the plate side of the tuning condenser will glow when the tank circuit is tuned through resonance, providing the driver has sufficient power. The glow will disappear when the amplifier is neutralized.

However, touching the neon bulb to such an ungrounded point in the circuit may introduce enough stray capacity to unbalance the circuit slightly, thus upsetting the neutralizing.

A flashlight bulb connected in series with a single-turn loop of wire 2½ or 3 inches in diameter, with the loop coupled to the tank coil, will also serve as a neutralizing indicator. Capacitive unbalance can be avoided by coupling the loop to the low-potential part of the tank coil.

Incomplete neutralization — If a setting of the neutralizing condenser can be found which gives minimum r.f. current in the plate tank circuit without completely eliminating it, there may be magnetic or capacity coupling between the input and output circuits external to the tube itself. Short leads in neutralizing circuits are highly desirable, and the input and output inductances should be so placed with respect to each other that magnetic coupling is minimized. Usually this requires that the axes of the coils should be at right angles to each other. In some cases it may be necessary to shield the input and output circuits from each other. Magnetic coupling can be detected by disconnecting the plate tank from the remainder of the circuit and testing for r.f. in it (by means of the flashlight lamp and loop) as the tank condenser is tuned through resonance. The driver stage must be operating, of course.

With single-ended amplifiers there are many stray capacities left uncompensated for in the neutralizing process. With large tubes, especially those having relatively high interelectrode capacities, these commonly neglected stray capacities can prevent perfect neutralization. Symmetrical arrangement of a push-pull amplifier is about the only way to obtain practically perfect balance throughout the amplifier.

The neutralization of tubes with extremely low grid-plate capacity, such as the 6L6, is often difficult, since it frequently happens that the wiring itself will introduce sufficient capacity between the right points to "overneutralize" the grid-plate capacity. The use of a neutralizing condenser only aggravates the condition. Inductive or link neutralization as shown in Fig. 415 has been used successfully with such tubes.

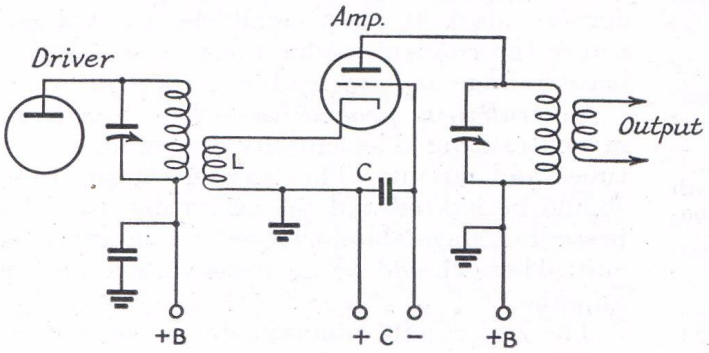

Fig. 417 — Inverted amplifier. The number of turns at L should be adjusted by experiment to give optimum grid excitation to the amplifier. By-pass condenser C may be 0.001 μfd. or larger.

The inverted amplifier — The circuit of Fig. 417 avoids the necessity for neutralization by operating the control grid of the tube at ground potential, thus making it serve as a shield between the input and output circuits. It is particularly useful with tubes of low grid-plate capacity which are difficult to neutralize by ordinary methods. Excitation is applied between grid and cathode through the coupling coil L; since this coil is common to both the plate and grid circuits the amplifier is degenerative with the circuit constants normally used, hence more excitation voltage and power are required for a given output than is the case with a neutralized amplifier. The tube used must have low plate-cathode capacity (of the order of 1 $\mu\mu$fd. or less) since larger values will give sufficient feedback to permit it to oscillate, the circuit then becoming the ultraudion (§ 3-7). Tubes having sufficiently low plate-cathode capacity (audio pentodes, for example) can be used without danger of oscillation at frequencies up to 30 Mc. or so.

• 4-8 POWER AMPLIFIER OPERATION

Efficiency — An r.f. power amplifier is usually operated Class-C (§ 3-4) to obtain a reasonably-high value of plate efficiency (§ 3-3). The higher the plate efficiency the higher the power input that can be applied to the tube without exceeding the plate dissipation rating (§ 3-2), up to the limits of other tube ratings (plate voltage and plate current). Plate efficiencies of the order of 75% are readily obtainable at frequencies up to the 30–60 megacycle region. The *overall* efficiency of the amplifier will be lower by the percentage of power lost in the tank and coupling circuits, so that the actual efficiency is less than the plate efficiency.

Operating angle — The operating angle is the proportionate part of the exciting grid-voltage cycle (§ 2-7) during which plate current flows, as shown in Fig. 418. For Class-C operation it is usually in the vicinity of 120–150 degrees which, with other operating considerations, results in an optimum relationship between plate efficiency and grid driving power.

Load impedance — The load impedance (§ 3-3) for an r.f. power amplifier is adjusted, by tuning the plate tank circuit to resonance, to represent a pure resistance at the operating frequency (§ 2-10). Its value, which is usually in the neighborhood of a few thousand ohms, is adjusted by varying the loading on the tank circuit, closer coupling to the load giving lower values of load resistance and vice versa (§ 2-11). The load may be either the grid circuit of a following stage or the antenna circuit.

For highest efficiency the value of load resistance should be relatively high, but if only limited excitation voltage is available greater power output will be secured by using a lower value of load resistance. The latter adjustment is accompanied by a decrease in plate efficiency. The optimum load resistance is that which, for the maximum permissible peak

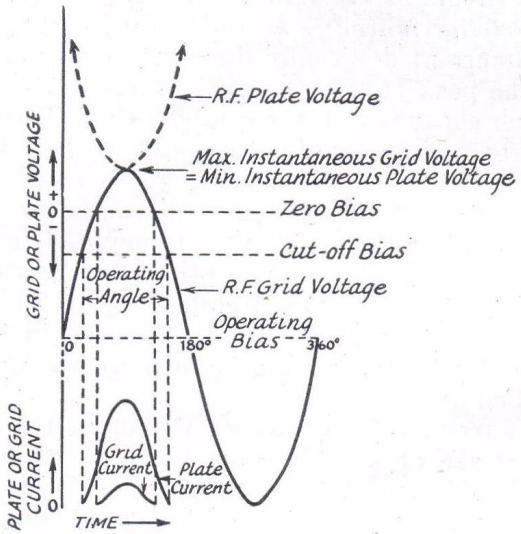

Fig. 418 — **Instantaneous voltages and currents in a Class-C amplifier operating under optimum conditions.**

plate current, causes the minimum instantaneous plate voltage (Fig. 418) to be equal to the maximum instantaneous grid voltage required to cause the peak plate current to flow; this gives the optimum ratio of plate efficiency to required grid driving power.

R.f. grid voltage and grid bias — For most tubes optimum operating conditions result when the minimum instantaneous plate voltage is 10% to 20% of the d.c. plate voltage, so that the maximum instantaneous positive grid voltage must be approximately the same figure. Since plate current starts flowing when the instantaneous voltage reaches the cut-off value (§ 3-2), the d.c. grid voltage must be considerably higher than cut-off to confine the operating angle to 150 degrees or less (with grid bias at cut-off the angle would be 180 degrees). For an angle of 120 degrees the r.f. grid voltage must reach 50% of its peak value (§ 2-7) at the cut-off point. The corresponding figure for an angle of 150 degrees is 25%. Hence the operating bias required is the cut-off value plus 25% to 50% of the peak r.f. grid voltage. These relations are shown in Fig. 418. The grid bias should be at least twice cut-off if the amplifier is to be plate modulated so that the operating angle will not be less than 180 degrees when the plate voltage rises to twice the steady d.c. value (§ 5-3). Because of their relatively high amplification factors, with most modern tubes Class-C operation requires considerably more than twice cut-off bias to make the operating angle fall in the region mentioned above.

Suitable operating conditions are usually given in the data accompanying the type of tube used.

Grid bias may be secured either from a bias source (*fixed bias*), a grid leak (§ 3-6) of suitable value, or from a combination of both. When a bias supply is used, its voltage regulation should be taken into consideration (§ 8-9).

Driving power — As indicated in Fig. 418, grid current flows only during a small portion of the peak of the r.f. grid voltage cycle. The power consumed in the grid circuit is therefore approximately equal to the peak r.f. grid voltage multiplied by the average rectified grid current as read by a d.c. milliammeter. The peak r.f. grid voltage, if not included in the tube manufacturer's operating data, can be estimated roughly by adding 10% to 20% of the plate voltage to the operating grid bias, assuming the operating conditions are as described above.

At frequencies up to 30 Mc. or so the grid losses are practically entirely those resulting from grid-current flow. At ultra-high frequencies, however, dielectric losses in the glass envelope and base materials become appreciable, together with losses caused by transit-time effects (§ 7-6), and may necessitate supplying several times the driving power indicated above. At any frequency, the driving stage should be capable of a power output two to three times the power it is expected the grid circuit of the amplifier will consume. This is necessary because losses in the tank and coupling circuits must also be supplied, and also to provide reasonably good regulation of the r.f. grid voltage. Good voltage regulation (see § 8-1 for general definition) insures that the waveform of the excitation voltage will not be distorted because of the changing load on the driver during the r.f. cycle.

Grid impedance — During most of the r.f. grid voltage cycle, no grid current flows, as indicated in Fig. 418, hence the grid impedance is infinite. During the peak of the cycle, however, the impedance may drop to very low values (of the order of 1000 ohms) depending upon the type of tube. Both the minimum and average values of grid impedance depend to a considerable extent on the amplification factor of the tube, being lower with tubes having large amplification factors.

The average grid impedance is equal to E^2/P, where E is the r.m.s. (§ 2-7) value of r.f. grid voltage and P the grid driving power. Under optimum operating conditions values of average grid impedance ranging from 2000 ohms for high-μ tubes to four or five times as much for low-μ types are representative. Values in the vicinity of 4000 to 5000 ohms are typical of modern triodes with amplification factors of 20 to 30.

Because of the large change in impedance during the cycle it is necessary that the tank circuit associated with the amplifier grid have fairly high Q so that the voltage regulation over the cycle will be good. The requisite Q may be obtained by adjusting the L/C ratio or by tapping the grid circuit across only part of the tank (§ 4-6).

Tank circuit Q — Besides serving as a means for transforming the actual load resistance to the required value of plate load impedance for the tube, the plate tank circuit also should suppress the harmonics present in the tube output as a result of the non-sinusoidal plate current (§ 2-7, 3-3). For satisfactory harmonic suppression a Q of 12 or more (with the circuit fully loaded) is desirable. A Q of this order is also helpful from the standpoint of securing adequate coupling to the load or antenna circuit (§ 2-11). The proper Q can be obtained by suitable selection of L/C ratio in relation to the optimum plate load resistance for the tube (§ 2-10).

For a Class-C amplifier operated under optimum conditions as described above, the plate load impedance is approximately proportional to the ratio of d.c. plate voltage to d.c. plate current. For a given effective Q, the tank capacity required at a given frequency will be inversely proportional to the parallel resistance (§ 2-10), so that it will also be inversely proportional to the plate-voltage/plate-current ratio. The capacity required on various amateur bands for a Q of 12 is shown in Fig. 419 as a function of this ratio. The capacity given is for single-ended tank circuits as shown in Fig. 420 at A and B. When a balanced tank circuit is used, the total tank capacity required is reduced to ¼ this value because the tube is connected across only half the circuit (§ 2-9). Thus if the plate-voltage/plate-current ratio calls for a capacity of 200 $\mu\mu$fd. in a single-ended circuit at the desired frequency, only 50 $\mu\mu$fd. would be needed in a balanced circuit. If a split-stator or balanced tank condenser is used, each section should have a capacity of 100 $\mu\mu$fd., the total capacity of the two in series being 50 $\mu\mu$fd. These are "in use" capacities, not simply the rated maximum capacity of the condenser. Larger values may be used with an increase in the effective Q.

To reduce energy loss in the tank circuit the inherent Q of the coil and condenser should be high. Since transmitting coils usually have Q's ranging from 100 to several hundred, the tank transfer efficiency is generally 90% or more. An unduly large C/L ratio is not advisable since it will result in large circulating r.f. tank current and hence relatively large losses in the tank, with a consequent reduction in the power available for the load.

Tank constants — When the capacity nec-

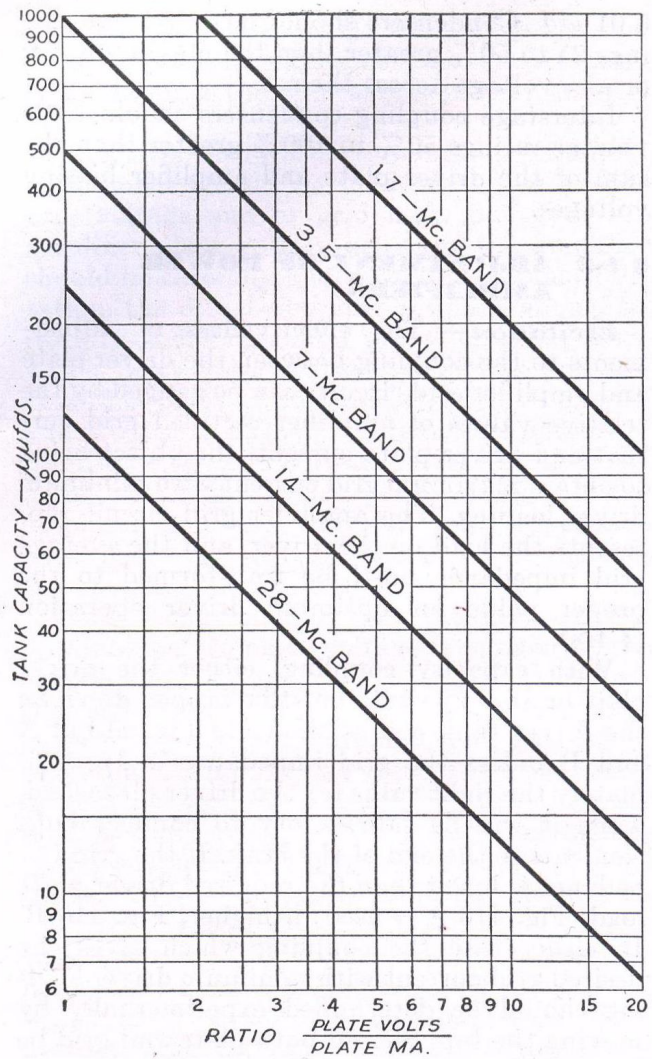

Fig. 419 — Chart showing tank-capacities required for "Q" of 12 with various ratios of plate voltage to plate current for various frequencies. In circuits F, G, H (Fig. 420), the capacities shown in the graph may be divided by four. In circuits C, D, E, I, J and K, the capacity of each section of the split-stator condenser may be one-half that shown by the graph. Values given by the graph should be used for circuits A and B.

essary for a *Q* of 12 has been determined from Fig. 419, the inductance required to resonate at the given frequency can be found by means of the formula in § 2-10. Alternatively, the required number of turns on coils of various construction can be found from the charts of Figs. 421 and 422.

Fig. 421 is for coils wound on receiving-type forms having a diameter of 1½ inches and ceramic forms having a diameter of 1¾ inches and winding length of 3 inches. Such coils would be suitable for oscillator and buffer stages where the power is not over 50 watts. In all cases the number of turns given must be wound to fit the length indicated and the turns should be evenly spaced.

Fig. 422 gives data on coils wound on transmitting-type ceramic forms. In the case of the smallest form, extra curves are given for double-spacing (winding turns in alternate grooves). This is sometimes advisable in the case of 14- and 28-Mc. coils when only a few turns are required. In all other cases it is assumed that the specified number of turns is wound in the grooves without any additional spacing.

Ratings of components — The peak voltage to be expected between the plates of a tank condenser depends upon the arrangement of the tank circuit as well as the d.c. plate voltage. Peak voltage may be determined from Fig. 420, which shows all of the commonly used tank-circuit arrangements. These estimates assume

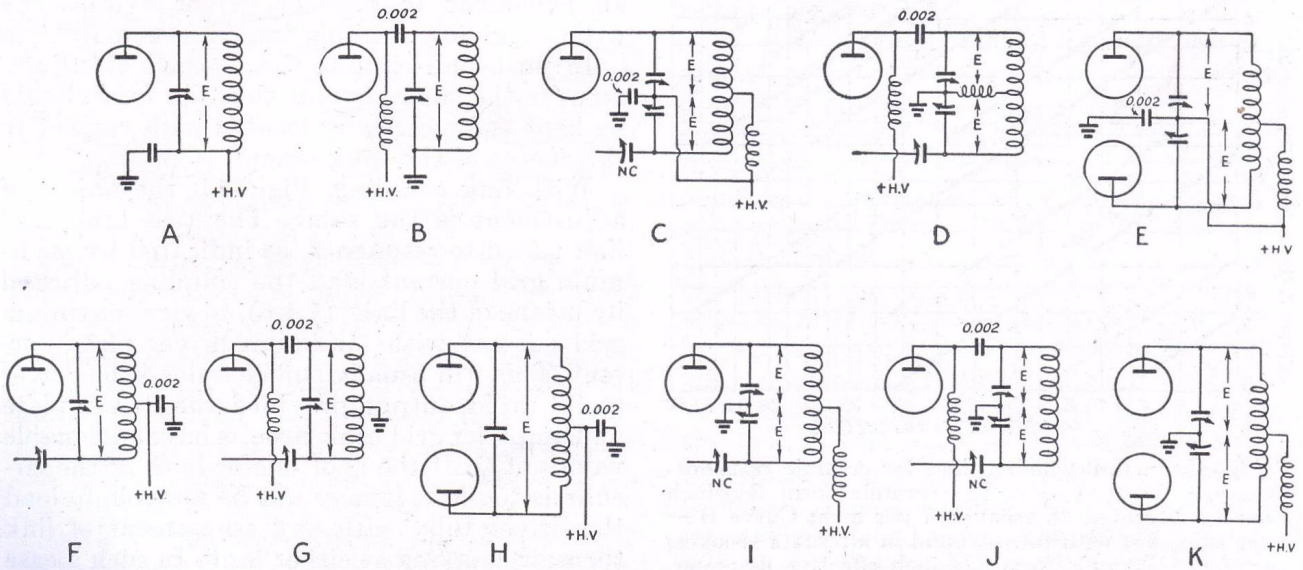

Fig. 420 — In circuits A, B, C, D and E, the peak voltage E will be approximately equal to the d.c. plate voltage applied for c.w. or twice this value for phone. In circuits F, G, H, I, J and K, E will be twice the d.c. plate voltage for c.w. or 4 times the plate voltage for phone. Circuit is assumed to be fully loaded. Tubes in parallel in any of the circuits will not affect the peak voltage. Circuits A, C, E, F, G and H require that the tank condenser be insulated from chassis or ground and be provided with a suitably insulated shaft coupling for tuning.

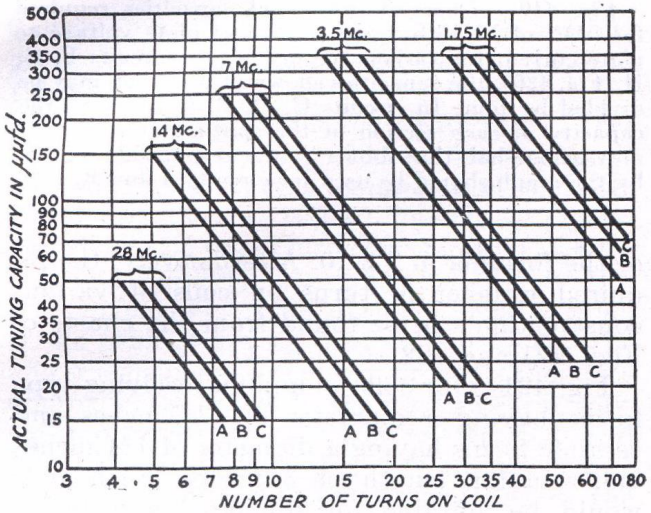

Fig. 421 — Coil-winding data for receiving-type forms, diameter 1½ inches. Curve A — winding length, 1 inch; Curve B — winding length, 1½ inches; Curve C — winding length, 2 inches. Curve C is also suitable for coils wound on 1¾-inch diameter ceramic forms with 3 inches of winding length.

that the amplifier is fully loaded; the voltage will rise considerably should the amplifier be operated without load. The figures include a reasonable factor of safety.

The condenser plate spacing required to withstand any particular voltage will vary with the construction. Most manufacturers specify peak voltage ratings for their condensers.

Plate or screen by-pass condensers of 0.001 μfd. should be satisfactory for frequencies as low as 1.7 Mc. Cathode-resistor and filament by-passes in r.f. circuits should be not less than 0.01 μfd. Condensers should have voltage ratings 25 to 50% greater than the maximum d.c. or a.c. voltage across them.

Interstage coupling condensers should have voltage ratings 50% to 100% greater than the sum of the driver plate and amplifier biasing voltages.

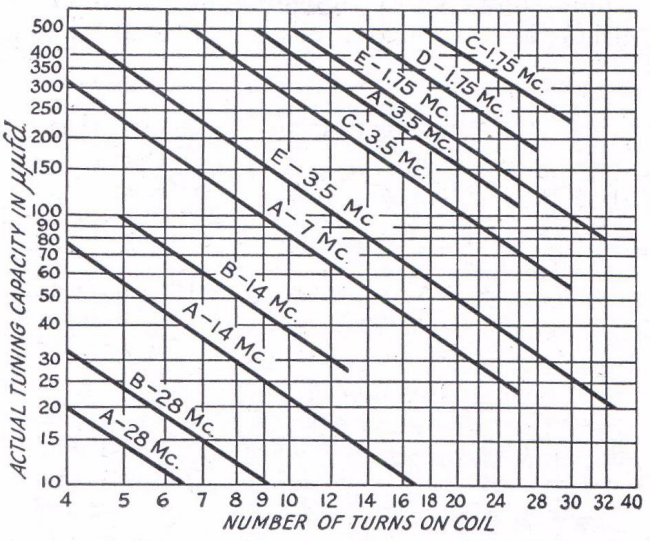

Fig. 422 — Coil-winding data for ceramic transmitting-type forms. Curve A — ceramic form 2½-inch effective diameter, 26 grooves, 7 per inch; Curve B — same as A, but with turns wound in alternate grooves; Curve C — ceramic form 2⅞-inch effective diameter, 32 grooves, 7.1 turns per inch, app.; Curve D — ceramic form 4-inch effective diameter, 28 grooves, 5.85 turns per inch, app.; Curve E — ceramic form 5-inch effective diameter, 26 grooves, 7 per inch. Coils may be wound with No. 12 or No. 14 wire.

• 4-9 ADJUSTMENT OF POWER AMPLIFIERS

Excitation — The effectiveness of adjustments to the coupling between the driver plate and amplifier grid circuits can be gauged by the relative values of amplifier rectified grid current and driver plate current, the object being to obtain maximum grid current with minimum driver loading. The amplifier grid circuit represents the load on the driver, and the average grid impedance must be transformed to the proper value for optimum driver operation (§ 4-8).

With capacity coupling, either the driver plate or amplifier grid must be tapped down on the driver tank coil as shown in Fig. 410 at A and B unless the grid impedance is approximately the right value for the driver plate load, when it will be satisfactory to connect both elements to the end of the tank. If the grid impedance is lower than the required driver plate load, Fig. 410-A is used; if higher, Fig. 410-B. In either case the coupling which gives the desired grid current with minimum driver loading should be determined experimentally by moving the tap. Should both plate and grid be connected to the end of the circuit it is sometimes possible to control the loading, when the grid impedance is low, by varying the capacity of the coupling condenser, *C*, but this method is not altogether satisfactory since it is simply an expedient to prevent driver overloading without giving suitable impedance matching.

In push-pull circuits the method of adjustment is the same, except that the taps should be kept symmetrically located with respect to the center of the tank circuit.

With link coupling, Fig. 411, the object of adjustment is the same. The two tanks are first tuned to resonance, as indicated by maximum grid current, and the coupling adjusted by means of the links (§ 4-6), to give maximum grid current with minimum driver plate current. This will usually suffice to load the driver to its rated output provided the driver plate and amplifier grid tank circuits have reasonable values of *Q*. If the *Q* of one or both of the circuits is too low, it may not be possible to load the driver fully with any adjustment of link turns or coupling at either tank. In such a case the *Q*s of the tank circuits must be increased to the point where adequate coupling is secured. If the driver plate tank is designed to have a *Q* of 12, the difficulty almost invariably is in the

amplifier grid tank. Its Q can be increased to a suitable value by adjustment of the L/C ratio or by tapping the load across part of the coil (§ 2-10).

Whatever the type of coupling, a preliminary adjustment should be made with the proper bias voltage and/or grid leak, but with the amplifier plate voltage off; then the amplifier should be carefully neutralized. After neutralization, the driver-amplifier coupling should be readjusted for optimum power transfer, after which plate voltage may be applied and the amplifier plate circuit adjusted to resonance and coupled to its load. Under actual operating conditions the grid current decreases below the value obtained without plate voltage on the amplifier and the effective grid impedance rises, hence the final adjustment is to recheck the coupling to take care of this shift.

With recommended bias, the grid current obtained before plate voltage is applied to the amplifier should be 25% to 30% higher than the value required for operating conditions. If this value is not obtained, and the driver plate input is up to rated value, the reason may be either improper matching of the amplifier grid to the driver plate or simply insufficient power output from the driver to take care of all losses. Driver operating voltages should be checked to assure they are up to rated values. If batteries are used for bias and are not strictly fresh, they should be replaced, since batteries which have been in use for some time often develop high internal resistance which effectively acts as additional grid-leak resistance. If a rectified a.c. bias supply is used, the bleeder or voltage-divider resistances should be checked to make certain that low grid current is not caused by greater grid-circuit resistance than is recommended. In this connection it is helpful to measure the actual bias when grid current is flowing, by means of a high-resistance d.c. voltmeter. There is also the possibility of loss of filament emission of the amplifier tube either from prolonged service or from operating the filament under or over the rated voltage.

Plate tuning — In preliminary tuning, it is desirable to use low plate voltage to avoid possible damage to the tube. With excitation and plate voltage applied, rotate the plate tank condenser until the plate current dips, then set the condenser at the minimum plate-current point (resonance). When the resonance point has been found, the plate voltage may be increased to its normal value.

With adequate excitation, the off-resonance plate current of a triode amplifier may be two or more times the normal operating value. With screen-grid tubes, the off-resonance plate current may not be much higher than the normal operating value since the plate current is principally determined by the screen rather than the plate voltage.

With reasonably efficient operating conditions, the minimum plate current with the amplifier unloaded will be a small fraction of

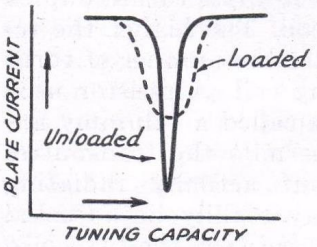

Fig. 423 — Typical behavior of d.c. plate current with tuning of an amplifier.

the rated plate current for the tube (usually a fifth or less) since with no load the parallel impedance of the tank circuit is high. If the excitation is low, the "dip" will not be very marked, but with adequate excitation the plate current at resonance without loading will be just high enough so that the d.c. plate power input supplies all the losses in the tube and circuit. As an indication of probable efficiency, the minimum plate current value should not be taken too seriously, because without load the Q of the circuit is high and the tank current relatively large. When the amplifier is delivering power to a load, the circulating current drops considerably and the tank losses correspondingly decrease. High minimum unloaded plate current is chiefly encountered at 28 Mc. and above, where tank losses are higher and the tank L/C ratio is usually lower than normal because of irreducible tube capacities. The effect is particularly noticeable with screen-grid tubes which have relatively high output capacity. Because of the decrease in tank r.f. current with loading, however, the actual efficiency under load is reasonably good.

With the load (antenna or following amplifier grid circuit) connected, the coupling between plate tank and load should be adjusted to make the tube take rated plate current, keeping the tank always tuned to resonance. As the output coupling is increased, the minimum plate current will also increase about as shown in Fig. 423. Simultaneously, the tuning becomes less sharp, because of the increase in effective resistance of the tank. If the load circuit simulates a resistance, the resonance setting of the tank condenser will be practically unchanged with loading; this is generally the case since the load circuit itself usually is also tuned to resonance. A reactive load (such as an antenna or feeder system which is not tuned exactly to resonance) may cause the tank condenser setting to change appreciably with loading since reactance as well as resistance is coupled into the tank (§ 2-11).

Power output — As a check on the operation of an amplifier, its power output may be

measured by the use of a load of known resistance coupled to the amplifier output as shown in Fig. 424. At A a thermoammeter *M* and non-inductive (ordinary wire-wound resistors are not satisfactory) resistance *R* are connected across a coil of a few turns coupled to the amplifier tank coil. The higher the resistance of *R*, the greater the number of turns required in the coupling coil. A resistor used in this way is generally called a "dummy antenna," since its use permits the transmitter to be adjusted without actually radiating power. The loading may readily be adjusted by varying the coupling between the two coils, so that the amplifier draws rated plate current when tuned to resonance. The power output is then calculated from Ohm's Law:

$$P \text{ (watts)} = I^2R$$

where *I* is the current indicated by the thermoammeter and *R* is the resistance of the non-inductive resistor *R*. Special resistance units are available for this purpose ranging from .73 to 600 ohms (simulating antenna and transmission-line impedances) at power ratings up to 100 watts. For higher powers, the units may be connected in series-parallel. The meter scale required for any expected value of power output may also be determined from Ohm's Law:

$$I = \sqrt{\frac{P}{R}}$$

Incandescent light bulbs can be used to replace the special resistor and thermoammeter.

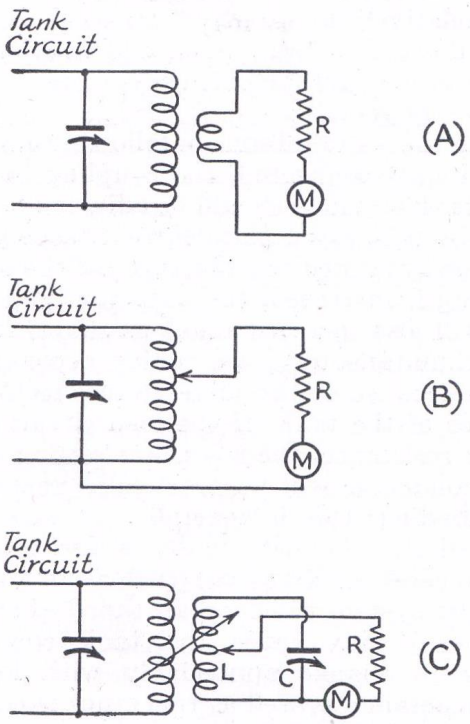

Fig. 424 — **"Dummy antenna" circuits for checking power output and making operating adjustments without applying power to the actual antenna.**

The lamp should be equipped with a pair of leads, preferably soldered to the terminals on the lamp base. The coupling should be varied until the greatest brilliance is obtained for a given plate input. In using lamps as dummy antennas, a size corresponding to the expected power output should be selected so that the lamp will operate near its normal brilliancy. Then when the adjustments have been completed an approximation of the power output can be obtained by comparing the brightness of the lamp with the brightness of one of similar power rating in a 115-volt socket.

The circuit of Fig. 424-B is for resistors or lamps of relatively high resistance. In using this circuit, care should be taken to avoid accidental contact with the plate tank when the power is on. This danger is avoided by circuit C, in which a separate tank circuit, *LC*, tuned to the operating frequency, is coupled to the plate tank circuit. The loading is adjusted by varying the number of turns across which the dummy antenna is connected on *L* and by changing the coupling between the two coils. With push-pull amplifiers, the dummy antenna should be tapped equally on either side of the center of the tank, when Fig. 424-B is used.

Harmonic suppression — The most important step to take in elimination of harmonic radiation (§ 4-8, 2-12) is to use an output tank circuit having a *Q* of 12 or more. Beyond this, it is desirable to avoid any considerable amount of over-excitation of a Class-C amplifier, since excitation in excess of that required for normal Class-C operation further distorts the plate-current pulse and increases the harmonic content in the output of the amplifier even though the proper tank *Q* is used. If the antenna system will accept harmonic frequencies they will be radiated when present, consequently the antenna coupling system preferably should be selected with harmonic transfer in mind (§ 10-6).

Harmonic content can be reduced to some extent by preventing distortion of the r.f. grid voltage waveshape. This can be done by using a grid tank circuit with high effective *Q*. Link coupling between the driver and final amplifier are helpful, since the two tank circuits provide more attenuation than one at the harmonic frequencies. However, the advantages of link coupling in this respect may be nullified unless the *Q* of the grid tank is high enough to give good voltage regulation and thus prevent distortion in the grid circuit.

The stray capacity between the antenna coupling coil and the tank coil may be sufficient to couple harmonic energy into the antenna system. This coupling may be eliminated by the use of electrostatic shielding (*Faraday shield*) between the two coils. Fig. 425 shows the construction of such a shield, while Fig. 426 illustrates the manner in which it is installed.

The construction shown in Fig. 425 is used to prevent current flow in the shield, which would occur if the wires formed closed circuits since the shield is in the magnetic field of the tank coil. Should this occur there would be magnetic shielding as well as electrostatic; in addition, there would be an undesirable power loss in the shield.

Improper operation — Inexact neutralization or stray coupling between plate and grid circuits may result in regeneration. This effect is most evident with low excitation, when the amplifier will show a sudden increase in output when the plate tank circuit is tuned slightly to the high-frequency side of resonance. It is accompanied by a pronounced increase in grid current.

Self-oscillation is apt to occur with tubes of high power sensitivity such as the r.f. pentodes and tetrodes. In event of either regeneration or oscillation, circuit components should be arranged so that those in the plate circuit are well isolated from those of the grid circuit. Plate and grid leads should be made as short as possible and the screen should be by-passed as close to the socket terminal as possible. A cylindrical shield surrounding the lower portion of the tube up to the lower edge of the plate is sometimes required.

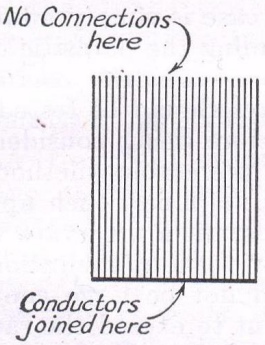

Fig. 425 — **The Faraday shield. It is made of parallel conductors, insulated from each other except at one end where all are joined. Stiff wire or small diameter rod may be used, spaced about the diameter of the wire or rod.**

"Double resonance" or two tuning spots on the plate tank condenser, one giving minimum plate current and the other maximum power output, may occur when the tank circuit Q is too low (§ 2-10). A similar effect also occurs at times with screen-grid amplifiers when the screen voltage regulation (§ 8-1) is poor, as when the screen is supplied through a dropping resistor. The screen voltage decreases with an increase in plate current, because the screen current increases under the same conditions. Thus the minimum plate current point causes the screen voltage, and hence power output, to be less than when a slightly higher plate current is drawn.

A phenomenon known as "grid emission" may occur when the amplifier tube is operated at higher than rated power dissipation on either the plate or grid. It is particularly likely to occur with tubes having oxide-coated cathodes such as the indirectly-heated types. It is caused by the grid reaching a temperature high enough to cause electron emission (§ 2-4). The electrons so emitted are attracted to the plate, further increasing the power input and heating, so that grid emission is characterized by gradually increasing plate current and heat which eventually will ruin the tube if the power is not removed. Grid emission can be prevented by operating the tube within its ratings.

• 4-10 PARASITIC OSCILLATIONS

Description — If the circuit conditions in an oscillator or amplifier are such that self-oscillation at some frequency other than that desired exist, the spurious oscillation is termed *parasitic*. The energy required to maintain a parasitic oscillation is wasted so far as useful output is concerned, hence an oscillator or amplifier having parasitics will operate at reduced efficiency. In addition, its behavior at the operating frequency often will be erratic. Parasitic oscillations may be higher or lower in frequency than the operating frequency of the amplifier.

The parasitic oscillation usually starts the instant plate voltage is applied or, when the amplifier is biased beyond cut-off, at the instant excitation is applied. In the latter case, the oscillation frequently will be self-sustaining after the excitation has been removed. At other times the oscillation may not be self-sustaining, becoming active only in the presence of excitation. It may be apparent only by the production of abnormal key clicks (§ 6-1) over a wide frequency range or by the presence of similarly wide-spread spurious side-bands (§ 5-2) with 'phone modulation.

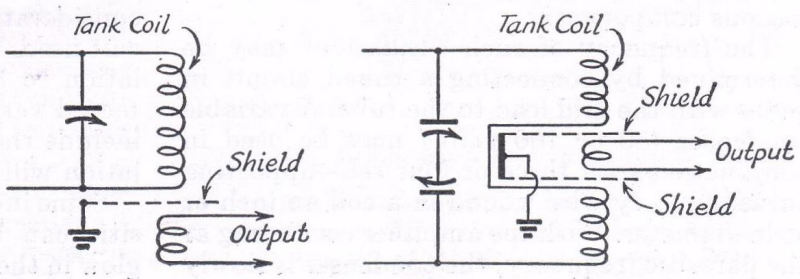

Fig. 426 — **Methods of using the Faraday shield. Two are required with a push-pull or balanced tank circuit. The shield should be somewhat larger than the diameters of the coupled coils, and should be inserted between them so each is completely unexposed to the other.**

Low-frequency parasitics — Parasitic oscillations at low frequencies (usually 500 kc. or less) are of the tuned-plate tuned-grid type, the tuned circuits being formed by r.f. chokes and associated by-pass and coupling condensers, with the regular tank tuning condensers having only a minor effect on the oscillation. The operating-frequency tank coil has negligible inductance for such low frequencies and may be short-circuited without affecting the oscillations. The oscillations do not occur when no r.f. chokes are used, hence whenever possible in series-fed circuits such chokes should be omitted. With single-ended amplifiers it is usually possible to arrange the circuit so that either the grid or plate circuit needs no choke. In push-pull stages where chokes must be used in both plate and grid circuits, it is helpful to connect an unby-passed grid leak from the choke to the bias supply or ground, thus placing the resistance in the parasitic circuit and tending to prevent oscillation. When the driver plate circuit has parallel feed and the amplifier grid circuit series feed (§ 3-7) this type of oscillation cannot occur so long as no choke is used in the series grid circuit, since the grid is grounded through the tank coil for the parasitic frequency.

Parasitics near operating frequency — In circuits utilizing a tap on the plate tank coil to establish a ground for a balanced neutralizing circuit, such as Fig. 413-B, a parasitic oscillation may be set up if the amplifier grid is tapped down on the grid (or driver plate) tank circuit for adjustment of driver-amplifier coupling (§ 4-6). In this case the turns between grid and ground, and between plate and ground, form with the stray and other capacities present a t.p.t.g. circuit (§ 3-7) which oscillates at a frequency somewhat higher than the nominal operating frequency. Such an oscillation can be prevented by dispensing with the taps in either the plate or grid circuit. Balancing the plate circuit by means of a split-stator condenser, as in Fig. 413-C, is recommended.

Ultra-high frequency parasitics — Parasitics in the u.h.f. region are likely to occur with any amplifier having a balanced tank circuit, particularly when associated with neutralizing connections. The parasitic circuit may be either of the t.p.t.g. or ultraudion type, and is formed by the leads connecting the various components.

The frequency of such oscillations may be determined by connecting a tuned circuit in series with the grid lead to the tube. A variable condenser (50 or 100 $\mu\mu$fd.) may be used in conjunction with three or four self-supporting turns of heavy wire wound in a coil an inch or so in diameter. With the amplifier oscillating at the parasitic frequency, the condenser is slowly tuned through its range until oscillations cease. In case this point is not found on first trial, the turns of the coil may be spread apart or a turn removed and the process repeated. While this may not be the simplest cure in all cases, the use of such a tuned circuit as a trap is an almost certain remedy, if the frequency can be determined, and introduces little if any loss at the operating frequency.

An alternative cure which is feasible when the oscillation is of the t.p.t.g. type is to detune the parasitic circuit in either the plate or grid circuit. Since this type of oscillation occurs most frequently with push-pull amplifiers, it may often be cured by making the grid and plate leads to their respective tank circuits of considerably different length. Similar considerations apply to neutralizing connections in push-pull circuits. The extra wire length may be coiled up in the form of a so-called "choke," which in this case is simply additional inductance for detuning the parasitic circuit.

Testing for parasitic oscillations — An amplifier always should be tested for parasitic oscillations before being considered ready for service. The preferable method is first to neutralize the amplifier, then apply sufficient fixed bias to permit a moderate value of plate current to flow without excitation. (The plate current should not be large enough to cause the power input to exceed the rated plate dissipation of the tube.) If the amplifier is free from self-starting parasitics the plate current will remain steady as the tank condensers are varied in capacity; also, there will be no grid current and a neon bulb touched either to the plate or grid will show no glow. Care must be used not to let the hand come in contact with any metal parts of the transmitter in using the neon bulb.

If any of these effects are present the frequency of the parasitic must first be determined. If r.f. chokes are used in both the plate and grid circuits one of them should be short-circuited to determine if the oscillation is at a low frequency; if so, it may be eliminated by the methods outlined above. If the test indicates that the parasitic is not a low-frequency oscillation, the grid trap described above should be tried for the u.h.f. type. The type which occurs near the operating frequency will not occur unless the plate and grid tank coils are both tapped, hence may be eliminated from consideration if this is not the case in the circuit used. When it is possible for such an oscillation to be present, its existence can be detected very readily by moving the grid tap to include the whole tank circuit, when the oscillation will cease.

Some indication of the frequency of the parasitic can be obtained from the color of the glow in the neon bulb. Usually it will be yellow-

ish with low-frequency oscillations and violet with u.h.f. oscillations.

If the amplifier is stable under the conditions described above, excitation should be applied and then removed to ascertain if a self-sustaining oscillation is set up with excitation. If the plate current does not return to the previous value when the excitation is cut off, the same tests should be applied to determine the parasitic frequency.

As a final test, the transmitter should be put on the air and a nearby receiver tuned over as wide a frequency range as possible to locate any off-frequency signals associated with the radiation. Parasitics usually can be recognized by their poor stability, as contrasted to the normal transmitter harmonics, which will have the same stability as the fundamental signal as well as the usual harmonic frequency relationship. Harmonics should be quite weak compared to the fundamental frequency, whereas parasitic oscillations may have considerable strength.

• 4-11 FREQUENCY MULTIPLICATION

Circuits — A frequency multiplier is an amplifier having its plate tank circuit tuned to a multiple (harmonic) of the frequency applied to its grid. The difference between a straight amplifier (§ 4-1) and a frequency multiplier is in the way in which it is operated rather than in the circuit. However, since the grid and plate tank circuits are tuned to different frequencies a triode frequency multiplier will not self-oscillate, hence does not need neutralization. A typical circuit arrangement is shown in Fig. 427-A. For screen-grid multipliers the circuit is the same as in Fig. 412-A. Under usual conditions the plate efficiency of a frequency multiplier drops off rapidly with an increase in the number of times the frequency is multiplied. For this reason most multipliers are used as *frequency doublers*, giving second harmonic output.

A special circuit for frequency doubling ("push-push" doubler) is shown in Fig. 427-B. The grids of the tubes are in push-pull and the plates in parallel, thus the plate tank circuit receives two pulses of plate current for each cycle of excitation frequency. The circuit is similar in principle to the full-wave rectifier (§ 8-3) where the ripple frequency is twice the applied frequency.

Push-pull amplifiers are suitable for frequency multiplication at odd harmonics but are unsuited to doubling or other even-harmonic multiplication because the even harmonics are largely balanced out in the tank circuit (§ 3-3).

Operating conditions and circuit constants — To obtain good efficiency the operating angle at the harmonic frequency must be 180 degrees or less, preferably in the vicinity of 150–120 degrees (§ 4-8). In a doubler this means that plate current should flow during only half this angle of fundamental frequency. Consequently the r.f. grid voltage, operating bias, and grid driving power must be increased considerably beyond the values obtaining for normal Class-C amplification. For comparable plate efficiency the bias will ordinarily be four to five times the normal Class-C bias, and the r.f. grid voltage must be considerably larger to drive the tube to the same peak plate current. Since the plate and grid current pulses under these conditions have the same peak amplitudes but only half the time duration as in a straight amplifier, the average d.c. values should be one-half those for normal Class-C operation. That is, a tube operated in this way will have the same plate efficiency as a Class-C amplifier, but can be operated at only half the plate input so that the output power also is halved. The driving power required is usually about twice that for straight-through amplification with the same plate efficiency.

Greater output can be secured by using a larger operating angle (lower grid bias) or lower plate load resistance to increase the plate

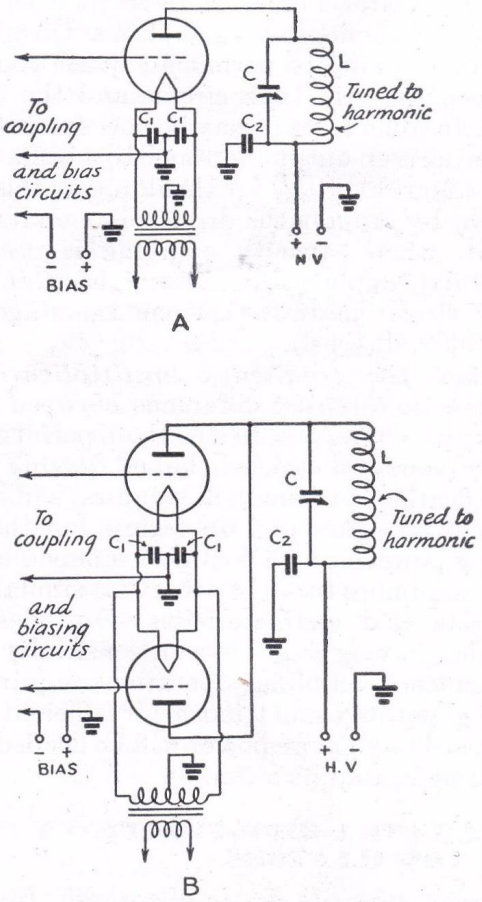

Fig. 427 — Frequency-multiplying circuits. A is for triodes, used either singly or in parallel. The push-push doubler is shown at B. Any type of coupling may be used between the grid circuit and the driver. C_1 should be 0.01 μfd. or larger; C_2, 0.001 μfd. or larger.

current, but this is accompanied by a decrease in efficiency. Since operation as described above is below the maximum plate dissipation rating of the tube, the decrease in efficiency can usually be tolerated in the interests of securing somewhat more power output. Ordinarily the efficiency is 40% to 50%.

The tank circuit should have reasonably high Q (12 is satisfactory) to give good output voltage regulation (§ 4-9) since a plate-current pulse occurs only once every two cycles of output frequency. A low-Q circuit (high L/C ratio) is helpful chiefly when the operating angle is greater than 180 degrees at the second harmonic. Such a tank circuit will have relatively high impedance to the considerable fundamental-frequency component of plate current which is present with large operating angles, and thus aid in reducing the average d.c. plate current.

The grid impedance of a frequency multiplier is considerably higher than that of a straight amplifier because of the high bias voltage. The average impedance can be calculated as previously described (§ 4-8). The L/C ratio of the grid tank circuit may be higher, therefore, for a given Q. It is often advantageous to use a fairly high ratio since a large r.f. voltage must be developed between grid and cathode, so long as it is not made too high (Q too low) to permit adequate coupling between the grid tank circuit and the driver stage. In some cases it may be necessary to step up the driver output voltage to obtain sufficient r.f. grid voltage for the doubler; this may be done by tapping the driver plate on its tank circuit, when capacity coupling is used, or by similar tapping or use of a higher C/L ratio in the driver plate tank when the stages are link-coupled (§ 4-6).

Tubes for frequency multiplication — There is no essential difference between tubes of various characteristics in their performance as frequency doublers. Tubes having high amplification factors will require somewhat less bias for equivalent operation, but the grid driving power needed is almost independent of the μ, assuming tubes of otherwise similar construction and characteristics. Pentodes and tetrodes having high power sensitivity will, as in normal amplifier operation, require less driving power than triodes for efficient doubling, although more power will be needed than for straight amplification.

● 4-12 ULTRA-HIGH-FREQUENCY OSCILLATORS

Linear circuits — At ultra-high frequencies tube interelectrode capacities become of increasing importance, so that eventually the shortest possible straight wire connection between elements, in conjunction with internal leads and capacities, represents the highest possible frequency to which the tube can be tuned. The tube usually will not oscillate up to this limit because of dielectric losses in the seals and other loading effects (§ 7-6). With most small tubes of ordinary construction the upper limit of oscillation is in the region of 150 Mc.; for higher frequencies it is necessary to use special u.h.f. tubes having low interelectrode capacities and low internal lead inductance. Only a few types are capable of developing more than a few watts at frequencies of 300 Mc. and higher.

Although ordinary coil and condenser tank circuits can be used at frequencies as high as 112 Mc., the Q of such circuits is low at ultra-high frequencies because of increased losses, so that both stability and efficiency are poor. For this reason special tank circuits of the linear type (§ 2-12) are preferable. These may be any multiple of a quarter wave in length, the Q increasing with the number of quarter waves. The quarter-wave line is generally used, however, because of the considerable space required for longer lines. At 112 Mc. it is also possible to build high-Q tank circuits with lumped constants, not in the form of ordinary coils and condensers but with large conducting surfaces to reduce resistance to the lowest possible value.

The oscillator circuits used are the same in principle as on the lower frequencies (§ 3-7) although frequently modified considerably to compensate for inherent capacities and inductances which are negligible at lower frequencies.

Two-conductor lines — The quarter-wave two-conductor open line is equivalent to a resonant circuit (§ 2-12) and can be used as the tank circuit (§ 3-7) in an oscillator. It should be used as a balanced circuit to avoid unequal currents in the two conductors and consequent loss of Q because of radiation.

A typical oscillator circuit of the ultraudion type is shown in Fig. 428. The resonant line is usually constructed of copper tubing to give a large conducting surface and hence reduce resistance, and also to make a mechanically-stable circuit and thus minimize the effects of vibration on the oscillator frequency. The line should be approximately a quarter wavelength long, although the resonant frequency will decrease somewhat when the tube with its internal capacities is connected across it so that a somewhat shorter length is ordinarily sufficient. The frequency can be changed by means of the shorting bar, which can be moved along the line to change its effective length.

The tube elements preferably should be tapped down on the line as shown to reduce the loading effect and thus prevent an undue decrease in Q. In general, these taps should be as close to the shorted end of the line as is con-

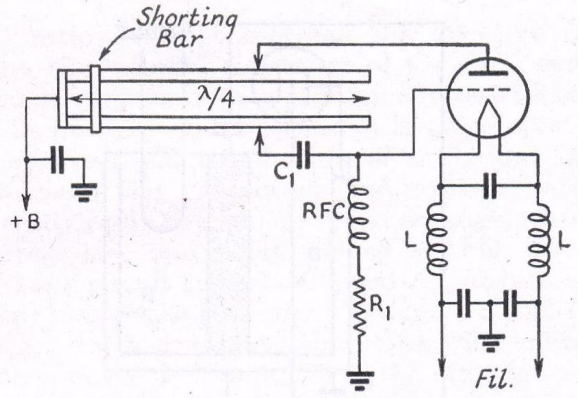

Fig. 428 — Single-tube line oscillator. The grid condenser, C_1, may be 50 $\mu\mu$fd.; grid leak, R_1, 5000 to 50,000 ohms depending upon the type of tube. The choke, RFC, will in general consist of relatively few turns (20 to 50) wound to a diameter of ¼ inch, although dimensions will change considerably with the frequency. By-pass condensers should be small in size to reduce lead inductance; 500 $\mu\mu$fd. is a satisfactory value.

sistent with reliable operation and satisfactory power output, since the frequency stability will be better under these conditions.

The coils (L) in the filament circuit are frequently required at 112 Mc. and higher to compensate for the effects of the inductance of connecting leads, which in many cases are long enough to cause an appreciable phase shift (§ 2-7) which reduces the oscillator efficiency. The effective length of the filament circuit to the points of connection to the lines should be approximately ½ wavelength to bring the filament to the same potential as the shorted ends of the lines. The proper inductance must be determined by experiment, the coils being adjusted until optimum stability and power output are obtained.

The oscillation frequency may also be adjusted by connecting a low-capacity variable condenser across the open end of the line. The added capacity makes it necessary to shorten the line considerably for a given frequency, however, and this together with the additional loss in the condenser causes a marked decrease in the Q of the line. These effects will be less if the condenser is connected down on the line rather than at the open end. Tapping down also gives a greater band-spread tuning effect (§ 7-7).

Push-pull oscillators — It is often advantageous to use a push-pull oscillator circuit at ultra-high frequencies, not only as a means to secure more power output than can be obtained from one tube but also because better circuit symmetry is possible with open lines. Fig. 429 shows a typical push-pull circuit of the t.p.t.g. (§ 3-7) type. The grid line is usually operated as the frequency-controlling circuit since it is not associated with the load and hence its Q can be kept high. The same adjustment considerations apply as in the case of the single-tube oscillator described in the preceding paragraph. The grid taps in particular should be tapped down as far as possible, thus improving the frequency stability.

It is also possible to use a linear tank in the grid circuit for frequency control in conjunction with a conventional coil-condenser tank in the plate circuit, where the lower Q does not have so great an effect on the stability.

Fig. 429-B shows a push-pull oscillator having tuned plate and cathode circuits, using linear tanks for each. The grids are connected together and grounded through the grid leak, R_1; ordinarily no by-pass condenser is needed across R_1. This circuit gives good power output at ultra-high frequencies, but is not especially stable unless the plates are tapped down on the plate tank circuit to avoid too great a reduction in Q. Tapping on the cathode line is not feasible for mechanical reasons, since one filament lead must be brought through the tubing in order to maintain both sides of the filament at the same r.f. potential.

Concentric-line circuits — At frequencies in the neighborhood of 300 Mc. radiation (§ 2-12) from the open line becomes so serious that the Q is greatly reduced. This is because the conductor spacing represents an appreciable fraction of the wavelength.

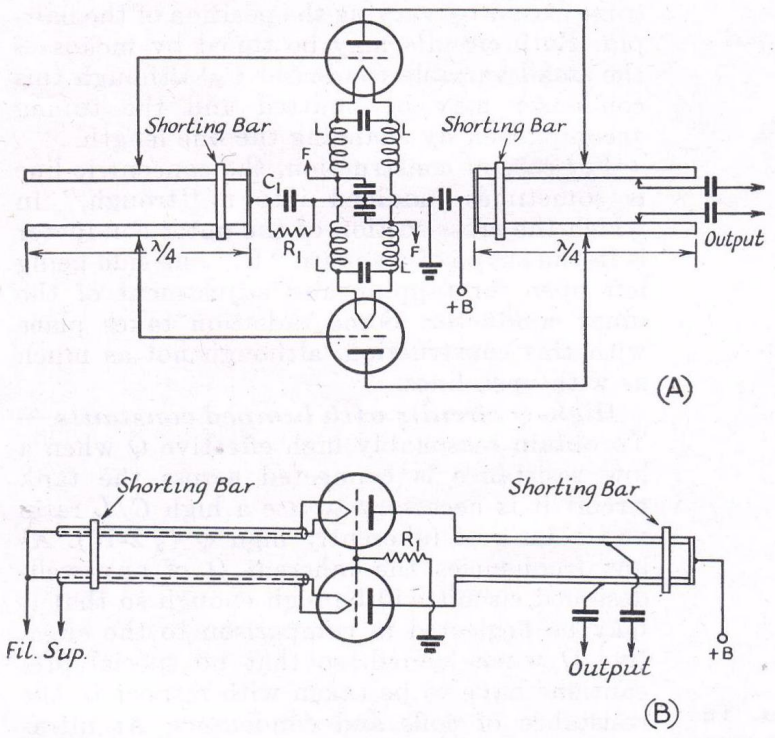

Fig. 429 — Push-pull line oscillator circuits. See Fig. 428 and text for discussion of circuit constants.

Consequently at these frequencies the concentric line must be used. In this type the field is confined inside the line so that radiation is negligible; there is a further advantage in that the outside of the line is "cold"; that is, no r.f. potentials develop between points on the outer surface. The concentric line also is advantageous at lower frequencies, but as it is more complicated to construct and length adjustment and tapping both are difficult mechanically, the open lines are generally favored.

The concentric line is usually constructed of copper pipes arranged concentrically and short-circuited at one end. The optimum ratio of inner diameter of the outer conductor to the outer diameter of the inner conductor is 3.6. Taps are usually made on the inner conductor and brought through a hole in the outer conductor to the tube element, as shown in Fig. 430. The tube loads the line in the same way as described in the preceding paragraphs, hence the length is generally shorter than an actual quarter wavelength. The length can be adjusted by a sliding short-circuiting disc at the closed end, a close fit and low-resistance contact being necessary to avoid reduction of the Q. It is also possible to make the inner conductor a pair of close-fitting concentric tubes so that one may be slid in and out of the other to change the effective conductor length.

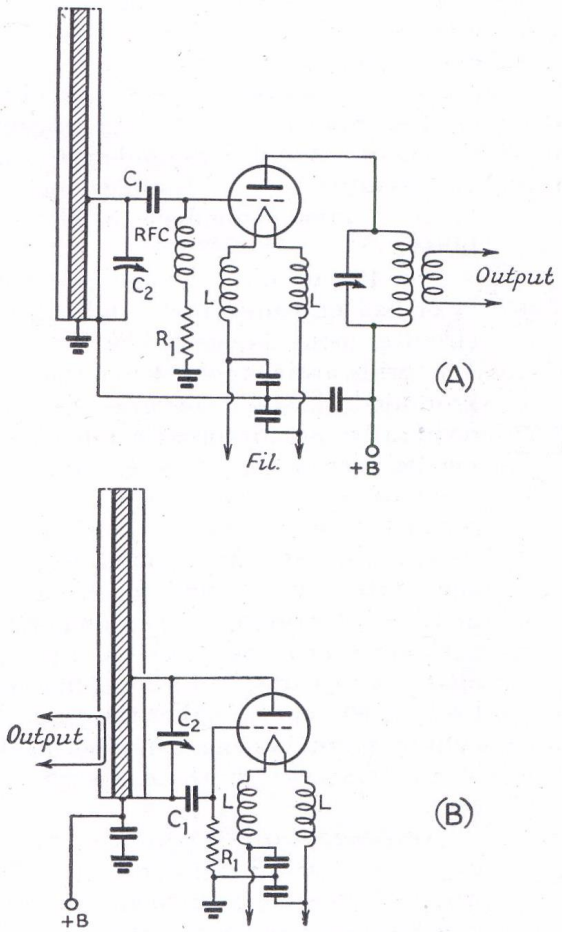

Fig. 430 — Concentric-line oscillator circuits. The line, usually of tubular conductors, is shown in cross-section. See Fig. 428 and text for discussion of circuit constants.

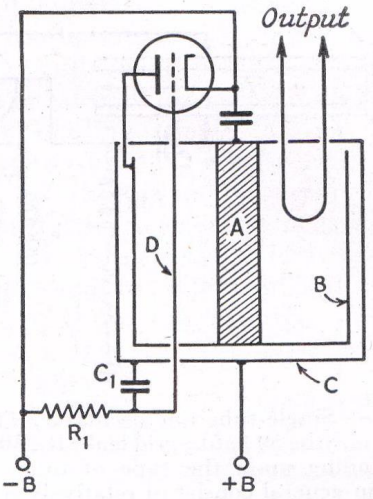

Fig. 431 — High-Q lumped-constant tank circuit in a u.h.f. oscillator. This drawing shows a cross-section of the tank, which is usually built of concentric cylinders. C_1 and R_1 are the grid condenser and leak, respectively; see Fig. 428 for discussion of circuit constants.

The circuit of Fig. 430-A is a t.p.t.g. (§ 3-7) oscillator using the concentric line in the grid circuit for frequency control. An ordinary coil-condenser tank is shown in the plate circuit, but a linear tank may be substituted. The filament inductances have the same function as in the preceding circuits. The ultraudion circuit is shown at B; the same considerations apply. In this case the output is taken from the line inductively by means of the half-turn "hairpin" shown; coupling can be changed to some extent by varying the position of the hairpin. Both circuits may be tuned by means of the small variable condenser C_2, although this condenser may be omitted and the tuning accomplished by changing the line length.

For ease of construction, the concentric line is sometimes modified into a "trough," in which the cross-section of the outer conductor is in the shape of a square "U," one side being left open for tapping and adjustment of the inner conductor. Some radiation takes place with this construction, although not as much as with open lines.

High-Q circuits with lumped constants — To obtain reasonably high effective Q when a low resistance is connected across the tank circuit it is necessary to use a high C/L ratio and a tank of inherently high Q (§ 2-10). At low frequencies the inherent Q of any well-designed circuit will be high enough so that it may be neglected in comparison to the effective Q when loaded, so that no special precautions have to be taken with respect to the resistance of coils and condensers. At ultra-high frequencies these internal resistances are too large to be ignored, and a reduction of the

L/C ratio will not increase the effective Q unless the internal resistance of the tank can be made very small. The reduction in resistance can be brought about by use of large conducting surfaces and elimination of radiation. In such cases the inductance and capacity are generally built as a unit; several arrangements are possible, one being shown in Fig. 431. The tank circuit consists of a rod A (the inductance) inside two concentric cylinders B and C which form a two-plate condenser, one plate being connected to each end of the inductance. The resonant frequency is determined by the length and diameter of A, and the length, diameter and spacing of B and C. The oscillator shown uses the tickler circuit (§ 3-7) with the feedback coil in the grid circuit; this inductance is the wire D in the diagram. Output is taken from the tank circuit by means of the hairpin coupling coil. The tank circuit may also be used in the ultraudion circuit, replacing the concentric line in Fig. 430-B. A variable condenser may be connected across the tank for tuning, if desired, although the Q may be reduced if a considerable portion of the tank r.f. current flows through it.

This type of circuit actually has lumped constants only when the length is small (10% or less) in proportion to the wavelength. At greater lengths it tends to act as a linear circuit, eventually evolving into the concentric line.

CHAPTER FIVE

Radiotelephony

• 5-1 MODULATION

The carrier — The steady radio-frequency power generated by transmitting circuits cannot alone result in the transmission of an intelligible message to a receiving point. It serves only as a "carrier" for the message; the intelligence is conveyed by *modulation* (a change) of the carrier. In radiotelephony this modulation reproduces electrically the sounds it is intended to convey.

Sound and alternating currents — Sounds are caused by vibrations of air particles. The pitch of the sound depends upon the rate of vibration; the more rapid the vibration the higher the pitch. Most sounds consist of complex combinations of vibrations of differing rates or frequencies; the human voice, for instance, generates frequencies from about 100 per second to several thousand per second. The problem of transmitting speech by radio is therefore one of varying the r.f. carrier in a way which corresponds to the air-particle vibrations. The first step in doing this is to change the sound vibrations into alternating electrical currents of the same frequency and relative intensity; the electromechanical device which achieves this translation is the *microphone*. These currents may then be amplified and used to modulate the normally-steady r.f. output of the transmitter.

Methods of modulation — The carrier may be made to vary in accordance with the speech current by using the current to change the phase (§ 2-7) frequency or amplitude of the carrier. *Amplitude modulation* is by far the most common system, and is used exclusively on all frequencies below the ultra-high-frequency region (§ 2-7). *Frequency modulation*, which has special characteristics which make its use desirable under certain conditions, is used to a considerable extent on ultra-high frequencies. *Phase modulation*, which is closely related to frequency modulation, has had little or no direct application in practical communication.

• 5-2 AMPLITUDE MODULATION

Carrier requirements — For proper amplitude modulation, the carrier should be completely free from inherent amplitude variations such as might be caused by insufficient filtering of a rectified-a.c. power supply (§ 8-4). It is also essential that the carrier *frequency* be entirely unaffected by the application of modulation. If modulating the amplitude of the carrier also causes a change in the carrier frequency, the signal wobbles back and forth with the modulation, introducing distortion and widening the channel taken by the signal. This causes unnecessary interference to other transmissions. In practice, this undesirable frequency modulation is prevented by applying the modulation to an r.f. amplifier stage which is isolated from the frequency-controlling oscillator by a "buffer" amplifier. Amplitude modulation of an oscillator is almost always accompanied by frequency modulation. It is permitted on ultra-high frequencies above 112 Mc. because the problem of interference is less acute than on lower frequencies.

Percentage of modulation — In the amplitude-modulation system the audible output at the receiver depends entirely upon the amount of variation — termed *depth of modulation* — in the carrier wave and not upon the strength of the carrier alone. It is therefore desirable to obtain the largest permissible variations in the carrier wave. This condition is reached when the carrier amplitude during modulation is at times reduced to zero and at other times increased to twice its unmodulated value. Such a wave is said to be *fully modulated*, or *100% modulated*. Any desired degree of modulation can be expressed as a percentage, using the unmodulated carrier as a base. Fig. 501 shows at A an unmodulated carrier wave; at B the same wave modulated 50%, and at C the wave with 100% modulation, using a sine-wave (§ 2-7) modulating signal. The outline of the modulated r.f. wave is called the *modulation envelope*.

The percentage modulation can be found by dividing either Y or Z by X and multiplying the result by 100. If the modulating signal is not symmetrical, the larger of the two (Y or Z) should be used.

Power in modulated wave — The amplitude values correspond to current or voltage, so that the drawings may be taken to represent instantaneous values of either. Since power varies as the square of either the current or voltage (so long as the resistance in the circuit is unchanged), at the peak of the modulation up-swing the instantaneous power in the wave

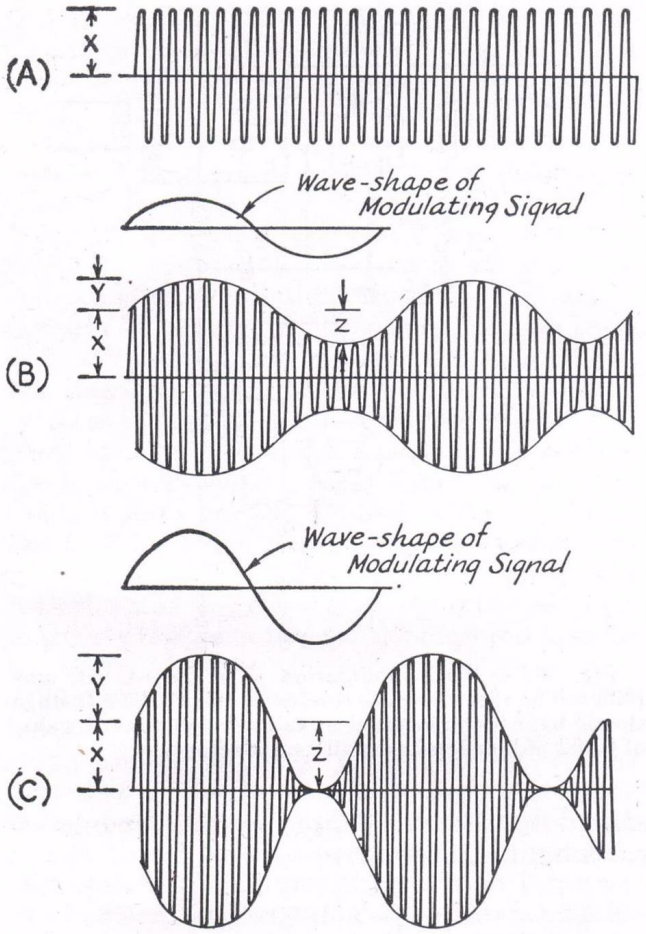

Fig. 501 — Graphical representation of (A) unmodulated carrier wave, (B) wave modulated 50%, (C) wave modulated 100%.

of Fig. 501-C is four times the unmodulated carrier power. At the peak of the down-swing the power is zero since the amplitude is zero. With a sine-wave modulating signal, the *average* power in a 100%-modulated wave is one and one-half times the unmodulated carrier power: that is, the power output of the transmitter increases 50% with 100% modulation.

Linearity — Up to the limit of 100% modulation, the amplitude of the carrier should follow faithfully the amplitude variations of the modulating signal. When the modulated r.f. amplifier is incapable of meeting this condition it is said to be *non-linear*. The amplifier may not, for instance, be capable of quadrupling its power output at the peak of 100% modulation. A non-linear modulated amplifier causes distortion of the modulation envelope.

Modulation characteristic — A graph showing the relationship between r.f. amplitude and instantaneous modulating voltage is called the *modulation characteristic* of the modulated amplifier. This graph should be a straight line (linear) between the limits of zero and twice carrier amplitude. Curvature of the line between these limits indicates non-linearity.

Modulation capability — The *modulation capability* of the transmitter is the maximum percentage of modulation that is possible without objectionable distortion from non-linearity. The maximum capability is, of course, 100%. The modulation capability should be as high as possible so that the most effective signal can be transmitted for a given carrier power.

Overmodulation — If the carrier is modulated more than 100%, a condition such as is shown in Fig. 502 occurs. Not only does the peak amplitude exceed twice the carrier amplitude, but there may actually be a considerable period during which the output is entirely cut off. The modulated wave is therefore distorted (§ 3-3) with the result that harmonics of the audio modulating frequency appear. The carrier should never be modulated more than 100%.

Sidebands — The combining of the audio frequency with the r.f. carrier is essentially a heterodyne process and therefore gives rise to beat frequencies equal to the sum and difference of the a.f. and r.f. frequencies involved (§ 2-13). Therefore, for each audio frequency appearing in the modulating signal two new radio frequencies appear, one equal to the carrier frequency plus the audio frequency, the other equal to the carrier minus the audio frequency. These new frequencies are called *side frequencies*, since they appear on each side of the carrier, and the groups of side frequencies representing a band or group of modulation frequencies are called *sidebands*. Hence a modulated signal occupies a group of radio frequencies, or *channel*, rather than a single frequency as in the case of the unmodulated carrier. The *channel width* is twice the highest modulation frequency. To accommodate the largest number of transmitters in a

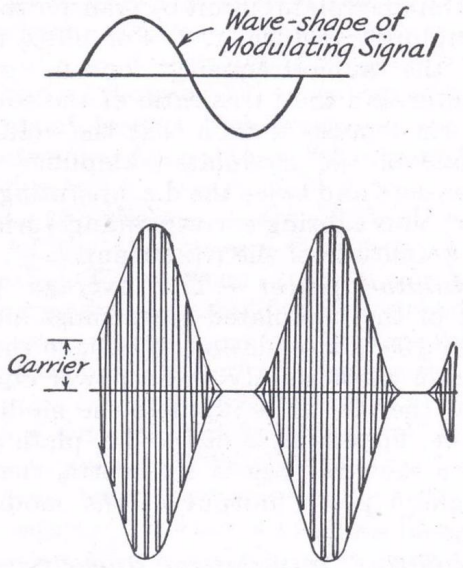

Fig. 502 — An overmodulated wave.

given part of the r.f. spectrum it is apparent that the channel width should be as small as possible, but on the other hand it is necessary, for speech of reasonably good quality, to use modulating frequencies up to about 3000 or 4000 cycles. This calls for a channel width of 6 to 8 kc.

Spurious side bands — Besides the normal side bands required by speech frequencies, unwanted side bands may be generated by the transmitter. These usually lie outside the normally-required channel and hence cause it to be wider without increasing the useful modulation. By increasing the channel width these spurious side bands cause unnecessary interference to other transmitters. The quality of transmission is also adversely affected when spurious side bands are generated.

The chief causes of spurious side bands are harmonic distortion in the audio system, overmodulation, unnecessary frequency modulation, and lack of linearity in the modulated r.f. system.

Types of amplitude modulation — The most widely used type of amplitude modulation system is that in which the modulating signal is applied in the plate circuit of a radio-frequency power amplifier (*plate modulation*). In a second type the audio signal is applied to a control-grid circuit (*grid-bias modulation*). A third system involves variation of both plate voltage and grid bias and is called *cathode modulation.*

• 5-3 PLATE MODULATION

Transformer coupling — In Fig. 503 is shown the most widely-used system of plate modulation. A balanced (push-pull Class-A, Class-AB or Class-B) modulator is transformer-coupled to the plate circuit of the modulated r.f. amplifier. The audio-frequency power generated in the modulator plate circuit is combined with the d.c. power in the modulated-amplifier plate circuit by transfer through the coupling transformer, *T*. For 100% modulation the audio-frequency output of the modulator and the turns ratio of the coupling transformer must be such that the voltage at the plate of the modulated amplifier varies between zero and twice the d.c. operating plate voltage, thus causing corresponding variations in the amplitude of the r.f. output.

Modulator power — The average power output of the modulated stage must increase 50% for 100% modulation (§ 5-2), so that the modulator must supply audio power equal to 50% of the d.c. plate input to the modulated r.f. stage. For example, if the d.c. plate power input to the r.f. stage is 100 watts, the sine-wave audio power output of the modulator must be 50 watts.

Modulating impedance, linearity — The *modulating impedance* or load resistance presented to the modulator by the modulated r.f. amplifier, is equal to

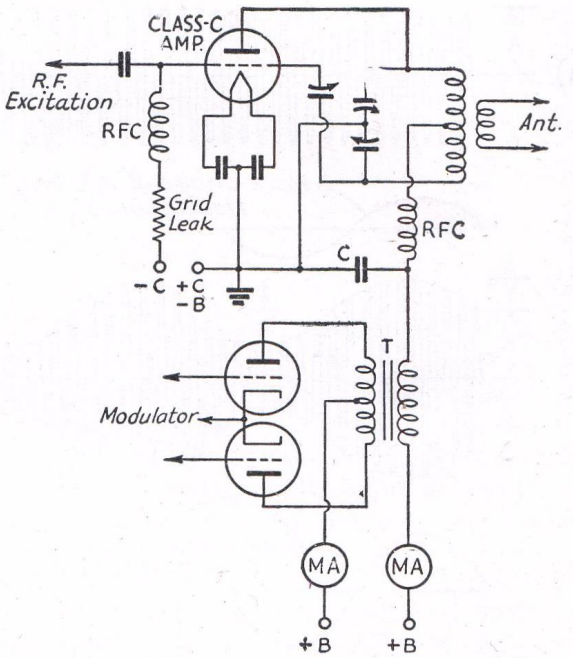

Fig. 503 — Plate modulation of a Class-C r.f. amplifier. The plate by-pass condenser, C, in the r.f. stage should have high reactance at audio frequencies. A value of 0.002 μfd. or less is usually satisfactory.

$$\frac{E_b}{I_p} \times 1000$$

where E_b is the d.c. plate voltage and I_p the d.c. plate current in milliamperes, both measured without modulation.

Since the power output of the r.f. amplifier must vary as the square of the plate voltage (r.f. voltage proportional to applied plate voltage) in order for the modulation to be linear, the amplifier must operate Class-C (§ 3-4). The linearity depends upon having sufficient grid excitation, proper bias, and adjustment of circuit constants to the proper values (§ 4-8).

Power in speech waves — The complex waveform of a speech sound translated into alternating current does not contain as much power, on the average, as there is in a pure tone or sine wave of the same peak (§ 2-7) amplitude. That is, with speech waveforms the ratio of peak to average amplitude is higher than in the sine wave. For this reason, the previous statement that the power output of the transmitter increases 50% with 100% modulation, while true for tone modulation, is not true for speech. On the average, speech waveforms will contain only about half as much power as a sine wave, both having the same peak amplitude. The average power output of the transmitter therefore increases only about 25% with 100% speech modulation. However, the *instantaneous* power output must quadruple on the peak of 100% modulation

(§ 5-2) regardless of the modulating waveform. Therefore the peak capacity of the transmitter must be the same for any type of modulating signal.

Adjustment of plate-modulated amplifiers — The general operating conditions for Class-C operation have been described (§ 3-4, 4–8). The grid bias and grid current required for plate modulation are usually given in the operating data supplied by the tube manufacturer; in general, the bias should be such as to give an operating angle (§ 4-8) of about 120 degrees at carrier plate voltage, and the excitation should be sufficient to maintain the plate efficiency constant when the plate voltage is varied over the range from zero to twice the d.c. plate voltage applied to the amplifier. For best linearity, the grid bias should be obtained partly from a fixed source of about the cut-off value supplemented by grid-leak bias to supply the remainder of the required operating bias.

The maximum permissible d.c. plate power input for 100% modulation is twice the sine-wave audio-frequency power output of the modulator. This input is obtained by varying the loading on the amplifier (keeping its tank circuit tuned to resonance) until the product of d.c. plate voltage and plate current is the desired power. The modulating impedance under these conditions will be the proper value for the modulator if the proper output transformer turn ratio (§ 2-9) is used.

Neutralization, when triodes are used, should be as nearly perfect as possible, since regeneration may cause non-linearity. The amplifier also should be free from parasitic oscillations (§ 4-10).

Although the *effective* value (§ 2-7) of power input increases with modulation, as described above, the *average* plate input to a plate-modulated amplifier does not change, since each increase in plate voltage and plate current is balanced by an equivalent decrease in voltage and current. Consequently the d.c. plate current to a properly-modulated amplifier is constant with or without modulation.

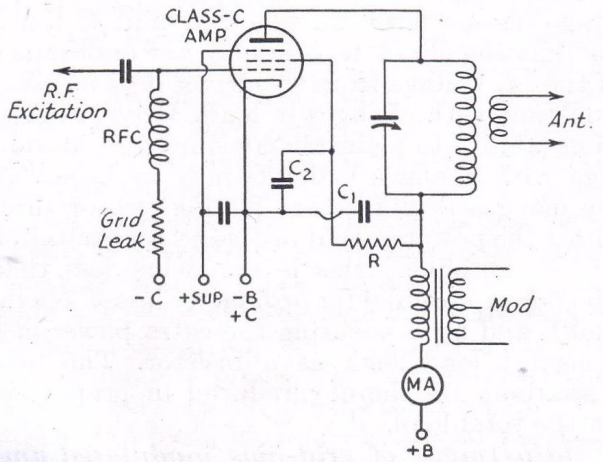

Fig. 504 — Plate and screen modulation of a pentode Class-C r.f. amplifier. Plate and screen by-pass condensers, C_1 and C_2, should have high reactance at audio frequencies (0.002 μfd. or less).

Screen-grid amplifiers — Screen-grid tubes of the pentode or beam tetrode type can be used as Class-C plate-modulated amplifiers provided the modulation is applied to both the plate and screen grid. The method of feeding the screen grid with the necessary d.c. and modulation voltage is shown in Fig. 504. The dropping resistor, *R*, should be of the proper value to apply normal d.c. voltage to the screen under steady carrier conditions. Its value can be calculated by taking the difference between plate and screen voltages and dividing it by the rated screen current.

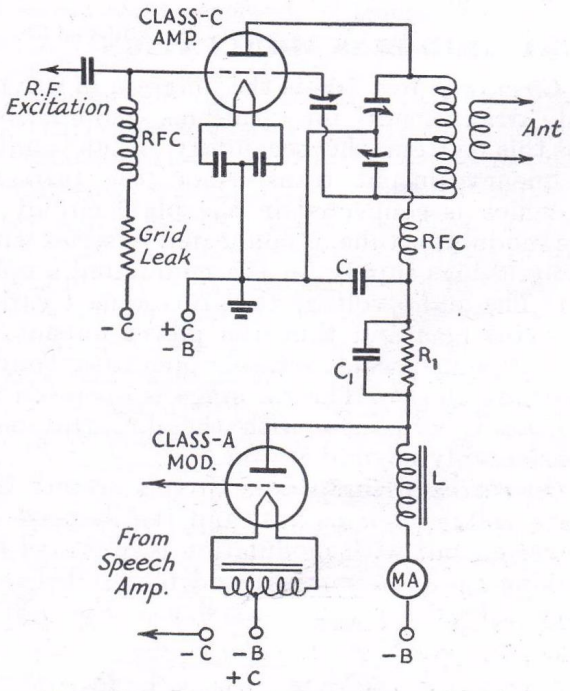

Fig. 505 — Choke-coupled plate modulation.

The modulating impedance is found by dividing the d.c. plate voltage by the sum of the plate and screen currents. The plate voltage multiplied by the sum of the two currents is the power input figure which is used as the basis for determining the audio power required from the modulator.

Choke coupling — In Fig. 505 is shown the circuit of the choke-coupled system of plate modulation. The plate power for the modulator tube and modulated amplifier is furnished from a common source through the modulation choke, *L*, which has high impedance for audio frequencies. The modulator operates as a power amplifier with the plate circuit of the r.f. amplifier as its load, the audio output of the modulator being superimposed on the d.c. power supplied to the amplifier. For 100% modulation the audio voltage applied to the r.f. amplifier plate circuit across the choke, *L*,

must have a peak value equal to the d.c. voltage on the modulated amplifier. To obtain this without distortion, the r.f. amplifier must be operated at a d.c. plate voltage less than the modulator plate voltage, the extent of the voltage difference being determined by the type of modulator tube used. The necessary drop in voltage is provided by the resistor R_1, which is by-passed for audio frequencies by the condenser C_1.

This type of modulation is seldom used except in very low-power portable sets, because a single-tube Class-A (§ 3-4) modulator is required. The output of a Class-A modulator is very low compared to that obtainable from a pair of tubes of the same size operated Class-B, hence only a small amount of r.f. power can be modulated.

• 5-4 GRID-BIAS MODULATION

Circuit — Fig. 506 is the diagram of a typical arrangement for grid-bias modulation. In this system the secondary of an audio-frequency output transformer, the primary of which is connected in the plate circuit of the modulator tube, is connected in series with the grid-bias supply for the modulated amplifier. The audio voltage thus introduced varies the grid bias and thus the power output of the r.f. stage, when suitable operating conditions are chosen. The r.f. stage is operated as a Class-C amplifier, with the d.c. grid bias considerably beyond cut-off.

Operating principles — In this system the plate voltage is constant, and the increase in power output with modulation is obtained by making the plate current and plate efficiency vary with the modulating signal. For 100% modulation, both plate current and efficiency must, at the peak of the modulation up-swing, be twice their carrier values so that the peak power will be four times the carrier power. Since the peak efficiency in practicable circuits is of the order of 70% to 80%, the carrier efficiency ordinarily cannot exceed about 35% to 40%. For a given size of r.f. tube the carrier output is about one-fourth the carrier obtainable from the same tube plate-modulated. The grid bias, r.f. excitation, plate loading and audio voltage in series with the grid must be adjusted to give a linear modulation characteristic.

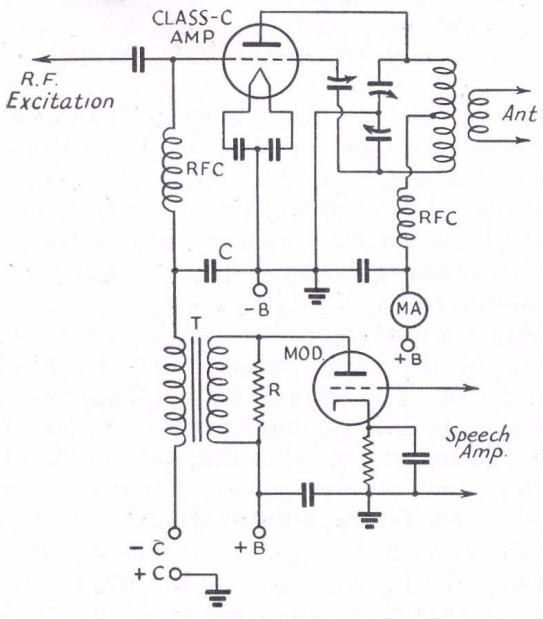

Fig. 506 — Grid-bias modulation of a Class-C amplifier. The r.f. grid by-pass condenser, C, should have high reactance at audio frequencies (0.002 μfd. or less in usual cases).

Modulator power — Since the increase in average carrier power with modulation is secured by varying the plate efficiency and d.c. plate input of the amplifier, the modulator need only supply such power losses as may be occasioned by connecting it in the grid circuit. These are quite small, hence a modulator capable of only a few watts output will suffice for transmitters of considerable power. The load on the modulator varies over the audio-frequency cycle as the rectified grid current of the modulated amplifier changes, hence the modulator should have good voltage regulation (§ 5-6).

Grid-bias source — The change in bias voltage with modulation causes the rectified grid current of the amplifier also to vary, the r.f. excitation being fixed. If the bias source has appreciable resistance, the change in grid current also will cause a change in bias in a direction opposite to that caused by the modulation. It is therefore necessary to use a grid-bias source having low resistance so that these bias variations will be negligible. Battery bias is satisfactory. If a rectified a.c. bias supply is used the type having regulated output (§ 8-9) should be used. Grid-leak bias for a grid-modulated amplifier is unsatisfactory and its use should not be attempted.

Driver regulation — The load on the driving stage varies with modulation, and a linear modulation characteristic may not be obtained if the r.f. voltage from the driver does not stay constant with changes in load. Driver regulation (ability to maintain constant output voltage with changes in load) may be improved by using a driving stage having two or three times the power output necessary for excitation of the amplifier (this is somewhat less than the power required for ordinary Class-C operation), and by dissipating the extra power in a constant load such as a resistor. The load variations are thereby reduced in proportion to the total load.

Adjustment of grid-bias modulated amplifiers — This type of amplifier should be adjusted with the aid of an oscilloscope to obtain optimum operating conditions. The

oscilloscope should be connected as described in § 5-10, the wedge pattern being preferable. A tone source for modulating the transmitter will be convenient. The fixed grid bias should be two or three times the cut-off value (§ 3-2). The d.c. input to the amplifier, assuming 33% carrier efficiency, will be 1½ times the plate dissipation rating of the tube or tubes used in the modulated stage, and the plate current for this input (in milliamperes, $1000P/E$, where P is the power and E the d.c. plate voltage) determined. Apply r.f. excitation and, without modulation, adjust the plate loading (keeping the plate tank circuit tuned to resonance) to give the required plate current. Next, apply modulation and increase in the modulating signal until the modulation characteristic shows curvature (§ 5-10). This will probably occur well below 100% modulation, indicating that the plate efficiency is too high. Increase the plate loading and reduce the excitation to maintain the same plate current, apply modulation and check the characteristic again. Continue this process until the characteristic is linear from the axis to twice the carrier amplitude. It is advantageous to use the maximum permissible plate voltage on the tube, since it is usually easier to obtain a more linear characteristic with high plate voltage and low current (carrier conditions) rather than with relatively low plate voltage and high plate current.

The amplifier can be adjusted without an oscilloscope by determining the plate current as described above, then setting the bias to the cut-off value (or slightly beyond) for the d.c. plate voltage used and applying maximum excitation. Adjust the plate loading, keeping the tank circuit at resonance, until the amplifier draws twice the carrier plate current, and note the antenna current. Decrease the excitation until the output and plate current just start to drop, then increase the bias, leaving the excitation and plate loading unchanged, until the plate current drops to the proper carrier value. The antenna current should be just half the previous value; if it is larger, try somewhat more loading and less excitation; if smaller, less loading and more excitation. Repeat until the antenna current drops to half its maximum value when the plate current is biased down to the carrier value. Under these conditions the amplifier should modulate properly, provided the plate supply has good voltage regulation (§ 8-1) so that the plate voltage is practically the same at both values of plate current during the initial testing.

The d.c. plate current should be substantially constant with or without modulation (§ 5-3).

Suppressor modulation — The circuit arrangement for suppressor-grid modulation of a pentode tube is shown in Fig. 507. The operating principles are the same as for grid-bias modulation. However, the r.f. excitation and modulating signals are applied to separate grids, which gives the system a simpler operating technique, since best adjustment for proper excitation requirements and proper modulating circuit requirements are more or less independent. The carrier plate efficiency is approximately the same as for grid-bias modulation, and the modulator power requirements are similarly small. With tubes having suitable suppressor-grid characteristics, linear modulation up to practically 100% can be obtained with negligible distortion.

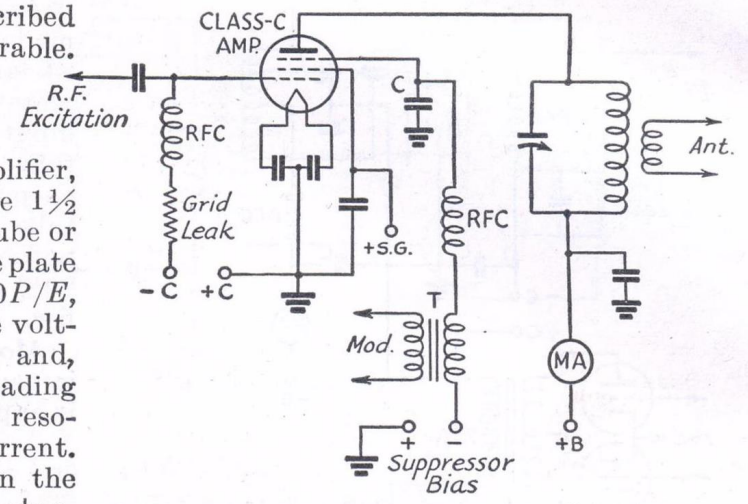

Fig. 507 — **Suppressor-grid modulation of a pentode r.f. amplifier. The suppressor r.f. by-pass condenser, C, should be 0.002 μfd. or less.**

The method of adjustment is essentially the same as that described in the preceding paragraph. Apply normal excitation and bias to the control grid and, with the suppressor bias at zero or the positive value recommended for c.w. telegraph operation with the particular tube used, adjust the plate loading to obtain twice the carrier plate current (on the basis of 33% carrier efficiency). Then apply sufficient negative bias to the suppressor to bring the plate current to the carrier value, leaving the loading unchanged. Simultaneously, the antenna current also should drop to half its maximum value. The amplifier is then ready for modulation. Should the plate current not follow the antenna current in the same proportion when the suppressor bias is made negative, the loading and excitation should be readjusted to make them coincide.

• 5-5 CATHODE MODULATION

Circuit — The fundamental circuit for cathode or "center-tap" modulation is shown in Fig. 508. This type of modulation is a combination of the plate- and grid-bias methods, and permits a carrier efficiency midway between the two. The audio power is introduced

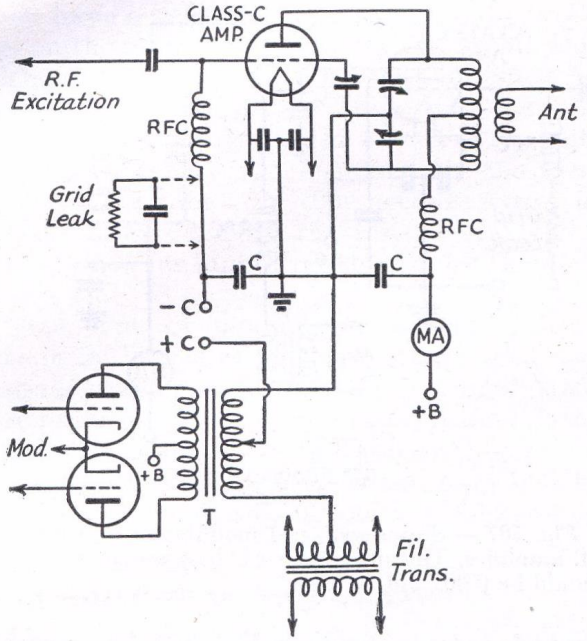

Fig. 508 — Cathode modulation of a Class-C r.f. amplifier. The grid and plate by-pass condensers, C, should be 0.002 μfd. or less (high reactance at audio frequencies).

in the cathode circuit, and both grid bias and plate voltage vary during modulation.

The cathode circuit of the modulated stage must be independent of other stages in the transmitter; that is, when filament-type tubes are modulated they must be supplied from a separate filament transformer. The filament by-pass condensers should not be larger than about 0.002 μfd., to avoid by-passing the audio.

Operating principles — Because part of the modulation is by the grid-bias method, the plate efficiency of the modulated amplifier must vary during modulation. The carrier efficiency therefore must be lower than the efficiency at the modulation peak. The required reduction in carrier efficiency depends upon the proportion of grid modulation to plate modulation; the higher the percentage of plate modulation the higher the permissible carrier efficiency, and vice versa. The audio power required from the modulator also varies with the percentage of plate modulation, being greater as this percentage is increased.

The way in which the various quantities vary is illustrated by the curves of Fig. 509. In these curves, the performance of the cathode-modulated r.f. amplifier is plotted in terms of the tube ratings for plate-modulated telephony, with the percentage of plate modulation as a base. As the percentage of plate modulation is decreased, it is assumed that the grid-bias modulation is increased to make the overall percentage of modulation reach 100%. The limiting condition, 100% plate modulation and no grid-bias modulation, is at the right (A); pure grid-bias modulation is represented by the left-hand ordinate (B and C).

As an example, assume that 40% plate modulation is to be used. Then the modulated r.f. amplifier must be adjusted for a carrier plate efficiency of 56%, the permissible plate input will be 65% of the ratings of the same tube with pure plate modulation, the power output will be 48% of the rated output of the tube with plate modulation, and the audio power required from the modulator will be 20% of the d.c. input to the modulated amplifier.

Modulating impedance — The modulating impedance of a cathode-modulated amplifier is approximately equal to

$$m\frac{E_b}{I_b}$$

where m is the percentage of plate modulation expressed as a decimal, E_b is the plate voltage, and I_b the plate current of the modulated r.f. amplifier. This figure for the modulating impedance is used in the same way as the corresponding figure for pure plate modulation in determining the proper modulator operating conditions (§ 5-6).

Conditions for linearity — R.f. excitation requirements for the cathode-modulated amplifier are midway between those for plate modulation and grid-bias modulation. More excitation is required as the percentage of plate modulation is increased. Grid bias should be considerably beyond cut-off; fixed bias from a supply having good voltage regulation (§ 8-9) is preferred, especially when the percentage of plate modulation is small and the amplifier is operating more nearly like a grid-bias modulated stage. At the higher percent-

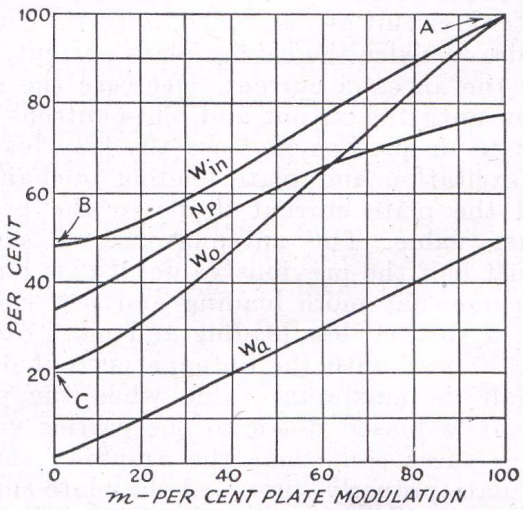

Fig. 509 — Cathode modulation performance curves, in terms of percentage of plate modulation against per cent of Class-C telephony tube ratings.

W_{in} — D.c. plate input watts in per cent of plate-modulation rating.
W_o — Carrier output watts in per cent of plate-modulation rating (based on plate efficiency of 77.5%).
W_a — Audio power in per cent of d.c. watts input.
N_p — Plate efficiency in per cent.

ages of plate modulation a combination of fixed and grid-leak bias can be used since the variation in rectified grid current is smaller. The grid-leak should be by-passed for audio frequencies. The percentage of grid modulation may be regulated by choice of a suitable tap on the modulation transformer secondary.

Adjustment of cathode-modulated amplifiers — In most respects the adjustment procedure is similar to that for grid-bias modulation (§ 5-4). The critical adjustments are those of antenna loading, grid bias, and excitation. The proportion of grid-bias to plate modulation will determine the operating conditions.

Adjustments should be made with the aid of an oscilloscope (§ 5-10). With proper antenna loading and excitation, the normal wedge-shaped pattern will be obtained at 100% modulation. As in the case of grid-bias modulation too-light antenna loading will cause flattening of the up-peaks of modulation (downward modulation), as will also too-high excitation (§ 5-10). The cathode current will be practically constant with or without modulation when the proper operating conditions are reached (§ 5-3).

• 5-6 CLASS-B MODULATORS

Modulator tubes — In the case of plate modulation, the relatively-large audio power needed (§ 5-3) practically dictates the use of a Class-B (§ 3-4) modulator, since the power can be obtained most economically with this type of amplifier. A typical circuit is given in Fig. 510. A pair of tubes must be chosen which is capable of delivering sine-wave audio power equal to half the d.c. input to the modulated Class-C amplifier. It is sometimes convenient to use tubes which will operate at the same plate voltage as that applied to the Class-C stage, since one power supply of adequate current capacity may then suffice for both stages. Available components do not always permit this, however, and better overall performance and economy may frequently result from the use of separate power supplies.

Matching to load — In giving Class-B ratings on power tubes, manufacturers specify the plate-to-plate load impedance (§ 3-3) into which the tubes must operate to deliver the rated audio power output. This load impedance seldom is the same as the modulating impedance (§ 5-3) of the Class-C r.f. stage, so that a match must be brought about by adjusting the turn ratio of the coupling transformer. The required turn ratio, primary to secondary, is

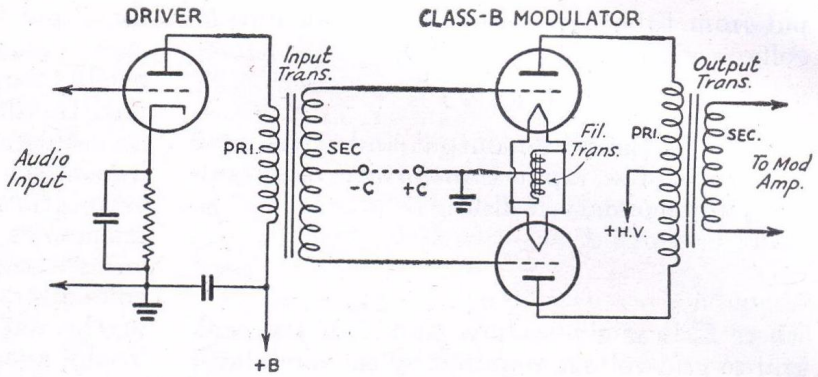

Fig. 510 — Class-B modulator and driver circuit.

$$\sqrt{\frac{Z_p}{Z_m}}$$

where Z_m is the Class-C modulating impedance and Z_p is the plate-to-plate load impedance specified for the Class-B tubes.

Commercial Class-B output transformers usually are rated to work between specified primary and secondary impedances and are designed for specific Class-B tubes. In such a case the turn ratio can be found by substituting the given impedances in the formula above. Many transformers are provided with primary and secondary taps so that various turn ratios can be obtained to meet the requirements of a large number of tube combinations.

Driving power — Class-B amplifiers are driven into the grid-current region, so that power is consumed in the grid circuit (§ 3-3). The preceding stage (*driver*) must be capable of supplying this power at the required peak audio-frequency grid-to-grid voltage. Both these quantities are given in the manufacturer's tube ratings. The grids of the Class-B tubes represent a variable load resistance over the audio-frequency cycle, since the grid current does not increase directly with the grid voltage. To prevent distortion, therefore, it is necessary to have a driving source which has good *regulation* — that is, which will maintain the waveform of the signal without distortion even though the load varies. This can be brought about by using a driver capable of delivering two or three times the actual power consumed by the Class-B grids, and by using an input coupling transformer having a turn ratio giving the largest step-down in voltage, between the driver plate or plates and Class-B grids, that will permit obtaining the specified grid-to-grid a.f. voltage.

Driver coupling — A Class-A or Class-AB (§ 3-4) driver is used to excite a Class-B stage. Tubes for the driver preferably should be triodes having low plate resistance, since these will have the best regulation. Having chosen a tube or tubes with ample power out-

put from tube data sheets, the peak output voltage will be, approximately,

$$E_o = 1.4 \sqrt{PR}$$

where P is the power output and R the load resistance. The input transformer ratio, primary to secondary, will be

$$\frac{E_o}{E_g}$$

where E_o is as given above and E_g is the peak grid-to-grid voltage required by the modulator tubes.

Commercial transformers usually are designed for specific driver-modulator combinations, and usually are adjusted to give as good driver regulation as the conditions will permit.

Grid bias — Modern Class-B audio tubes are intended for operation without fixed bias. This lessens the variable grid-circuit loading effect and eliminates the need for a grid-bias supply.

When a grid-bias supply is required, it must have low internal resistance so that the flow of grid current with excitation of the Class-B tubes does not cause a continual shift in the actual grid bias and thus cause distortion. Batteries or a regulated bias supply (§ 8-9) should be used.

Plate supply — The plate supply for a Class-B modulator should be sufficiently well filtered (§ 8-3) to prevent hum modulation of the r.f. stage (§ 5-2). An additional requirement is that the output condenser of the supply should have low reactance (§ 2-8) at 100 cycles or less compared to the load into which each tube is working, which is ¼ the plate-to-plate load resistance. A 4-μfd. output condenser with a 1000-volt supply, or a 2-μfd. condenser with a 2000-volt supply, usually will be satisfactory. With other plate voltages, condenser values should be in inverse proportion to the plate voltage.

Overexcitation — When a Class-B amplifier is overdriven in an attempt to secure more than the rated power, distortion in the output waveshape increases rapidly. The high-frequency harmonics which result from the distortion (§ 3-3) modulate the transmitter, producing spurious sidebands (§ 5-2) which readily can cause serious interference over a band of frequencies several times the channel width required for speech. This may happen even though the transmitter is not being overmodulated, as in the case where the modulator is incapable of delivering the power required to modulate the transmitter fully, or when the Class-C amplifier is not adjusted to give the proper modulating impedance (§ 5-3).

The tubes used in the Class-B modulator should be capable of somewhat more than the power output nominally required (50% of the d.c. input to the modulated amplifier) to take care of losses in the output transformer. These usually run from 10% to 20% of the tube output. In addition, the Class-C amplifier should be adjusted to give the proper modulating impedance and the correct output transformer turn ratio should be used. Such high-frequency harmonics as may be generated in these circumstances can be reduced by connecting condensers across the primary and secondary of the output transformer (about 0.002 μfd. in the average case) to form, with the transformer leakage inductance (§ 2-9) a low pass filter (§ 2-11) which cuts off just above the maximum audio frequency required for speech transmission (about 4000 cycles). The condenser voltage ratings should be adequate for the peak a.f. voltages appearing across them.

Operation without load — Excitation should never be applied to a Class-B modulator until after the Class-C amplifier is turned on and is drawing the proper plate current to present the rated load to the modulator. With no load to absorb the power, the primary impedance of the transformer rises to a high value and excessive audio voltages are developed across it — frequently high enough to break down the transformer insulation. If the modulator is to be tested separately from the transmitter a load resistance of the same value as the modulating impedance, and capable of dissipating the full power output of the modulator, should be connected across the transformer secondary.

• 5-7 LOW-LEVEL MODULATORS

Selection of tubes — Modulators for grid-bias and suppressor modulation usually can be small audio power output tubes, since the audio power required is quite small. A triode such as the 2A3 is preferable because of its low plate resistance, but pentodes will work satisfactorily.

Matching to load — Since the ordinary Class-A receiving power tube will develop about 200 to 250 peak volts in its plate circuit, which is ample for most low-level modulator applications, a 1:1 coupling transformer is generally used. If more voltage is required, a step-up ratio must be provided in the transformer. It is usual practice to load the primary of the output coupling transformer with a resistance equal to or slightly higher than the rated load resistance for the tube in order to stabilize the voltage output and thus improve the regulation. This is indicated in Figs. 506 and 507.

• 5-8 MICROPHONES

Sensitivity — The *sensitivity* of a microphone is its electrical output for a given speech intensity input. Sensitivity varies greatly with

microphones of different basic types, and also varies between different models of the same type. The output is also greatly dependent on the character of the individual voice and the distance of the speaker's lips from the microphone, decreasing approximately as the square of the distance. It also may be affected by reverberation in the room. Hence, only approximate values based on averages of "normal" speaking voices can be attempted. The values given in the following paragraphs are based on close talking; that is, with the microphone six inches or less from the speaker's lips.

Frequency response — The *frequency response* of a microphone is its relative ability to convert sounds of different frequencies into alternating current. With fixed sound intensity at the microphone, the electrical output may vary considerably as the sound frequency is varied. For intelligible speech transmission only a limited frequency range is necessary, and natural-sounding speech can be obtained if the output of the microphone does not vary more than a few decibels (§ 3-3) over a range of about 100 cycles to 3000 or 4000 cycles. When the variation in decibels is small between two frequency limits, the microphone is said to be *flat* between those limits.

Carbon microphones — Fig. 511 shows connections for single- and double-button carbon microphones, with a variable potentiometer included in each circuit for adjusting the button current to the correct value as specified with each microphone. The single-button microphone consists of a metal diaphragm placed against an insulating cup containing loosely-packed carbon granules (*microphone button*). Current from a battery flows through the granules, the diaphragm being one connection and the metal back-plate the other. The primary of a transformer is connected in series with the battery and microphone. As the diaphragm vibrates its pressure on the granules alternately increases and decreases, causing a corresponding increase and decrease of current flow through the circuit, since the pressure changes the resistance of the mass of granules. The change in current flowing through the transformer primary causes an alternating voltage, of corresponding frequency and intensity, to be set up in the transformer secondary (§ 2-9). The double-button type operates similarly, but with two buttons in push-pull.

Good quality single-button carbon microphones give outputs ranging from 0.1 to 0.3 volt across 50 to 100 ohms; that is, across the primary winding of the microphone transformer. With the step-up of the transformer, a peak voltage of between 3 and 10 volts across 100,000 ohms or so can be assumed available at the grid of the first tube. These microphones are usually operated with a button current of 50 to 100 ma.

The sensitivity of good-quality double-button microphones is considerably less, ranging from 0.02 volt to 0.07 volt across 200 ohms. With this type microphone and the usual push-pull input transformer, a peak voltage of 0.4 to 0.5 volt across 100,000 ohms or so can be assumed available at the first speech amplifier grid. The button current with this type microphone ranges from 5 to 50 ma. per button.

Crystal microphones — The input circuit for a piezo-electric or crystal type microphone is shown in Fig. 511-E. The element in this type consists of a pair of Rochelle salts crystals cemented together, with plated electrodes. In the more sensitive types the crystal is mechanically coupled to a diaphragm. Sound waves actuating the diaphragm cause the crystal to vibrate mechanically and, by piezo-electric action (§ 2-10), to generate a corresponding alternating voltage between the electrodes, which are connected to the grid circuit of a vacuum tube amplifier as shown. The crystal type requires no separate source of current or voltage.

Although the sensitivity of crystal microphones varies with different models, an output

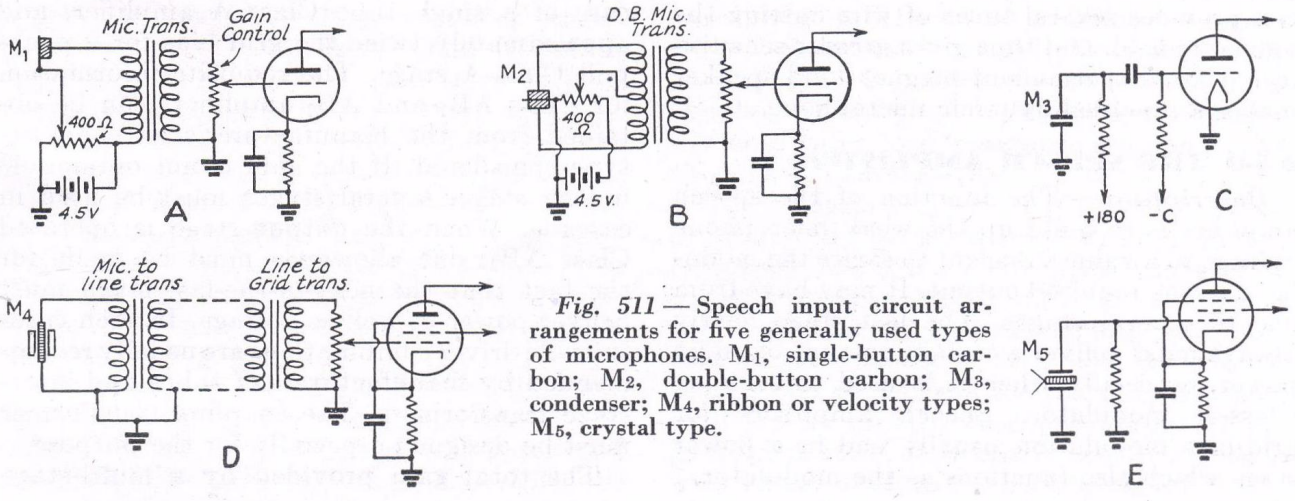

Fig. 511 — Speech input circuit arrangements for five generally used types of microphones. M_1, single-button carbon; M_2, double-button carbon; M_3, condenser; M_4, ribbon or velocity types; M_5, crystal type.

of 0.01 to 0.03 volt is representative for communication types. The sensitivity is affected by the length of the cable connecting to the first amplifier stage; the above figure is for lengths of 6 or 7 feet. The frequency characteristic is unaffected by the cable but the load resistance (amplifier grid resistor) does affect it, the lower frequencies being attenuated as the shunt resistance becomes less. Grid resistor values of 1 megohm and higher should be used, 5 megohms being a customary figure.

Condenser microphones — The condenser microphone of Fig. 511-C consists of a two-plate capacity with one plate stationary and the other, separated from the first by about a thousandth of an inch, a thin metal membrane serving as a diaphragm. This condenser is connected in series with a resistor and d.c. voltage source. When the diaphragm vibrates the change in capacity causes a small charging current to flow through the circuit. The resulting audio voltage which appears across the resistor is fed to the tube grid through the coupling condenser.

The output of condenser microphones varies with different models, the high-quality type being about one-hundredth to one-fiftieth as sensitive as the double-button carbon microphone. The first amplifier tube must be built into the microphone since the capacity of a connecting cable would impair both output and frequency range.

Velocity and dynamic microphones — In a velocity or ribbon microphone, the element acted upon by the sound waves is a thin corrugated metallic ribbon suspended between the poles of a magnet. When made to vibrate the ribbon cuts the lines of force between the poles in first one direction and then the other, thus generating an alternating voltage.

The sensitivity of the velocity microphone, with a suitable coupling transformer, is about 0.03 to 0.05 volt.

The dynamic microphone is similar to the ribbon type in principle, but the ribbon is replaced by a coil attached to a diaphragm. The coil provides several turns of wire cutting the magnetic field, and thus gives greater sensitivity. A small permanent-magnet loud-speaker makes a practical dynamic microphone.

• 5-9 THE SPEECH AMPLIFIER

Description — The function of the speech amplifier is to build up the weak microphone voltage to a value sufficient to excite the modulator to the required output. It may have from one to several stages. The last stage nearly always must deliver a certain amount of audio power, especially when it is used to excite a Class-B modulator. Speech amplifiers for grid-bias modulation usually end in a power stage which also functions as the modulator.

The speech amplifier is frequently built as a separate unit from the modulator, and in such a case may be provided with a step-down transformer designed to work into a low impedance, such as 200 or 500 ohms (tube-to-line transformer). When this is done, a step-up input transformer intended to work between the same impedance and the modulator grids (line-to-grid transformer) is provided in the modulator circuit. The line connecting the two transformers may be made any convenient length.

General design considerations — The last stage of the speech amplifier must be selected on the basis of the power output required from it; for instance, the power necessary to drive a Class-B modulator (§ 5-6). It may be either single-ended or push-pull (§ 3-3) the latter being generally preferable because of higher power output and lower harmonic distortion. Push-pull amplifiers may be either Class A, Class AB_1 or Class AB_2 (§ 3-4) as the power requirements dictate. If a Class A or AB_1 amplifier is used, the preceding stages may all be voltage amplifiers, but when a Class-AB_2 amplifier is used the stage immediately preceding it must be capable of furnishing the power consumed by its grids at full output. The requirements in this case are much the same as those which must be met by a driver for a Class-B stage (§ 5-6), but the actual power needed is considerably smaller and usually can be supplied by one or two small receiving triodes. Any lower-level stages are invariably worked as purely voltage amplifiers.

The minimum amplification which must be provided ahead of the last stage is equal to the peak audio-frequency grid voltage required by the last stage for full output (peak grid-to-grid-voltage in the case of a push-pull stage) divided by the output voltage of the microphone or secondary of the microphone transformer if one is used (§ 5-8). The peak a.f. grid voltage required by the output tube or tubes is equal to the d.c. grid bias in the case of a single-tube Class A amplifier, and approximately twice the grid bias for a push-pull Class-A stage. The requisite information for Class AB_1 and AB_2 amplifiers can be obtained from the manufacturer's data on the type considered. If the gain is not obtainable in one stage, several stages must be used in cascade. When the output stage is operated Class AB_2, due allowance must be made for the fact that the next-to-the-last stage must deliver power as well as voltage. In such cases suitable driver combinations are usually recommended by manufacturers of tubes and interstage transformers. The coupling transformer must be designed especially for the purpose.

The total gain provided by a multi-stage

amplifier is equal to the product of the individual stage gains. For example, when three stages are used, the first having a gain of 100, the second 20 and the third 15, the total gain is 100 × 20 × 15, or 30,000. It is good practice to provide two or three times the minimum required gain in designing the speech amplifier. This will insure having ample gain available to cope with varying conditions.

When the gain must be fairly high, as when a crystal microphone is used, the speech amplifier frequently has four stages, including the power output stage. The first is generally a pentode because of the high gain attainable with this type of tube. The second and third stages are usually triodes, the third frequently having two tubes in push-pull when it drives a Class AB_2 output stage. Two pentode stages are seldom used consecutively because of the difficulty of getting stable operation when the gain per stage is high. With carbon microphones less amplification is needed, hence the pentode first stage usually is omitted, one or two triode stages being ample to obtain full output from the power stage.

Stage gain and voltage output — In voltage amplifiers, the *stage gain* is the ratio of a.c. output voltage to a.c. voltage applied to the grid. It will vary with the applied audio frequency, but for speech work the variation should be small over the range 100–4000 cycles. This condition is easily met in practice.

The output voltage is the maximum value which can be taken from the plate circuit without distortion. It is usually expressed in terms of the peak value of the a.c. wave (§ 2-7) since this value is independent of the waveform. The peak output voltage usually is of interest only when the stage drives a power amplifier, since only in this case is the stage called upon to work near its maximum capabilities. Low-level stages are very seldom worked near full capacity, hence harmonic distortion is negligible and the voltage gain of the stage is the primary consideration.

Resistance coupling — Resistance coupling is generally used in voltage amplifier stages. It is relatively inexpensive, good frequency response can be secured, and there is little danger of hum pick-up from stray magnetic fields associated with heater wiring. It is the only type of coupling suitable for the output circuits of pentodes and high-μ triodes, since with audio-frequency transformers a sufficiently high load impedance (§ 3-3) cannot be obtained without considerable frequency distortion. Typical resistance-coupled circuits are given in Fig. 512.

The frequency response of the amplifier will be determined by the circuit constants, particularly C_3R_4, the coupling condenser and resistor to the following stage, and C_1R_1, the

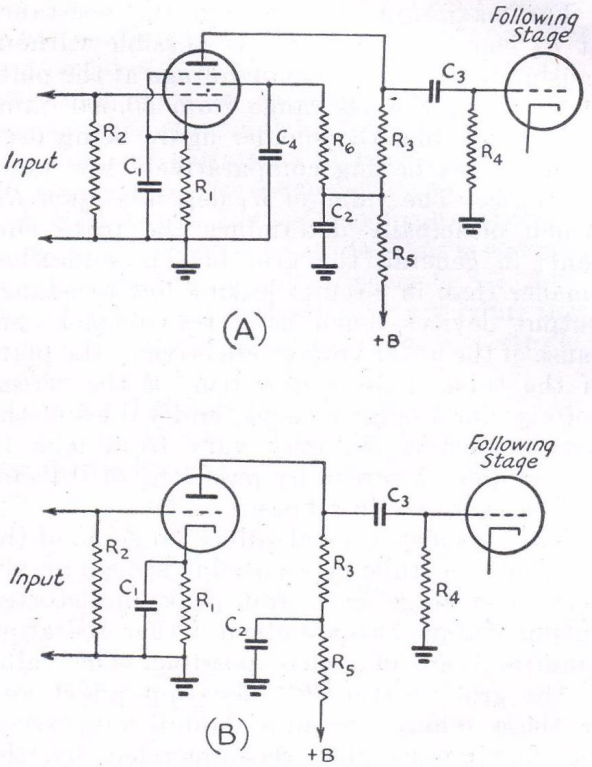

Fig. 512 — Resistance-coupled voltage amplifier circuits. A, pentode; B, triode. Designations are as follows:
C_1 — Cathode by-pass condenser.
C_2 — Plate by-pass condenser.
C_3 — Output coupling condenser (blocking condenser).
C_4 — Screen by-pass condenser.
R_1 — Cathode resistor.
R_2 — Grid resistor.
R_3 — Plate resistor.
R_4 — Next-stage grid resistor.
R_5 — Plate decoupling resistor.
R_6 — Screen resistor.
Values for commonly-used tubes are given in Table I.

cathode bias resistor and by-pass condenser. For adequate amplification at low frequencies the time constant (§ 2-6) of both these CR combinations should be large. Depending upon the type of tube used in the next stage, R_4 may vary from 50,000 ohms (with power tubes such as the 2A3 or 6F6) to 1 megohm; it is advantageous to use the highest value recommended for the type of tube used since this gives greatest low-frequency response with a given size of coupling condenser, C_3. A capacity of 0.1 μfd. at C_3 will provide ample coupling at low frequencies with any ordinarily-used tube, load resistance (R_3) and next-stage grid resistance (R_4).

The reactance (§ 2-8) of C_1 must be small compared to the resistance of R_1 for good low-frequency response. While with values of R_1 in the vicinity of 10,000 ohms, more or less, a condenser of 1 μfd. will suffice, it is more common practice to use 5- or 10-μfd. low-voltage electrolytic condensers for the purpose, since they are inexpensive and provide ample bypassing. A value of 10 μfd. is usually sufficient with values of R_1 as low as 500 ohms.

For maximum voltage gain the resistance at R_3 should be as high as possible without causing too great a drop in voltage at the plate of the tube. Values range from 50,000 ohms to 0.5 megohm, the smaller figure being used with triodes having comparatively low plate resistance. The value of R_1 depends upon R_3, which principally determines the plate current; in general, the grid bias is somewhat smaller than in circuits having low-resistance output devices (such as a transformer) because of the lower voltage effective at the plate of the tube. This is also true of the screen voltage, for similar reasons, and values of the screen resistor, R_6, may vary from 0.25 to 2 megohms. A screen by-pass (C_4) of 0.1 μfd. will be adequate in all cases.

Table I shows typical values for some of the more popular tube types used in speech amplifiers. The stage gain and peak undistorted output voltage also are given. Other operating conditions are of course possible. The value of the grid resistor, R_2, does not affect any of these quantities, but should not exceed the maximum value recommended by the manufacturer for the particular type of tube used.

The resistance-capacity filter (§ 2-11) formed by C_2R_5 is called a *decoupling circuit*. It isolates the stage from the power supply so that unwanted coupling between this and other stages through the output impedance of the power supply is eliminated. Such coupling is a frequent cause of low-frequency oscillation (*motorboating*) in multistage resistance-coupled amplifiers.

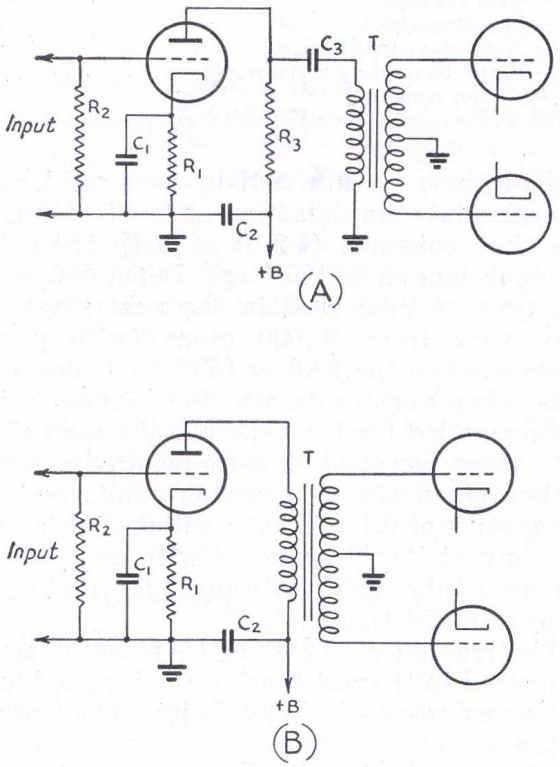

Fig. 513 — Transformer-coupled amplifier circuits for driving a push-pull amplifier. *A*, resistance-transformer coupling; *B*, transformer coupling. Designations correspond to those of Fig. 512. In *A*, values can be taken from Table I. In *B*, the cathode resistor is calculated from the rated plate current and grid bias as given for the particular type of tube used (§ 3-6).

Transformer coupling — Transformer coupling between stages is ordinarily used only when power is to be transferred (in such a case resistance coupling is very inefficient) or when it is necessary to couple between a single-ended and a push-pull stage. Triodes having an amplification factor of 20 or less are used in transformer-coupled voltage amplifiers.

Representative circuits for single-ended to push-pull are shown in Fig. 513. That at A uses a combination of resistance and transformer coupling and may be used for exciting the grids of a Class-A or AB_1 following stage. The resistance coupling is used to keep the d.c. plate current from flowing through the transformer primary and thereby prevent a reduction in primary inductance below its no-current value (§ 8-4). This improves the low-frequency response. With triodes ordinarily used (6C5, 6J5, etc.) the gain is equal to that with resistance coupling (typical values in Table I) multiplied by the secondary-to-primary turn ratio of the transformer. This ratio is generally 2:1

In B the transformer primary is in series with the plate of the tube and thus must carry the tube plate current. When the following amplifier operates without grid current, the voltage gain of the stage is practically equal to the μ of the tube multiplied by the transformer ratio. This circuit is also suitable for transferring power (within the capabilities of the tube) as in the case of a following Class-AB_2 stage used as a driver for a Class-B modulator.

Gain control — The overall gain of the amplifier may be changed to suit the output level of the microphone, which will vary with voice intensity and distance of the speaker from the microphone, by varying the proportion of a.c. voltage applied to the grid of one of the stages. This is done by means of an adjustable voltage divider (§ 2-6), commonly called a "potentiometer" or "volume control," as shown in Fig. 514. The actual voltage applied between grid and cathode will be very nearly equal to the ratio of the resistance between *AB* to the total resistance *AC*, multiplied by the a.c. voltage which appears across *AC*. The gain control is usually also the grid resistor for the amplifier stage with which it is associated.

The gain control potentiometer should be near the input end of the amplifier so that there will be no danger that stages ahead of the gain control will overload. With carbon microphones the gain control may be placed directly across the microphone transformer secondary, but with other types the gain con-

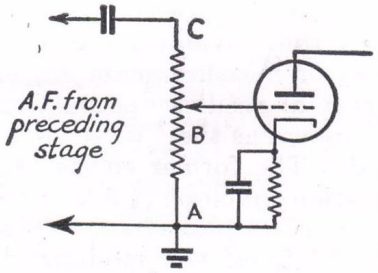

Fig. 514 — Gain control circuit.

trol usually will affect the frequency response of the microphone when connected directly across it. The control is therefore usually placed in the grid circuit of the second stage.

Phase inversion — Push-pull output may be secured with resistance coupling by using an extra tube as shown in Fig. 515. There is a phase shift of 180 degrees through any normally-operating resistance-coupled stage (§ 3-3) and the extra tube is used purely to provide this phase shift without additional gain. The outputs of the two tubes are then added to give push-pull excitation to the next amplifier.

In Fig. 515, V_1 is the regular amplifier, connected in normal fashion to the grid of one of the push-pull tubes. The next-stage grid resistor is tapped so that part of the output voltage is fed to the grid of the phase inverter, V_2. This tube then amplifies the signal and applies it in reverse phase to the grid of the second push-pull tube. Two similar tubes should be used at V_1 and V_2, with identical plate resistors and output coupling condensers. The tap on R_4 is adjusted to make V_1 and V_2 give equal voltage outputs so that balanced excitation is applied to the grids of the following stage.

The cathode resistor, R_6, commonly is left un-bypassed since this tends to help balance the circuit. Double-triode tubes are frequently used as phase inverters.

TABLE I—TYPICAL VOLTAGE AMPLIFIER DATA

Tube Type	R_3, *megohms*	R_6, *megohms*	R_1, *ohms*	*Peak Output Volts*	*Voltage Gain*
6C5	0.1	—	6000	88	13
6J5	0.1	—	3000	64	14
6F5, 6SF5	0.25	—	3000	54	63
6J7	0.25	1.2	1200	104	140
6SJ7	0.25	1.0	900	88	167
	0.5	2.0	1300	64	200

Other values (Fig. 512): C_1, 10 μfd. (low-voltage electrolytic); C_2, 8-μfd. electrolytic; C_3, C_4, 0.1-μfd. paper; R_2, 0.1 to 1 megohm; R_4, 0.5 megohm; R_5, 10,000 to 50,000 ohms. Data are based on a plate-supply voltage of 300; lower values will reduce the undistorted peak output voltage in proportion, but will not materially affect the voltage gain.

Output limiting — It is desirable to modulate as heavily as possible without overmodulating, yet it is difficult to speak into the microphone at a constant intensity. To maintain reasonably constant output from the modulator in spite of variations in speech intensity, it is possible to use automatic gain control which follows the *average* (not instantaneous) variations in speech amplitude. This is accomplished by rectifying and filtering (§ 8-2, 8-3) some of the audio output and applying the rectified and filtered d.c. to a control electrode in an early stage in the amplifier.

A practical circuit for this purpose is shown in Fig. 516. The rectifier must be connected, through the transformer, to a tube capable of

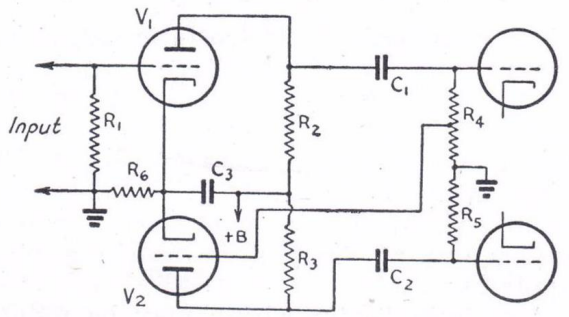

Fig. 515 — Phase inverter circuit for resistance-coupled push-pull output. With a double-triode tube (6N7) the following values are typical:
R_1 — 0.5 megohm.
R_2, R_3 — 0.1 megohm.
R_4, R_5 — 0.5 megohm.
R_6 — 1500 ohms.
C_1, C_2 — 0.1 μfd.
R_4 should be tapped as described in the text. The voltage gain with these constants is 22.

delivering some power output (a small part of the output of the power stage may be used) or else a separate amplifier for the rectifier circuit alone may have its grid connected in parallel with that of the last voltage amplifier. Resistor R_4 in series with R_5 across the plate supply provides variable bias on the rectifier plates so that the limiting action can be delayed until a desired microphone input level is reached. R_2, R_3, C_2, C_3, and C_4 form the filter, (§ 2-11) and the output of the rectifier is connected to the suppressor grid of the pentode first stage of the speech amplifier.

A step-down transformer giving about 50 volts when its primary is connected to the output circuit should be used. A half-wave rectifier can be used instead of the full-wave circuit shown, although satisfactory filtering is more difficult.

Noise — It is important that the noise level in a speech amplifier be low compared to the level of the desired signal. Noise in the speech amplifier is chiefly hum, which may be the result of insufficient power-supply filtering or may be introduced into the grid circuit of a

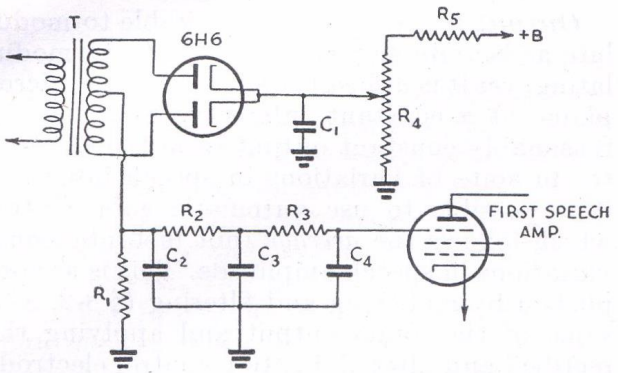

Fig. 516 — Output limiting circuit.
C_1, C_2, C_3, C_4 — 0.1-μfd. paper.
R_1, R_2, R_3 — 0.25 megohm.
R_4 — 25,000-ohm potentiometer.
R_5 — 0.1 megohm.
T — See text.

tube by magnetic or electrostatic means from heater wiring. The plate voltage for the amplifier should be free from ripple (§ 8-4), particularly the voltage applied to the low-level stages. A two-section condenser-input filter (§ 8-5) is usually satisfactory. The decoupling circuits mentioned in the preceding paragraphs also are helpful in reducing plate-supply hum.

Hum from heater wiring may be reduced by keeping the wiring well away from ungrounded components or wiring, particularly in the vicinity of the grid of the first tube. Complete shielding of the microphone jack is advisable, and when tubes with grid caps instead of the single-ended types are used the caps and the exposed wiring to them should be shielded. Heater wiring preferably should run in the corners of a metal chassis to reduce the magnetic field. A ground should be made either on one side of the heater circuit or to the center-tap of the heater winding. The shells of metal tubes should be grounded; glass tubes require separate shields, especially when used in low-level stages. Heater connections to the tube sockets should be kept as far as possible from the plate and grid prongs, and the heater wiring to the sockets should be kept close to the chassis. A connection to a good ground (such as a cold water pipe) also is advisable. The speech amplifier always should be constructed on a metal chassis.

When the power supply is mounted on the same chassis with the speech amplifier, the power transformer and filter chokes should be well separated from audio transformers in the amplifier proper, to reduce magnetic coupling.

• 5-10 CHECKING 'PHONE TRANSMITTER OPERATION

Modulation percentage — The most reliable method of determining percentage of modulation is by means of the cathode-ray oscilloscope (§ 3-9). The oscilloscope gives a direct picture of the modulated output of the transmitter, and the waveform errors inherent in other types of measurements are eliminated.

Two types of oscilloscope patterns may be obtained, known as the "wave envelope" and "trapezoid." The former shows the shape of the modulation envelope (§ 5-2) directly, while the latter in effect plots the modulation characteristic (§ 5-2) of the modulated stage on the cathode-ray tube screen. To obtain the wave-envelope pattern the oscilloscope must have a horizontal sweep circuit. The trapezoid pattern requires only the oscilloscope, the sweep circuit being supplied by the transmitter itself. Fig. 517 shows methods of connecting the oscilloscope to the transmitter for both types of patterns. The oscilloscope connections for the wave-envelope pattern, Fig. 517-A, are usually simpler than those for the trapezoidal figure. The vertical deflection plates are coupled to the amplifier tank coil or an antenna coil by means of a pickup coil of a few turns connected to the oscilloscope through a twisted-pair line. The position of the pickup coil is varied until a carrier pattern, Fig. 518-B, of suitable height is obtained. The sweep voltage should be adjusted to make the width of the pattern somewhat more than half the diameter of the screen. It is frequently helpful in eliminating r.f. harmonics from the pattern to connect a resonant circuit, tuned

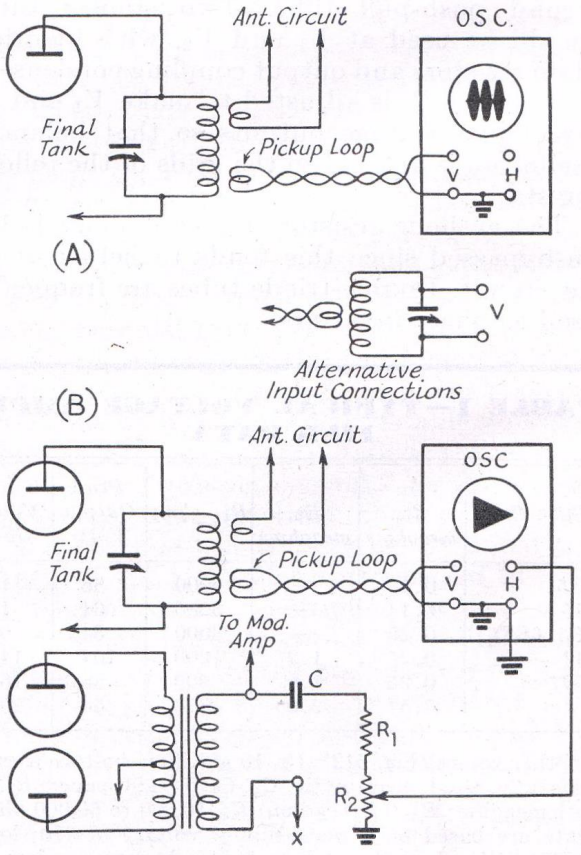

Fig. 517 — Methods of connecting an oscilloscope to the modulated amplifier for checking modulation.

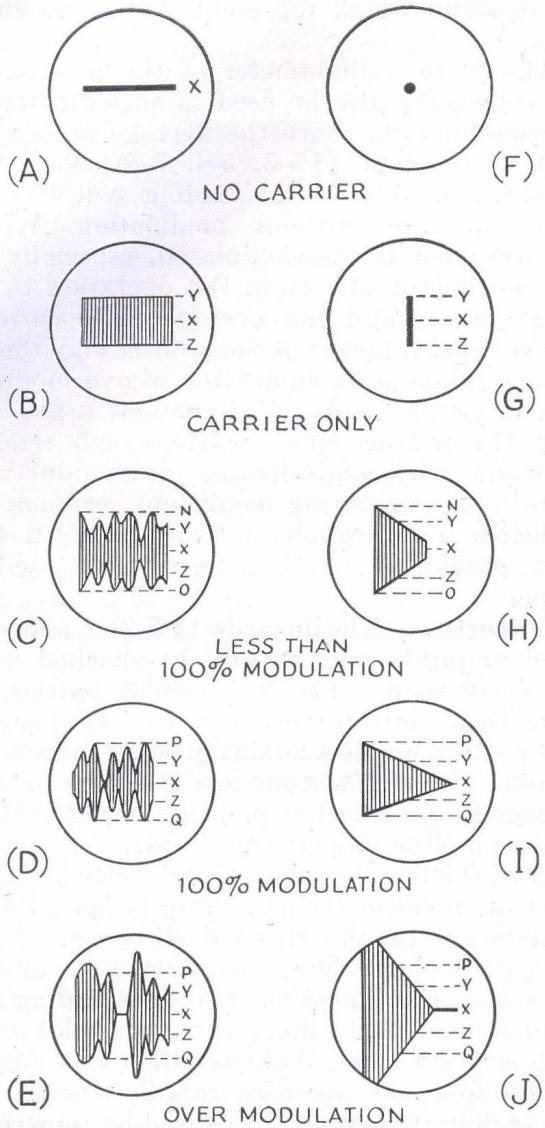

Fig. 518 — **Wave-envelope and trapezoidal patterns under different conditions of modulation.**

to the operating frequency, between the vertical deflection plates, using link coupling between this circuit and the transmitter tank circuit.

With the application of voice modulation a rapidly-changing pattern of varying height will be obtained. When the maximum height of this pattern is just twice that of the carrier alone, the wave is being modulated 100% (§ 5-2). This is illustrated by Fig. 518-D, where the point X represents the sweep line (reference line) alone, YZ is the carrier height, and PQ is the maximum height of the modulated wave. If the height is greater than the distance PQ, as illustrated in E, the wave is overmodulated in the upward direction. Overmodulation in the downward direction is indicated by a gap in the pattern at the reference axis, where a single bright line appears on the screen. Overmodulation in either direction may take place even when the modulation in the other direction is less than 100%. Assuming that the modulation is symmetrical, however, any modulation percentage can be measured directly from the screen by measuring the maximum height with modulation and the height of the carrier alone; calling these two heights h_1 and h_2, respectively, the modulation percentage is

$$\frac{h_1 - h_2}{h_2} \times 100$$

Connections for the trapezoidal pattern are shown in Fig. 517-B. The vertical plates are similarly coupled to the transmitter tank circuit through a pick-up loop; the tuned input circuit to the oscilloscope may also be used. The horizontal plates are coupled to the output of the modulator through a voltage divider (§ 2-6) R_1R_2, the latter resistance being variable to permit adjustment of the audio voltage to a suitable value to give a satisfactory horizontal sweep on the screen. R_2 may be a 0.25-megohm volume control resistor. The value of R_1 will depend upon the audio output voltage of the modulator. This voltage is equal to $\sqrt{PR}$, where P is the audio power output of the modulator and R is the modulating impedance of the modulated r.f. amplifier. In the case of grid-bias modulation with a 1:1 output transformer, it will be satisfactory to assume that the a.c. output voltage of the modulator is equal to $0.7E$ for a single tube, or $1.4E$ for a push-pull stage, where E is the d.c. plate voltage on the modulator. If the transformer ratio is other than 1:1, the voltage so calculated should be multiplied by the actual secondary-to-primary turn ratio. The total resistance of R_1 and R_2 in series should be 0.25 megohm for every 150 volts of modulator output; for example, if the modulator output voltage is 600, the total resistance should be four (600/150) times 0.25 megohm, or 1 megohm. Then with 0.25 megohm at R_2, R_1 should be 0.75 megohm. The blocking condenser C should be 0.1 μfd or more and its voltage rating should be greater than the maximum voltage appearing in the circuit. With plate modulation, this is twice the d.c. voltage applied to the plate of the modulated amplifier.

The trapezoidal patterns are shown in Fig. 518 at F to J, each alongside the corresponding wave-envelope pattern. With no signal, only the cathode ray spot appears on the screen. When the unmodulated carrier is applied a vertical line appears, and its length should be adjusted by means of the pickup coil coupling to a convenient value. When the carrier is modulated the wedge-shaped pattern appears; the higher the modulation percentage the wider and more pointed the wedge becomes. At 100% modulation it just makes a point on the axis A at one end and the height PQ at the other end is equal to twice the carrier height YZ.

PROPERTY OF U.S.

Overmodulation in the upward direction is indicated by increased height over *PQ*, and in the downward direction by an extension along the axis *X* at the pointed end. The modulation percentage may be found by measuring the modulated and unmodulated carrier heights in the same way as with the wave envelope pattern.

Non-symmetrical waveforms — In voice waveforms the average maximum amplitude in one direction from the axis is frequently greater than in the other direction, although the average *energy* on both sides is the same. For this reason the percentage of modulation in the up direction frequently differs from that in the down direction, and with a given voice and microphone this difference in modulation percentage is usually always in the same direction. Since overmodulation in the downward direction causes more out-of-channel interference than overmodulation upward because of the steeper wavefront (§ 6-1), it is advisable to "phase" the modulation so that the side of the voice waveform having the larger excursions causes the instantaneous carrier power to increase and the smaller excursions to cause a power decrease. This reduces the likelihood of overmodulation on the down peak. The direction of the larger excursions can readily be found by careful observation of the oscilloscope pattern. The phase can be reversed by reversing the connections of one winding of any transformer in the speech amplifier or modulator.

Modulation monitoring — While it is desirable to modulate as fully as possible, 100% modulation should not be exceeded, particularly in the downward direction, because harmonic distortion will be introduced and the channel width increased (§ 5-2), thus causing unnecessary interference to other stations. The oscilloscope may be used to provide a continuous check on the modulation, but simpler indicators may be used for the purpose, once calibrated. A convenient indicator, when a Class-B modulator (§ 5-6) is used, is the plate milliammeter in the Class-B stage, since plate current fluctuates with the voice intensity. Using the oscilloscope, determine the gain-control setting and voice intensity which gives 100% modulation on voice peaks, and simultaneously observe the maximum Class-B plate-milliammeter reading on the peaks. When this maximum reading is obtained, it will suffice in regular operation to adjust the gain so that it is not exceeded.

A sensitive rectifier-type voltmeter (copper oxide type) can also be used for modulating monitoring. It should be connected across the output circuit of an audio driver stage where the power level is a few watts, and similarly calibrated against the oscilloscope to determine the reading which represents 100% modulation.

The plate milliammeter of the modulated r.f. stage may also be used as an indicator of overmodulation. Since the average plate current is constant (§ 5-3, 5-4, 5-5) when the amplifier is linear, the reading will be the same with or without modulation. When the amplifier is overmodulated, especially in the downward direction, the operation is no longer linear and the average plate current will change. A flicker of the pointer may therefore be taken as an indication of overmodulation or non-linearity. However, it is possible that the average plate current will remain constant with considerable overmodulation under some operating conditions, so such an indicator is not wholly reliable unless it has been previously checked against an oscilloscope.

Linearity — The linearity (§ 5-2) of a modulated amplifier may readily be checked with the oscilloscope. The trapezoidal pattern is more easily interpreted than the wave envelope pattern and less auxiliary equipment is required. The connections are the same as for measuring modulation percentage (Fig. 517). If the amplifier is perfectly linear, the sloping sides of the trapezoid will be perfectly straight from the point at the axis up to at least 100% modulation in the upward direction. Nonlinearity will be shown by curvature of the sides. Curvature near the point, extending the point farther along the axis than would occur with straight sides, indicates that the output power does not decrease rapidly enough in this region; it may also be caused by imperfect neutralization (a push-pull amplifier is recommended because better neutralization is possible than with single-ended amplifiers) or r.f. leakage from the exciter through the final stage. The latter condition can be checked by removing the plate voltage from the modulated stage, when the carrier should disappear and only the beam spot remain on the screen (Fig. 518-F). If a small vertical line remains the amplifier should be re-neutralized to eliminate it; if this does not suffice, r.f. is being picked up from lower-power stages either by coupling through the final tank circuit or through the oscilloscope pickup circuit.

Inward curvature at the large end of the pattern is caused by improper operating conditions of the modulated amplifier, usually improper bias or insufficient excitation, or both, with plate modulation. In grid-bias and cathode-modulated systems, the bias, excitation and plate loading are not correctly proportioned when such curvature occurs, usually because the amplifier has been adjusted to have too-high carrier efficiency without modulation (§ 5-4, 5-5).

PROPERTY OF

PROPERTY OF U. S.

For the wave-envelope pattern it is necessary to have a linear horizontal sweep circuit in the oscilloscope and a source of sine-wave audio signal (such as an audio oscillator or signal generator) which can be synchronized with the sweep circuit. The linearity can be judged by comparing the wave envelope with a true sine wave. Distortion in the audio circuits will affect the pattern in this case (such distortion has no effect on the trapezoidal pattern, which shows the modulation characteristic of the r.f. amplifier alone), and it is also readily possible to misjudge the shape of the modulation envelope, so that the wave envelope is less useful than the trapezoid for checking linearity of the modulated amplifier.

Fig. 519 shows typical patterns of both types. The cause of the distortion is indicated for grid-bias and suppressor modulation. The patterns at *A*, although not truly linear, are representative of properly-operated grid-bias modulation systems. Better linearity can be obtained with plate modulation of a Class-C amplifier.

Faulty patterns — The drawings of Figs. 518 and 519 show what is normally to be expected in the way of pattern shapes when the oscilloscope is used to check modulation. If the actual patterns differ considerably from those shown, it is probable that the pattern is faulty rather than the transmitter. It is important that only r.f. from the modulated stage be coupled to the oscilloscope, and then only to the vertical plates. The effect of stray r.f. from other stages in the transmitter has been mentioned in the preceding paragraph. If r.f. is also present on the horizontal plates, the pattern will lean to one side instead of being upright. If the oscilloscope cannot be moved to a spot where the unwanted pick-up disappears, a small by-pass condenser (10 $\mu\mu$fd.) should be connected across the horizontal plates as close to the cathode-ray tube as possible. An r.f. choke (2.5 mh. or smaller) may also be connected in series with the ungrounded horizontal plate.

"Folded" trapezoidal patterns occur when the audio sweep voltage is taken from some point in the audio system other than that where the a.f. power is applied to the modulated stage, and are caused by a phase difference between the sweep voltage and the modulating voltage. The connections should always be as shown in Fig. 517-B.

Plate-current shift — As mentioned above, the d.c. plate current of a modulated amplifier will be the same with and without modulation so long as the amplifier operation is perfectly linear and other conditions remain unchanged. This also assumes that the modulator is working within its capabilities. Because there is usually some curvature of the modulation

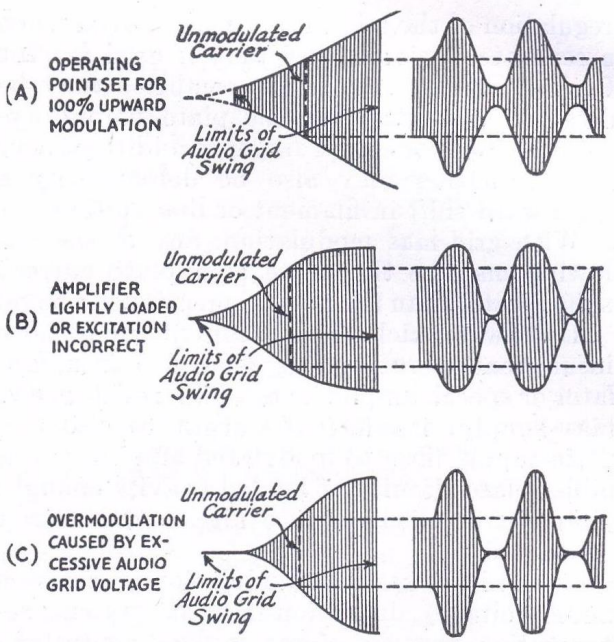

Fig. 519 — Oscilloscope patterns representing proper and improper grid-bias or cathode modulation. The pattern obtained with a correctly adjusted amplifier is shown at A. The other two drawings indicate non-linear modulation.

characteristic with grid-bias modulation there is normally a slight upward change in plate current of a stage so modulated, but this occurs only at high modulation percentages and is barely detectable under the usual conditions of voice modulation.

With plate modulation, a downward shift in plate current may indicate one or more of the following:

1. Insufficient excitation to the modulated r.f. amplifier.
2. Insufficient grid bias on the modulated stage.
3. Wrong load resistance for Class-C r.f. amplifier.
4. Insufficient output capacity in filter of modulated amplifier plate supply.
5. Heavy overloading of Class-C r.f. amplifier tube or tubes.

Any of the following may cause an upward shift in plate current:

1. Overmodulation (excessive audio power, audio gain too great).
2. Incomplete neutralization of the modulated amplifier.
3. Parasitic oscillation in the modulated amplifier.

When a common plate supply is used for both Class-B (or Class AB) modulator and modulated r.f. amplifier, the plate current of the latter may "kick" downward because of poor power-supply voltage regulation (§ 8-1) with the varying additional load of the modulator on the supply. The same effect may occur with high-power transmitters because of poor

PROPERTY OF U.S.

regulation of the a.c. supply mains, even when a separate power supply unit is used for the Class-B modulator. Either condition may be detected by measuring the plate voltage applied to the modulated stage; in addition, poor line regulation may also be detected by a downward shift in filament or line voltage.

With grid-bias modulation, any of the following may be the cause of a plate current shift greater than the normal mentioned above:

Downward kick: Too much r.f. excitation; insufficient operating bias; distortion in modulator or speech amplifier; too-high resistance in bias supply; insufficient output capacity in plate-supply filter to modulated amplifier; amplifier plate circuit not loaded heavily enough; plate-circuit efficiency too high under carrier conditions.

Upward kick: Overmodulation (excessive audio voltage); distortion in audio system; regeneration because of incomplete neutralization; operating grid bias too high.

A downward kick in plate current will accompany an oscilloscope pattern like that of Fig. 519-B; the pattern with an upward kick will look like Fig. 519-A with the shaded portion extending farther to the right and above the carrier, for the "wedge" pattern.

Noise and hum on carrier — These may be detected by listening to the signal on a receiver sufficiently removed from the transmitter to avoid overloading. The hum level should be low compared to the voice at 100% modulation. Hum may come either from the speech amplifier and modulator or from the r.f. section of the transmitter. Hum from the r.f. section can be detected by completely shutting off the modulator; if hum remains when this is done the power-supply filters for one or more of the r.f. stages have insufficient smoothing (§ 8-4). With a hum-free carrier, hum introduced by the modulator can be checked by turning on the modulator but leaving the speech amplifier off; power-supply filtering is the likely source of such hum. If carrier and modulator are both clean, connect the speech amplifier and observe the increase in hum level. If the hum disappears with the gain control at minimum, the hum is being introduced in the stage or stages preceding the gain control. The microphone may also pick up hum, a condition which can be checked by removing the microphone from the circuit but leaving the first speech-amplifier grid circuit otherwise unchanged. A good ground on the microphone and speech system is usually essential to hum-free operation.

Hum can be checked with the oscilloscope, where it appears as modulation on the carrier in the same way as the normal modulation. Usually the percentage is rather small, but if the carrier shows modulation with no speech input hum is the likely cause. The various parts of the transmitter may be checked through as described above.

Spurious sidebands — A superheterodyne receiver having a crystal filter (§ 7-8, 7-11) is needed for checking spurious sidebands outside the normal communication channel (§ 5-2). The r.f. input to the receiver must be kept low enough, by removing the antenna or by adequate separation from the transmitter, to avoid overloading and consequent spurious receiver responses (§ 7-8). With the crystal filter in its sharpest position and the beat oscillator turned on, tune through the region outside the normal channel limits (3 to 4 kc. each side of the carrier) while another person talks into the microphone. Spurious sidebands will be observed as intermittent beat notes coinciding with voice peaks, or in bad cases of distortion or overmodulation as "clicks" or crackles well away from the carrier frequency. Sidebands more than 4 kc. from the carrier should be of negligible strength in a properly modulated 'phone transmitter. The causes are overmodulation or non-linear operation (§ 5-3).

R.f. in speech amplifier — A small amount of r.f. current in the speech amplifier — particularly in the first stage, which is most susceptible to such r.f. pick-up — will cause overloading and distortion in the low-level stages. Frequently also there is a regenerative effect which causes an audio-frequency oscillation or "howl" to be set up in the audio system. In such cases the gain control cannot be advanced very far before the howl builds up, even though the amplifier may be perfectly stable when the r.f. section of the transmitter is not turned on.

Complete shielding of the microphone, microphone cord and speech amplifier are necessary to prevent r.f. pick-up, and a ground connection separate from that to which the transmitter is connected is advisable. Unsymmetrical or capacity coupling to the antenna (single-wire feed, feeders tapped on final tank circuit, etc.) may be responsible in that these systems sometimes cause the transmitter chassis to take an r.f. potentional above ground. Inductive coupling to a two-wire transmission line is advisable. This antenna effect can be checked by disconnecting the antenna and dissipating the power in a dummy antenna (§ 4-9) when it usually will be found that the r.f. feedback disappears. If it does not, the speech amplifier and microphone shielding are at fault.

• 5-11 FREQUENCY MODULATION

Principles — In frequency modulation the carrier amplitude is constant and the output frequency of the transmitter is made to vary about the carrier or mean frequency at a rate

corresponding to the audio frequencies of the speech currents. The extent to which the frequency changes in one direction from the unmodulated or carrier frequency is called the *frequency deviation.* It corresponds to the change of carrier amplitude in the amplitude-modulation system (§ 5-2). Deviation is usually expressed in kilocycles, and is equal to the difference between the carrier frequency and either the highest or lowest frequency reached by the carrier in its excursions with modulation. There is no modulation percentage in the usual sense; with suitable circuit design the deviation may be made as large as desired without encountering any effect equivalent to overmodulation in the amplitude system.

Deviation ratio — The ratio of the maximum frequency deviation to the audio frequency of the modulation is called the *deviation ratio.* Unless otherwise specified, it is taken as the ratio of the maximum frequency deviation to the *highest* audio frequency to be transmitted.

Advantages of f.m. — The chief advantage of frequency modulation over amplitude modulation is noise reduction at the receiver. All electrical noises in the radio spectrum, including those originating in the receiver, are r.f. oscillations which vary in amplitude, this variation causing the noise response in amplitude-modulation receivers. If the receiver does not respond to amplitude variations but only to frequency changes, noise can affect it only by causing a phase shift which appears as frequency modulation on the signal. The effect of such frequency modulation by the noise can be made small by making the frequency change (deviation) in the signal large.

A second advantage is that the power required for modulation is inconsequential, since there is no power variation in the modulated output.

Triangular spectrum — The way in which noise is reduced by a large deviation ratio is illustrated by Fig. 520. In this figure the noise is assumed to be evenly distributed over the channel used, an assumption which is almost always true. It is also assumed that audio frequencies above 4000 cycles (4 kc.) are not necessary to voice communication, and that the audio system in the receiver has no response above this frequency. Then if an amplitude modulation receiver is used and its selectivity is such that there is no attenuation of sidebands (§ 5-2) below 4000 cycles, the noise components of all frequencies within the channel will produce equal response when they beat with a carrier centered in the channel. This is shown by the line *DC.*

In the f.m. receiver the output amplitude is proportional to the frequency deviation, and

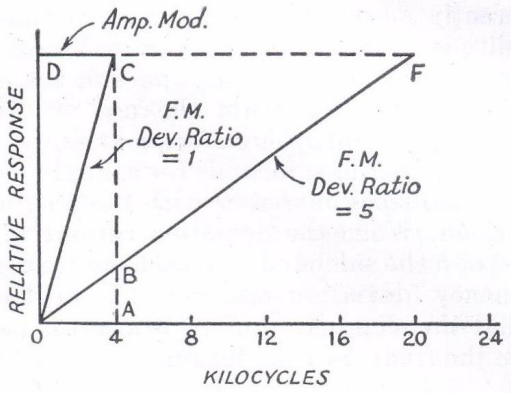

Fig. 520 — **Triangular spectrum of noise response in an f.m. receiver compared with amplitude modulation. Deviation ratios of 1 and 5 are shown.**

noise components in the channel can be considered to frequency-modulate the steady carrier with a deviation proportional to the difference between the actual frequency of the component and the frequency of the carrier, and also to give an audio-frequency beat of the same frequency difference. This leads to a rising response characteristic such as the line *OC*, where the noise amplitude is proportional to the audio beat frequency. The average noise power output is proportional to the square root of the sum of the squares of all the amplitude values (§ 2-7), so that the noise power with f.m. having a deviation ratio of 1 is only ⅓ that with amplitude modulation, or an improvement of 4.75 db.

If the deviation ratio is increased to 5, the noise response is represented by the line *OF*, but only frequencies up to 4000 cycles are reproduced in the output so the audible noise is confined to the triangle *OAB*. These relations only hold when the carrier is strong compared to the noise. With weak signals the signal-to-noise ratio is better with a deviation ratio of 1.

Linearity — A transmitter in which frequency deviation is directly proportional to the amplitude of the modulating signal is said to be *linear.* It is also essential that the carrier amplitude remain constant under modulation, which in turn requires that the transmitter tuned circuits be broad enough to handle without discrimination the range of frequencies transmitted. This requirement is easily met under ordinary conditions.

Sidebands — In frequency modulation there is a series of sidebands on either side of the carrier frequency for each audio-frequency component in the modulation. In addition to the usual sum and difference frequencies (§ 5-2) there are also beats at harmonics of the fundamental modulating frequency, even though the latter may be a pure tone. This occurs because of the necessity for maintaining the proper phase relationships between the carrier and sidebands to keep the power output constant. Hence a frequency-modulated signal

inherently occupies a wider channel than an amplitude-modulated signal, and because of the necessity for conserving space in the usual communication spectrum the use of f.m. is confined to the ultra-high frequencies.

The number of sidebands for a single modulating frequency increases with the frequency deviation. When the deviation ratio is of the order of 5 the sidebands beyond the maximum frequency deviation are usually negligible, so that the channel required is approximately twice the frequency deviation.

• 5-12 METHODS OF FREQUENCY MODULATION

Requirements and methods — At present there are no fixed standards of frequency deviation in amateur work. Since a deviation ratio of 5 is considered high enough in any case, the maximum deviation necessary is 15 to 20 kc. for an upper audio-frequency limit of 3000 or 4000 cycles (§ 5-2), or a channel width of 30 to 40 kc. The permissible deviation is determined by the receiver (§ 7-18), since deviation beyond the limits of the receiver pass-band causes distortion. If the transmitter is designed to be linear (§ 5-11) with a deviation of about 15 kc. it can be used at lower deviation ratio simply by reducing the gain in the speech amplifier, and thereby made to conform to the requirements of the particular receiver in use.

The several possible methods of frequency modulation include mechanical (for instance, varying condenser plate spacing in accordance with voice vibrations), initial phase modulation which is later transformed into frequency modulation, and direct frequency modulation of an oscillator by electrical means. The latter, in the form of the *reactance modulator*, is the simplest system.

The reactance modulator — The reactance modulator is a vacuum tube amplifier connected to the r.f. tank circuit of an oscillator in such a way as to act as a variable inductance or capacity of a value dependent upon the instantaneous a.f. voltage applied to its grid. Fig. 521 is a representative circuit. The control grid circuit of the 6L7 tube is connected across the small capacity C_1, which is in series with the resistor R_1 across the oscillator tank circuit. Any type of oscillator circuit (§ 3-7) may be used. R_5 is large compared to the reactance (§ 2-8) of C_1, so the r.f. current through R_5C_1 will be practically in phase (§ 2-7) with the r.f. voltage appearing at the terminals of the tank circuit. However, the voltage across C_1 will lag the current by 90 degrees (§ 2-8). The r.f. current in the plate circuit of the 6L7 will be in phase with the grid voltage (§ 3-3) and consequently is 90 degrees behind the current through C_1, or 90 degrees behind the r.f. tank voltage. This lagging current is drawn through the oscillator tank, giving the same effect as though an inductance were connected across the tank (in an inductance the current lags the voltage by 90 degrees — § 2-8). The frequency is therefore increased in proportion to the lagging plate current of the modulator. This in turn is determined by the a.f. voltage applied to the No. 3 grid of the 6L7, hence the oscillator frequency varies with the audio signal.

Other circuit arrangements to produce the same effect can be used. It is convenient to use a tube (such as the 6L7) in which the r.f. and a.f. voltages can be applied to separate control grids; however, both voltages may be applied to the same grid with suitable precautions taken to prevent r.f. from flowing in the external audio circuit and vice versa (§ 2-13).

The modulated oscillator is usually operated on a relatively low frequency so that a high order of carrier stability can be secured. Frequency multipliers are used to raise the frequency to the final frequency desired. The frequency deviation increases with the number of times the initial frequency is multiplied; for instance, if the oscillator is operated on 7 Mc. and the output frequency is to be 112 Mc., an oscillator frequency deviation of 1000 cycles will be raised to 16,000 cycles at the output frequency.

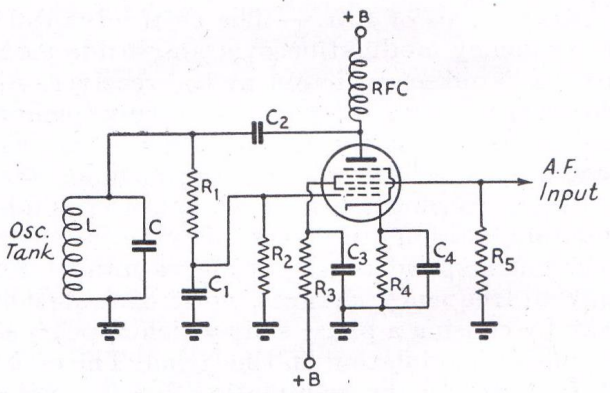

Fig. 521 — Reactance modulator circuit using a 6L7 tube.

C — Oscillator tank capacity.
C_1 — 3–10 μμfd. (See text.)
C_2 — 250 μμfd.
C_3 — 8-μfd. electrolytic (a.f. by-pass) in parallel with 0.01-μfd. paper (r.f. by-pass).
C_4 — 0.01 μfd.
L — Oscillator tank inductance.
R_1 — 50,000 ohms.
R_2 — 0.5 megohm.
R_3 — 30,000 ohms.
R_4 — 300 ohms.
R_5 — 0.5 megohm.

Design considerations — The sensitivity of the modulator (frequency change per unit change in grid voltage) increases when C_1 is made smaller, for a fixed value of R_1, and also increases with an increase in L/C ratio in the oscillator tank circuit. Since the carrier

stability of the oscillator depends on the L/C ratio (§ 3-7) it is desirable to use the highest tank capacity which will permit the desired deviation to be secured while keeping within the limits of linear operation. When the circuit of Fig. 521 is used in connection with a 7-Mc. oscillator, a linear deviation of 2000 cycles above and below the carrier frequency can be secured when the oscillator tank capacity is approximately 200 $\mu\mu$fd. A peak a.f. input of two volts is required for full deviation. At 56 Mc. the maximum deviation would be 8×2000 or 16 kc.

Since a change in any of the voltages on the modulator tube will cause a change in r.f. plate current and consequently a frequency change, it is advisable to use a regulated plate supply for both modulator and oscillator. At the low voltages used (250 volts), the required stabilization can be secured by means of gaseous regulator tubes (§ 8-8).

Speech amplification — The speech amplifier preceding the modulator follows ordinary design (§ 5-9) except that no power is required from it and the a.f. voltage taken by the modulator grid is usually small — not more than 10 or 15 volts even with large modulator tubes. Because of these modest requirements only a few speech-amplifier stages are needed; a two-stage amplifier consisting of a pentode followed by a triode, both resistance coupled, will suffice for crystal microphones (§ 5-8).

R.f. amplifier stages — The frequency multiplier and output stages following the modulated oscillator may be designed and adjusted in accordance with ordinary principles. No special excitation requirements are imposed, since the amplitude of the output is constant. Enough frequency multiplication must be used to give the desired maximum deviation at the final frequency; this depends upon the maximum linear deviation available from the modulator-oscillator. All stages in the transmitter should be tuned to resonance, and careful neutralization of any straight amplifier stages (§ 4-7) is necessary to prevent r.f. phase shifts which might cause distortion.

Checking operation — The two quantities to be checked in the f.m. transmitter are linearity and frequency deviation. With a modulator of the type shown in Fig. 521, both the r.f. and a.f. voltages are small enough to make the operation Class A (§ 3-4) so that the plate current of the modulator is constant so long as operation is over the linear portions of the No. 1 and No. 3 grid characteristics. Hence non-linearity will be indicated by a change in plate current as the a.f. modulating voltage is increased. The distortion will be within acceptable limits with the tube and constants given in Fig. 521 when the plate current does not change more than 5% with signal.

Non-linearity is accompanied by a shift in the carrier frequency, so it can also be checked by means of a selective receiver such as one with a crystal filter (§ 7-11). A tone source is convenient for the test. Set the receiver for high selectivity, switch on the beat oscillator and tune to the oscillator carrier frequency. (The check does not need to be made at the output frequency, and the oscillator frequency usually is more convenient since it will fall within the tuning range of a communications receiver.) Increase the modulating signal until a definite shift in carrier frequency is observed; this indicates the point at which non-linearity starts. The modulating signal should be kept below this level for minimum distortion.

A selective receiver also can be used to check frequency deviation, again at the oscillator frequency. A source of tone of known frequency is required, preferably a continuously variable calibrated audio oscillator or signal generator. Tune in the carrier as described above, using the beat oscillator and high selectivity, and adjust the modulating signal to the maximum level at which linear operation is secured. Starting with the lowest frequency available, slowly raise the tone frequency while listening closely to the carrier beat note. As the tone frequency is raised the beat note will decrease in intensity, disappear entirely at a definite frequency, then come back and increase in intensity as the tone frequency is raised still more. The frequency at which the beat note disappears multiplied by 2.4 is the frequency deviation at that level of modulating signal; for example, if the beat note disappears with an 800-cycle tone the deviation is 2.4×800, or 1920 cycles. The deviation at the output frequency is the oscillator deviation multiplied by the number of times the frequency is multiplied; in this example, if the oscillator is on 7 Mc. and the output on 56 Mc., the final deviation is 1920×8, or 15.36 kc.

The output of the transmitter can be checked for amplitude modulation by observing the antenna current. It should not change from the unmodulated carrier value when the transmitter is modulated. If there is no antenna ammeter in the transmitter, a flashlight lamp and loop can be coupled to the final tank coil to serve as a current indicator. The lamp brilliance should not change with modulation.

CHAPTER SIX

Keying

• 6-1 KEYING PRINCIPLES AND CHARACTERISTICS

Requirements — The keying of a transmitter can be considered satisfactory if the method employed reduces the power output to zero when the key is open, or "up," and permits full power to reach the antenna when the key is closed, or "down." Furthermore, it should do this without causing keying transients or "clicks," which cause interference with other amateur stations and with local broadcast reception, and it should not affect the frequency of the emitted wave.

Back-wave — From various causes some energy may get through to the antenna during keying spaces. The effect then is as though the dots and dashes were simply louder portions of a continuous carrier; in some cases, in fact, the *back-wave*, or signal heard during the keying spaces, may seem to be almost as loud as the keyed signal. Under these conditions the keying is hard to read. A pronounced back-wave often results when the amplifier stage feeding the antenna is keyed; it may be present because of incomplete neutralization (§ 4-7) of the final stage, allowing some energy to get to the antenna through the grid-plate capacity of the tube, or because of magnetic coupling between antenna coupling coils and one of the low-power stages.

A back-wave also may be radiated if the keying system does not reduce the input to the keyed stage to zero during keying spaces. This trouble will not occur in keying systems which cut off the plate voltage when the key is open, but may be present in grid-blocking systems (§ 6-3) if the blocking voltage is not great enough and, in power supply primary-keyed systems (§ 6-3) if only the final stage power supply primary is keyed.

Keying waveform and sidebands — A c.w. signal can be considered equivalent to any modulated signal (§ 5-1) except that instead of being modulated by sinusoidal waves and their harmonics, it is modulated by a rectangular wave as in Fig. 601-A. If it were modulated by a sinusoidal wave of single frequency, as in Fig. 601-B, the only sidebands would be those equal to the carrier frequency plus and minus the modulation frequency (§ 5-2). A keying speed of 50 words per minute, sending sinusoidal dots, would give sidebands only 20 cycles either side of the carrier. However, when harmonics are present in the modulation, the sidebands will extend out on both sides of the signal as far as the frequency of the highest harmonic. The rectangular wave form contains an infinite number of harmonics of the keying frequency, so a carrier modulated by truly rectangular dots would have sidebands covering the entire spectrum. Actually the high-order harmonics are eliminated because of the selectivity of the tuned circuits (§ 2-10) in the transmitter, but there is still enough energy in the lower harmonics to extend the sidebands considerably. Considered from another viewpoint, whenever a pulse of current has a steep front (or back) high frequencies are certain to be present. If the pulse can be slowed down, or caused to *lag*, through a filter the highest-order harmonics are filtered out.

Key clicks — Because the high-order harmonics exist only when the keying character is started or ended (when the amplitude is building up or dying down) their effects outside the normal communication channel are observed as pulses of very short duration. These pulses are called *key clicks*.

Tests have shown that practically all operators prefer to copy a signal which is "solid" on the "make" end of each dot or dash; i.e., one that does not build up too slowly, but just slowly enough to have a slight click when the key is closed. The same tests indicate that the most pleasing and least difficult signal to copy, particularly at high speeds, is one that has a fairly soft "break" characteristic; i.e., one that has practically no click as the key is opened. A signal with heavy clicks on both

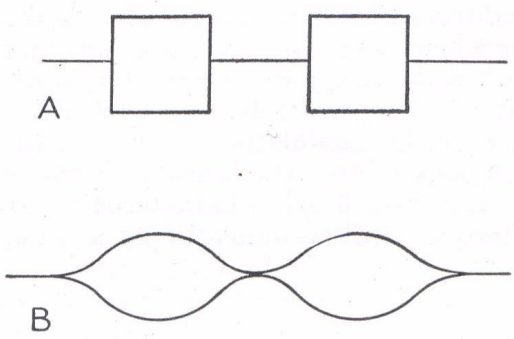

Fig. 601 — Extremes of possible keying waveshapes. A, rectangular characters; B, sine-wave characters.

make and break is difficult to copy at high speeds (and also causes considerable interference), but if it is too "soft" the dots and dashes will tend to run together. It is relatively simple to adjust the keying of a transmitter so that for all normal hand speeds (15 to 40 w.p.m.) the readability will be satisfactory while the keying still will not cause interference to reception of other signals near the frequency of the transmitter.

Break-in keying — Since in code transmission there are definite intervals, between dots and dashes and between words, when no power is being radiated by the transmitter it is possible, with suitable keying methods, to allow the receiver to operate continuously and thus be capable of receiving incoming signals during the keying intervals. This practice facilitates communication because the receiving operator can signal the transmitting operator, by holding down the key of his transmitter, whenever he has failed to copy part of the message and thus obtain a repetition of the missing part without loss of time. This is called *break-in* operation.

Frequency stability — Keying should have no effect upon the output frequency of a properly designed and adjusted transmitter. However, in many instances keying will cause a "chirp," or small frequency change at the instant of closing or opening the key, which makes the signal difficult to read. Multi-stage transmitters keyed in a stage subsequent to the oscillator are usually free from this condition unless the keying causes line-voltage changes which in turn affect the frequency of the oscillator. When the oscillator is keyed for break-in operation special care must be taken to insure that the signal does not have keying chirps.

Selecting the stage to key — It is advantageous from an operating standpoint to design the c.w. transmitter for break-in operation. In ordinary cases this dictates that the oscillator be keyed, since a continuously-running oscillator will create interference in the receiver and thus prevent break-in operation on or near the transmitter frequency. On the other hand, it is easier to avoid a chirpy signal by keying a buffer or amplifier stage. In either case, the tubes following the keyed stage must be provided with sufficient fixed bias to limit the plate currents to safe values when the key is up and they are not being excited (§ 8-9). Complete cut-off reduces the possibility of a back-wave if a stage other than the oscillator is keyed, but the keying waveform is not as well preserved and some clicks can be introduced even though the keyed stage itself produces no clicks. It is a good general rule to bias the tubes to take a key-up plate current equal to about 5% of the normal key-down value.

Keyed power — The power broken by the key is an important consideration, both from the standpoint of safety for the operator and arcing at the key contacts. Keying the oscillator or a low-power stage is favorable in both respects. The use of a keying relay is highly recommended when a high-power circuit is keyed.

• 6-2 KEYING CIRCUITS

Plate-circuit keying — Any stage of the transmitter can be keyed by opening and closing the plate power circuit. Two methods are shown in Fig. 602. In *A* the key is in series with the negative lead from the plate power supply to the keyed stage. It could also be placed in the positive lead, although this is to be avoided whenever possible because the key is necessarily at the plate voltage above ground and there is danger of shock unless a keying relay is used.

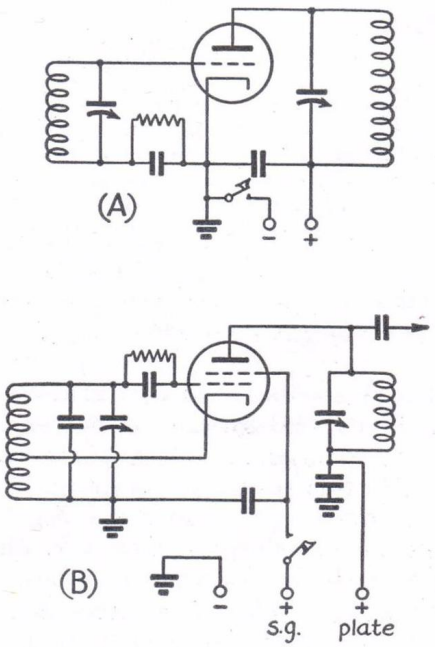

Fig. 602 — A, plate keying; B, screen-grid keying. Oscillator circuits are shown in both cases, but the keying methods also can be used with amplifiers.

Fig. 602-B shows the key in the screen-supply lead of an electron-coupled oscillator. This can be considered to be a variation of plate keying.

The circuits of Figs. 602-A and B respond well to the use of key-click filters, and are particularly suitable for use with crystal and self-controlled oscillators operating at low plate voltage and power input.

Power-supply keying — A variation of plate keying, in which the keying is introduced in the power supply itself rather than between the power supply and transmitter, is illustrated by the diagrams in Fig. 603.

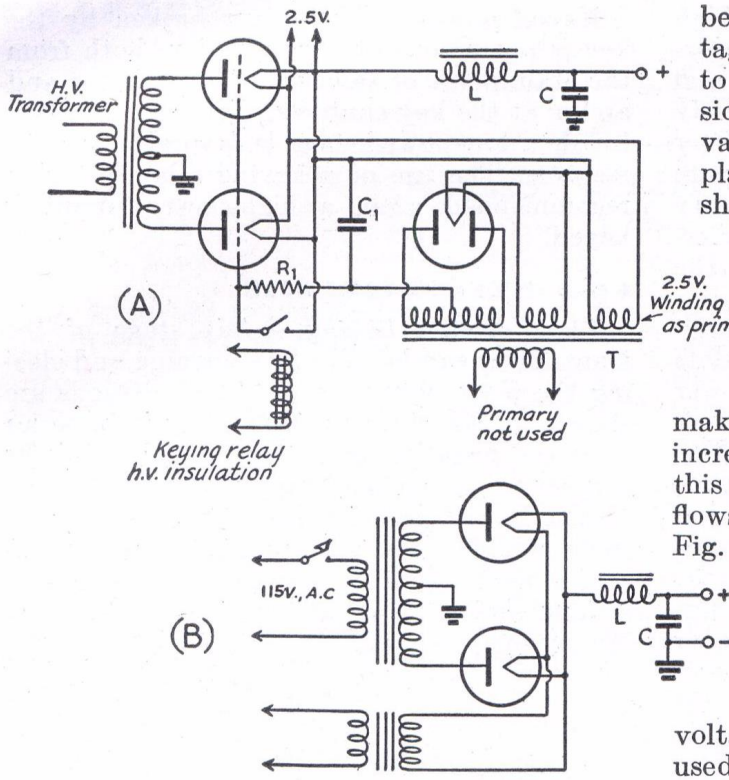

Fig. 603 — Power-supply keying. Grid-control rectifiers are used in A. Transformer T is a small multiple-secondary unit of the type used in receiver power supplies, and is used in conjunction with the full-wave rectifier tube to develop bias voltage for the grids of the high-voltage rectifiers. R_1 limits the load on the bias supply when the keying relay is closed; 50,000 ohms is a suitable value. C_1 may be 0.1 μfd. or larger. L and C constitute the smoothing filter for the high-voltage supply in both circuits. B shows primary keying.

Fig. 603-A shows the use of grid-controlled rectifier tubes (§ 3-5) in the power supply. Keying is accomplished by applying suitable bias to the grids to cut off plate current flow when the key is open, and removing the bias when the key is closed. Since this circuit is used only with high-voltage supplies, a well-insulated keying relay is a necessity. Direct keying of the primary of the plate power transformer for the keyed stage or stages is shown in Fig. 603-B. This and the method at B inherently have a keying lag because of the time constant (§ 2-6) of the smoothing filter. If enough filter is provided to reduce ripple to a low percentage (§ 8-4) the lag (§ 6-1) is too great to permit crisp keying at speeds above about 25 words per minute, although this type of keying is very effective in eliminating key clicks. A single-section filter (§ 8-6) is about the most that can be used for a reasonably-good keying characteristic.

Blocked-grid keying — Keying may be accomplished by applying sufficient negative bias voltage to a control or suppressor grid to cut off plate current flow when the key is open, and by removing this *blocking* bias when the key is closed. The blocking bias voltage must be sufficient to overcome the r.f. grid voltage, in the case where the bias is applied to the control grid, and hence must be considerably higher than the nominal cut-off value for the tube at the operating d.c. plate voltage. The fundamental circuits are shown in Fig. 604.

In both circuits the key is connected in series with a resistor, R_1, which limits the current drain on the blocking-bias source when the key is closed. R_2C_1 is a resistance-capacity filter (§ 2-11) for controlling the lag on make and break of the key circuit. The lag increases as the time constant (§ 2-6) of this circuit is made larger. Since grid current flows through R_2 when the key is closed in Fig. 604-A, additional operating bias is developed, hence somewhat less bias is needed from the regular bias supply. The operating and blocking biases can be obtained from the same supply, if desired, by utilizing suitable taps on a voltage divider (§ 8-10) or if no fixed bias is used R_2 can be the regular grid leak (§ 3-6) for the stage.

With blocked-grid keying a relatively small direct current is broken as compared to other systems, thus sparking at the key is reduced. The keying characteristic (lag) readily can be controlled by choice of values for C_1 and R_2.

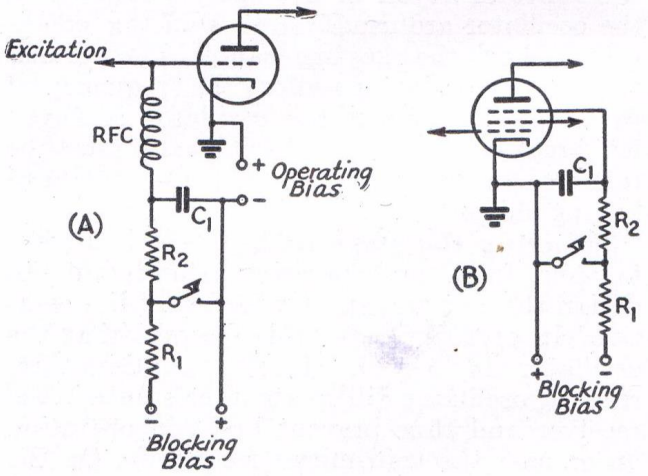

Fig. 604 — Blocked-grid keying. R_1, the current-limiting resistor, should have a value of about 50,000 ohms. C_1 may have a capacity of 0.1 to 1 μfd., depending upon the keying characteristics desired. R_2 is similarly variable, values being of the order of 5000 to 10,000 ohms in most cases.

Cathode keying — Opening the d.c. circuits of both plate and grid simultaneously is called *cathode keying*, or *center-tap* keying with a directly-heated filament-type tube, since in the latter case the key is placed in the filament-transformer center-tap lead. The circuits are shown in Fig. 605.

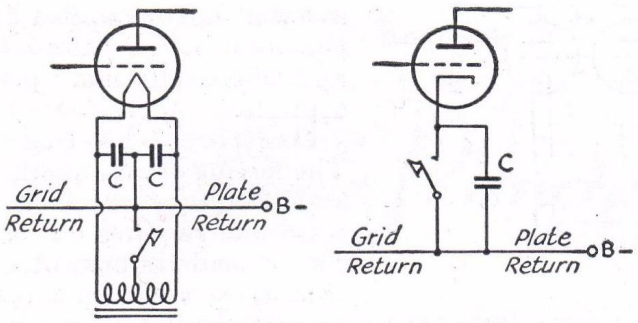

Fig. 605 — Center-tap and cathode keying. Condenser C is an r.f. by-pass condenser having a capacity of 0.001 to 0.01 μfd.

Cathode keying results in less sparking at the key contacts, for the same plate power, as compared with keying in the plate-supply lead. When used with an oscillator it does not respond as readily to key-click filtering (§ 6-3) as does plate keying, but there is little difference in this respect between the two systems when an amplifier is keyed.

• 6-3 KEY-CLICK REDUCTION

R.f. filters — A spark at the key contacts, even though minute, will cause a damped oscillation to be set up in the keying circuit which may modulate the transmitter output or may simply be radiated by the wiring to

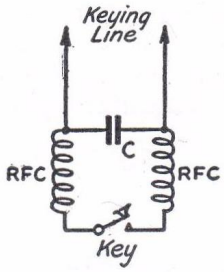

Fig. 606 — R.f. filter for eliminating effects of sparking at key contacts. Values are discussed in the text.

the key. Interference from this source is usually confined to the immediate vicinity of the transmitter, and is similar in nature and effects to the click which is frequently heard in a receiver when an electric light is turned on or off. It can be minimized by isolating the key from the wiring by means of a low-pass filter (§ 2-11), which usually consists of an r.f. choke in each key lead, placed as close as possible to the key, by-passed on the keying-line side by a condenser, as shown in Fig. 606. Suitable values must be determined by experiment. Chokes values may range from 2.5 to 80 millihenrys, and condenser capacities from 0.001 to 0.1 μfd.

This type of filter is required in nearly every keying installation, in addition to the lag circuits discussed in the next paragraph.

Lag circuits — A filter used to give a desired shape to the keying character to eliminate unnecessary sidebands and consequent interference is called a *lag circuit.* In one form, suitable for the circuits of Figs. 602 and 605, it consists of a condenser across the key terminals and an inductance in series with one of the leads. This is shown in Fig. 607. The optimum values of capacity and inductance must be found by experiment, but are not especially critical. If a high-voltage low-current circuit is being keyed, a small condenser and large inductance will be necessary, while if a low-voltage high-current circuit is keyed, the capacity required will be high and the inductance small. For example, a 300-volt 6-ma. circuit will require about 30 henrys and 0.05 μfd., while a 300-volt 50-ma. circuit needs about 1 henry and 0.5 μfd. For any given circuit

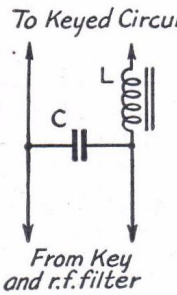

Fig. 607 — Lag circuit for shaping the keying character. Values are discussed in the text.

and fixed values of current and voltage, increasing the inductance will reduce clicks on "make," and increasing the capacity will reduce the clicks on "break."

Blocked-grid keying is adjusted by changing the values of resistors and condensers in the circuit. In Fig. 604, the click on "make" is reduced by increasing the capacity of C_1 and the click on break is reduced by increasing C_1 and/or R_2. The values will vary with the amount of blocking voltage and the grid current. The constants given in Fig. 604 will serve as a first approximation.

Tube keying — A tube keyer is a convenient adjunct to the transmitter because it allows the keying characteristic to be adjusted easily without necessitating condenser and inductance values which may not be readily available. It uses the plate resistance of a tube (or tubes in parallel) to replace the key in a plate or cathode circuit, the keyer tube (or tubes) being keyed by the blocked-grid method (§ 6-2). A typical circuit is shown in Fig. 608. Type 45 tubes are suitable because of their low plate resistance and consequently small voltage drop between plate and cathode. When a tube keyer is used to replace the key in a plate or cathode circuit the power output of the stage will be somewhat reduced because of the voltage drop across the keyer tube, but this can be compensated for by a slight increase in the supply voltage. A tube keyer makes the key itself very safe to handle, since the high resistance in series with the key and blocking voltage prevents shock.

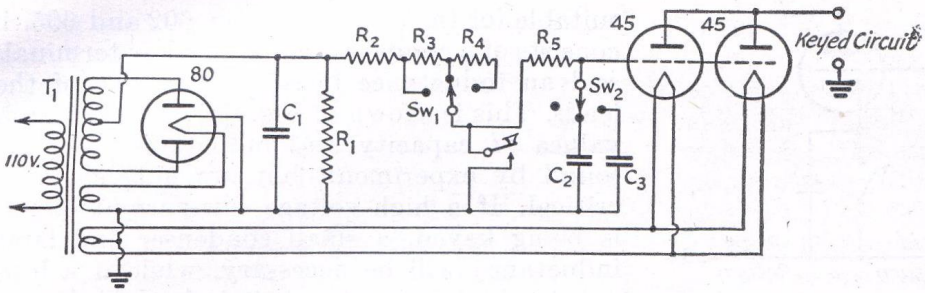

Fig. 608 — Vacuum-tube keyer circuit. The voltage drop across the tubes will be approximately 90 volts with the two type 45 tubes shown when the keyed current is 100 milliamperes. More tubes can be connected in parallel to reduce the drop. Suggested values are as follows:

C_1 — 2 μfd., 600-volt paper.
C_2 — 0.003-μfd. mica.
C_3 — 0.005-μfd. mica.
R_1 — 0.25 megohm.
R_2 — 50,000 ohms, 10-watt.
R_3, R_4 — 5 megohms.
R_5 — 0.5 megohm.
Sw_1, Sw_2 — 3-position 1-circuit rotary switch.
R_1 — 325 volts each side c.t., with 5-volt and 2.5-volt windings.

A wider range of lag adjustment may be obtained by using additional resistors and condensers. Suggested values of capacity, in addition to the above (C_2 and C_3), are 0.001 and 0.002 μfd. Resistors in addition to R_2 could be 2, 2, 3 and 5 megohms.

• 6-4 CHECKING TRANSMITTER KEYING

Clicks — Transmitter keying can be checked by listening to the signal on a superheterodyne receiver. The antenna should be disconnected so that the receiver does not overload and, if necessary, the r.f. gain can be reduced as well. Listening with the beat oscillator and a.v.c. off, the keying should be adjusted so that a slight click is heard as the key is closed, but practically none is heard as the key is released. When the keying constants have been adjusted to meet this condition, the clicks will be about optimum for all normal amateur work. If the clicks are too pronounced, they will cause interference with other amateurs and possibly to nearby broadcast receivers.

Chirps — Keying chirps (instability) may be checked by tuning in the signal or one of its harmonics on the highest frequency range of the receiver and listening with the b.f.o. on and the a.v.c. off. The gain should be sufficient to give moderate signal strength but it should be low enough to preclude the possibility of overloading. Adjust the tuning to give a low-frequency beat note and key the transmitter. Any chirp introduced by the keying adjustment will be readily apparent. By listening to a harmonic, the effect of any instability is magnified by the order of the harmonic and thus made more perceptible.

Oscillator keying — The keying of an amplifier is relatively straightforward and requires no special considerations other than those mentioned, but a few additional precautions are necessary with oscillator keying. Any oscillator, either self-excited or crystal, will key well if it will oscillate at low plate voltages (of the order of one or two volts) and if its change in frequency with plate-voltage changes is negligible. A crystal oscillator will oscillate at low plate voltages if a regenerative type of circuit such as the Tritet or grid-plate (§ 4-5) is used and if an r.f. choke is connected in series with the grid leak to reduce loading on the crystal. Crystal oscillators of this type are generally free from chirp unless there is a relatively large air-gap between the crystal and top plate of the holder, as is the case with a variable-frequency crystal set at the high-frequency end of its range.

Self-controlled oscillators can be made to meet the same requirements by using a high C/L ratio in the tank circuit, low plate and screen currents, and judicious adjustment of the feedback (§ 3-7). A self-controlled oscillator intended to be keyed should be designed for good keying rather than maximum output.

Stages following keying — When a keying filter is being adjusted, the stages following the keyed tube should be made inoperative by removing the plate voltage. This facilitates monitoring the keying without the introduction of additional effects. The following stages should then be added one at a time, checking the keying after each addition. An increase in click intensity (for the same carrier strength) indicates that the clicks are being added in the stages following the one which is keyed. The fixed bias on such stages should be sufficient to reduce the idling plate current (no excitation) to a low value but not to zero. Under these conditions any instability or tendency toward parasitic oscillations, either of which can adversely affect the keying characteristic, usually will evidence itself. It is particularly necessary that the transmitter be free from parasitic oscillations, since they can be the cause of key clicks which do not respond to the methods of treatment outlined in the preceding sections.

CHAPTER SEVEN

Receiver Principles and Design

• 7-1 ELEMENTS OF RECEIVING SYSTEMS

Basic requirements — The purpose of a radio receiving system is to abstract energy from passing radio waves and convert it into a form which conveys the intelligence contained in the signal. It must also be able to select a desired signal and eliminate those not wanted. The fundamental processes involved are amplification and detection.

Detection — The high frequencies used for radio signalling are well beyond the audio-frequency range (§ 2-7) and therefore cannot be used directly to actuate a loudspeaker. Neither can they be used to operate other devices, such as relays, by means of which a message might be transmitted. The process of converting a modulated radio-frequency wave to a usable low frequency, called *detection* or *demodulation*, is essentially that of rectification (§ 3-1). The modulated carrier (§ 5-1) is thereby converted to a unidirectional current the amplitude of which will vary at the same rate as the modulation. These low-frequency variations are readily applied to a headset, loudspeaker, or other form of electro-mechanical device.

Code signals — The dots and dashes of code (c.w.) transmissions are rectified as described, but in themselves can produce no audible tone in a headset or loudspeaker because they are of constant amplitude. For aural reception it is necessary to introduce a second radio frequency, differing from the signal frequency by a suitable audio frequency, into the detector circuit to produce an audible beat (§ 2-13). The frequency difference, and hence the *beat note*, is generally of the order of 500 to 1000 cycles since these tones are within the range of optimum response of both the ear and the headset. If the source of the second radio frequency is a separate oscillator the system is known as *heterodyne* reception; if the detector itself is made to oscillate and produce the second frequency, it is known as an *autodyne* detector.

Amplification — To build up weak signals to usable output level, modern receivers employ considerable amplification — often of the order of hundreds of thousands of times. Amplifiers are used at the frequency of the incoming signal (*r.f. amplifiers*), after detection (*a.f. amplifiers*) and, in the superheterodyne receiver, at one or more intermediate radio frequencies (*i.f. amplifiers*). The r.f. and i.f. amplifiers practically always employ tuned circuits.

Types of receivers — Receivers may vary in complexity from a simple detector with no amplification to multi-tube arrangements having amplification at several different radio frequencies as well as at audio frequency. A regenerative detector (§ 7-14) with or without audio frequency amplification is known as a *regenerative receiver;* if the detector is preceded by one or more tuned radio-frequency amplifier stages the combination is known as a *t.r.f.* (*tuned radio frequency*) *receiver*. The *superheterodyne receiver* (§ 7-8) employs r.f. amplification at a fixed intermediate frequency as well as at the frequency of the signal itself, the latter being converted by the heterodyne process to the intermediate frequency.

At ultra-high frequencies the superregenerative detector (§ 7-4), usually with audio amplification, is used in the *superregenerative receiver*,

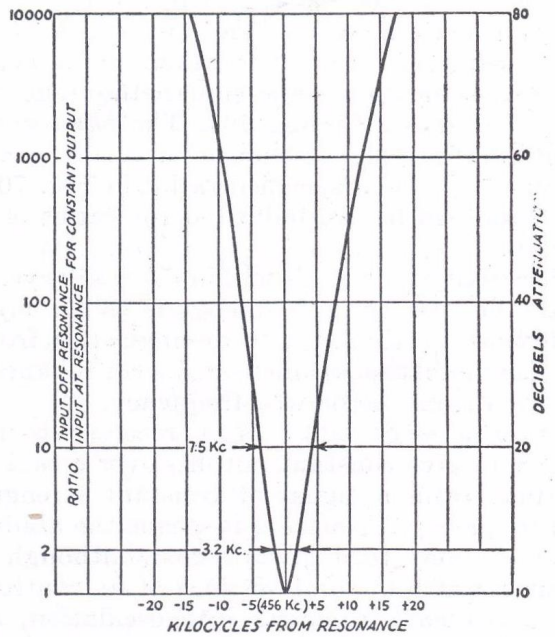

Fig. 701 — Selectivity curve of a modern superheterodyne receiver. The relative response is plotted against deviations above and below the resonance frequency. The scale at the left is in terms of voltage ratios; the corresponding decibel steps (§ 3-3) are shown at the right.

providing high amplification of weak signals with simple circuit arrangements.

• 7-2 RECEIVER CHARACTERISTICS

Sensitivity — Sensitivity is defined as the strength of the signal (usually expressed in microvolts) which must be applied to the input terminals of the receiver to produce a specified audio-frequency power output at the loudspeaker or headset. It is a measure of the amplification or gain.

Signal-to-noise ratio — Every receiver generates some noise of a hiss-like character, and signals weaker than the noise cannot be separated from it no matter how much amplification is used. This relation between noise and a weak signal is expressed by the *signal-to-noise* ratio. It can be defined in various ways, one simple one being to give it as the ratio of signal power output to noise output from the receiver at a specified value of modulated carrier voltage applied to the input terminals.

Since the noise is uniformly distributed over the whole spectrum, its effect will depend upon the selectivity of the receiver, greater selectivity giving smaller noise output and hence a higher signal-to-noise ratio.

Selectivity — Selectivity is the ability of a receiver to discriminate against signals of frequencies differing from that of the desired signal. The overall selectivity will depend upon the selectivity of the individual tuned circuits and the number of such circuits.

The selectivity of a receiver is shown graphically by drawing a curve which gives the ratio of signal strength required at various frequencies off resonance, to the signal strength at resonance, to give constant output. A *resonance curve* of this type (taken on a typical communications-type superheterodyne receiver) is shown in Fig. 701. The *band-width* is the width of the resonance curve (in cycles or kilocycles) at a specified ratio; in Fig. 701, the band-widths are indicated for ratios of 2 and 10.

Selectivity for signals within a few kilocycles of the desired signal frequency is called *adjacent-channel* selectivity, to distinguish it from the discrimination against signals considerably removed from the desired frequency.

Stability — Stability of a receiver is its ability to give constant output, over a period of time, from a signal of constant strength and frequency. Primarily, it means the ability to stay tuned to a given signal, although a receiver which at some settings of its controls has a tendency to break into oscillation, or "howl," is said to be unstable.

The stability of a receiver is affected principally by temperature variations, voltage changes, and constructional features of a mechanical nature.

Fidelity — Fidelity is the relative ability of the receiver to reproduce in its output the modulation (keying, 'phone, etc.) carried by the incoming signal. For exact reproduction, the band-width must be great enough to accommodate the highest modulation frequency, and the relative amplitudes of the various frequency components within the band must not be changed.

• 7-3 DETECTORS

Characteristics — The important characteristics of a detector are its sensitivity, fidelity or linearity, resistance, and signal-handling capability.

Detector *sensitivity* is the ratio of audio-frequency output to radio-frequency input. *Linearity* is a measure of the ability of the detector to reproduce, as an audio frequency, the exact form of the modulation on the incoming signal. The *resistance* or *impedance* of the detector is important in circuit design, since a relatively low resistance means that

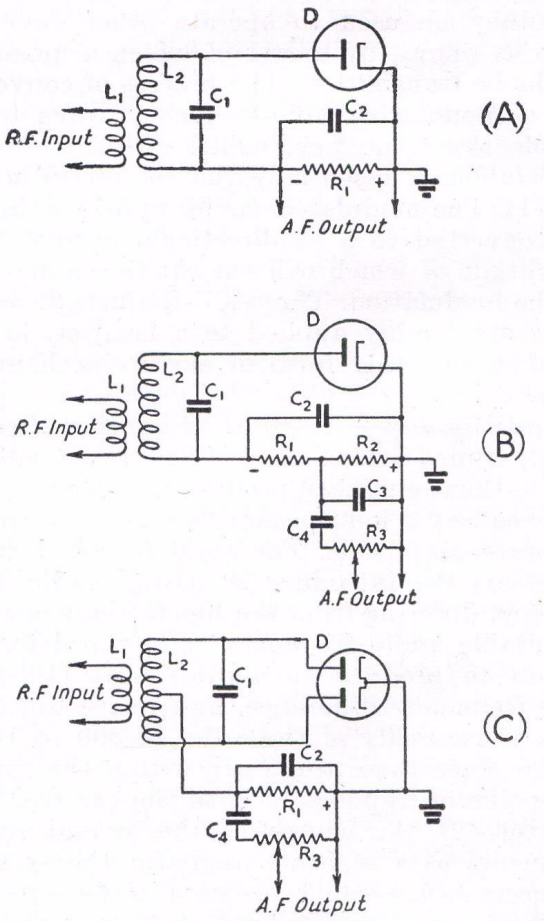

Fig. 702 — Simplified and practical diode detector circuits. A, the elementary half-wave diode detector; B, a practical cricuit, with r.f. filtering and audio output coupling; C, full-wave diode detector, with output coupling indicated. The circuit L_2C_1 is tuned to the signal frequency; typical values for C_2 and R_1 in A and C are 250 $\mu\mu$fd. and 250,000 ohms, respectively; in B, C_2 and C_3 are 100 $\mu\mu$fd. each; R_1, 50,000 ohms; and R_2, 250,000 ohms. C_4 is 0.1 μfd. and R_3, 0.5 to 1 megohm in all three diagrams.

power is consumed in the detector. The *signal-handling capability* means the ability of the detector to accept signals of a specified amplitude without overloading.

Diode detectors — The simplest detector is the diode rectifier. Circuits for both half-wave and full-wave (§ 8-3) diodes are given in Fig. 702. The simplified half-wave circuit at 702-A includes the r.f. tuned circuit L_2C_1, with a coupling coil L_1 from which the r.f. energy is fed to L_2C_1; the diode, D, and the load resistance R_1 and by-pass condenser C_2. The flow of rectified r.f. current through R_1 causes a d.c. voltage to develop across its terminals, and this voltage varies with the modulation on the signal. The − and + signs show the polarity of the voltage. Variation in amplitude of the r.f. signal with modulation causes corresponding variations in the value of the d.c. voltage across R_1. The load resistor, R_1, usually has a rather high value so that a fairly large voltage will develop from a small rectified-current flow.

In the circuit at 702-B, R_1 and C_2 have been divided for the purpose of filtering r.f. from the output circuit (§ 2-11); any r.f. voltage in the output may cause overloading of a succeeding amplifier tube. These audio-frequency variations can be transferred to another circuit through a coupling condenser, C_4 in Fig. 702, to a load resistor R_3, which usually is a "potentiometer" so that the volume can be adjusted to a desired level.

The full-wave diode circuit at 702-C is practically identical in operation to the half-wave circuit, except that both halves of the r.f. cycle are utilized. The full-wave circuit has the advantage that very little r.f. voltage appears across the load resistor, R_1, because the midpoint of L_2 is at the same potential as the cathode or "ground" for r.f.

The reactance of C_2 must be small compared to the resistance of R_1 at the radio frequency being rectified, but at audio frequencies must be relatively large compared to R_1 (§ 2-8, 2-13). This condition is satisfied by the values shown. If the capacity of C_2 is too large, the response at the higher audio frequencies will be low.

Compared with other detectors, the sensitivity of the diode is low. Since the diode consumes power, the Q of the tuned circuit is reduced, bringing about a reduction in selectivity (§ 2-10). The linearity is good, however, and the signal-handling capability is high.

Grid-leak detectors — The grid-leak detector is a combination diode rectifier and audio-frequency amplifier. In the circuit of Fig. 703-A, the grid corresponds to the diode plate, and the rectifying action is exactly the same. The d.c. voltage from rectified current flow through the grid leak, R_1 biases the grid negatively with respect to cathode, and the

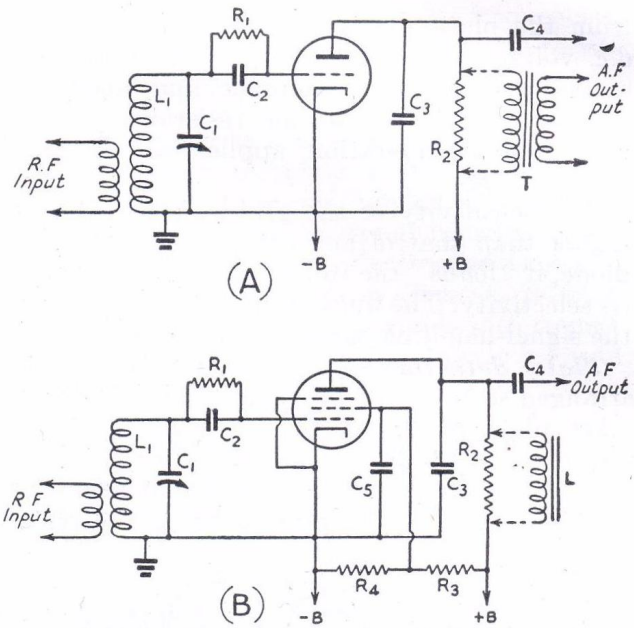

Fig. 703 — Grid-leak detector circuits, A, triode; B, pentode. A tetrode may be used in the circuit of B by neglecting the suppressor-grid connection. Transformer coupling may be substituted for resistance coupling in A, or a high-inductance choke may replace the plate resistor in B. L_1C_1 is a circuit tuned to the signal frequency. The grid leak, R_1, may be connected directly from grid to cathode instead of across the grid condenser as shown. The operation with either connection will be the same. Representative values are:

Component	*Circuit A*	*Circuit B*
C_2	100 to 250 μμfd.	100 to 250 μμfd.
C_3	0.001 to 0.002 μfd.	250 to 500 μμfd.
C_4	0.1 μfd.	0.1 μfd.
C_5		0.5 μfd. or larger.
R_1	1 to 2 megohms.	1 to 5 megohms.
R_2	50,000 ohms.	100,000 to 250,000 ohms.
R_3		50,000 ohms.
R_4		20,000 ohms.
T	Interstage audio transformer.	
L		500-henry choke.

The plate voltage in A should be about 50 volts for best sensitivity. In B the screen voltage should be about 30 volts, plate voltage from 100 to 250.

audio-frequency variations in voltage across R_1 are amplified through the tube just as in a normal a.f. amplifier. In the plate circuit, R_2 is the plate load resistance (§ 3-3) and C_3 a by-pass condenser to eliminate r.f. in the output circuit. C_4 is the output coupling condenser. With a triode, the load resistor R_2 may be replaced by an audio transformer, T, as shown, in which case C_4 is not used.

Since audio amplification is added to rectification, the grid-leak detector has considerably greater sensitivity than the diode. The sensitivity can be further increased by using a screen-grid tube instead of a triode, as at 703-B. The operation is equivalent to that of the triode circuit. C_5, the screen by-pass condenser, should have low reactance (§ 2-8, 2-13) for both radio and audio frequencies. R_3 and R_4 constitute a voltage divider (§ 8-10)

from the plate supply to furnish the proper d.c. voltage to the screen. In both circuits, C_2 must have low r.f. reactance and high a.f. reactance compared to the resistance of R_1; the same consideration applies to C_3 with respect to R_2.

The sensitivity of the grid-leak detector is higher than that of any other type. Like the diode, it "loads" the tuned circuit and reduces its selectivity. The linearity is rather poor, and the signal-handling capability is limited.

Plate detectors — The plate detector is arranged so that rectification of the r.f. signal takes place in the plate circuit of a triode, tetrode or pentode, as contrasted to the grid rectification just described. Sufficient negative bias is applied to the grid to bring the plate current nearly to the cut-off point, so that the application of a signal to the grid circuit causes an increase in average plate current. The average plate current follows the changes in signal amplitude in a fashion similar to the rectified current in a diode detector.

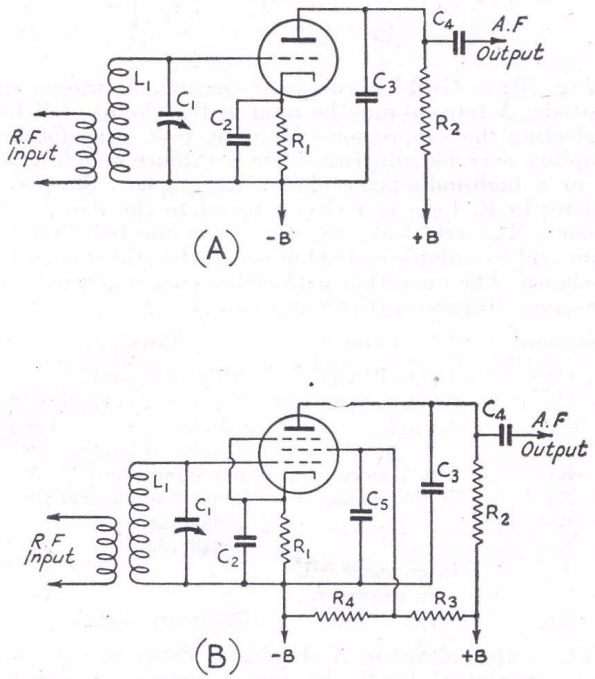

Fig. 704 — Circuits for plate detection. A, triode; B, pentode. L_1C_1 is tuned to the signal frequency. Typical values for other constants are:

Component	*Circuit A*	*Circuit B*
C_2	0.5 μfd. or larger.	0.5 μfd. or larger.
C_3	0.001 to 0.002 μfd.	250 to 500 μμfd.
C_4	0.1 μfd.	0.1 μfd.
C_5		0.5 μfd. or larger.
R_1	10,000 to 20,000 ohms.	10,000 to 20,000 ohms.
R_2	50,000 to 100,000 ohms.	100,000 to 250,000 ohms
R_3		50,000 ohms.
R_4		20,000 ohms.

Plate voltages from 100 to 250 volts may be used. Screen voltage in B should be about 30 volts.

Circuits for triodes and pentodes are given in Fig. 704. C_3 is the plate by-pass condenser, R_1 is the cathode resistor which provides the operating grid bias (§ 3-6), and C_2 is a by-pass, for both radio and audio frequencies, across R_1 (§ 2-13). R_2 is the plate load resistance (§ 3-3) across which a voltage appears as a result of the rectifying action described above. C_4 is the output coupling condenser. In the pentode circuit at B, R_3 and R_4 form a voltage divider to supply the proper potential (about 30 volts) to the screen, and C_5 is a by-pass condenser between the screen and cathode. C_5 must have low reactance for both radio and audio frequencies.

The plate detector is more sensitive than the diode, since there is some amplifying action in the tube, but less so than the grid-leak detector. It will handle considerably larger signals than the grid-leak detector, but is not quite as tolerant in this respect as the diode. Linearity, with the self-biased circuits shown, is good. Up to the overload point, the detector takes no power from the tuned circuit and hence does not affect its Q and selectivity (§ 2-10).

Infinite impedance detector — The circuit of Fig. 705 combines the high signal-handling capabilities of the diode detector with low distortion (good linearity) and, like the plate detector, does not load the tuned circuit to which it is connected. The circuit resembles that of the plate detector except that the load resistance, R_1, is connected between cathode and ground and is thus common to both grid and plate circuits, giving negative feedback for the audio frequencies. The cathode resistor is by-passed for r.f. (C_1) but not for audio (§ 2-13), while the plate circuit is by-passed

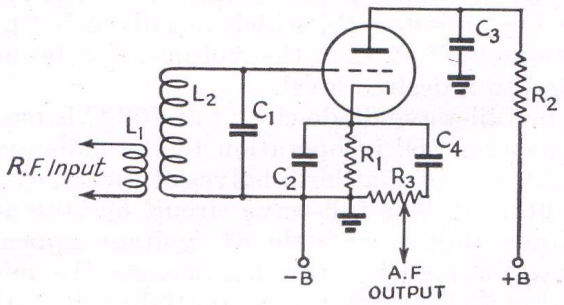

Fig. 705 — The infinite impedance detector. L_2C_1 is tuned to the signal frequency. Typical values for other constants are:
C_2 — 250 μμfd.
C_3 — 0.5 μfd.
C_4 — 0.1 μfd.
R_1 — 0.15 megohm.
R_2 — 25,000 ohms.
R_3 — 0.25-megohm volume control.
A tube having a medium amplification factor (about 20) should be used. The plate voltage should be 250 volts.

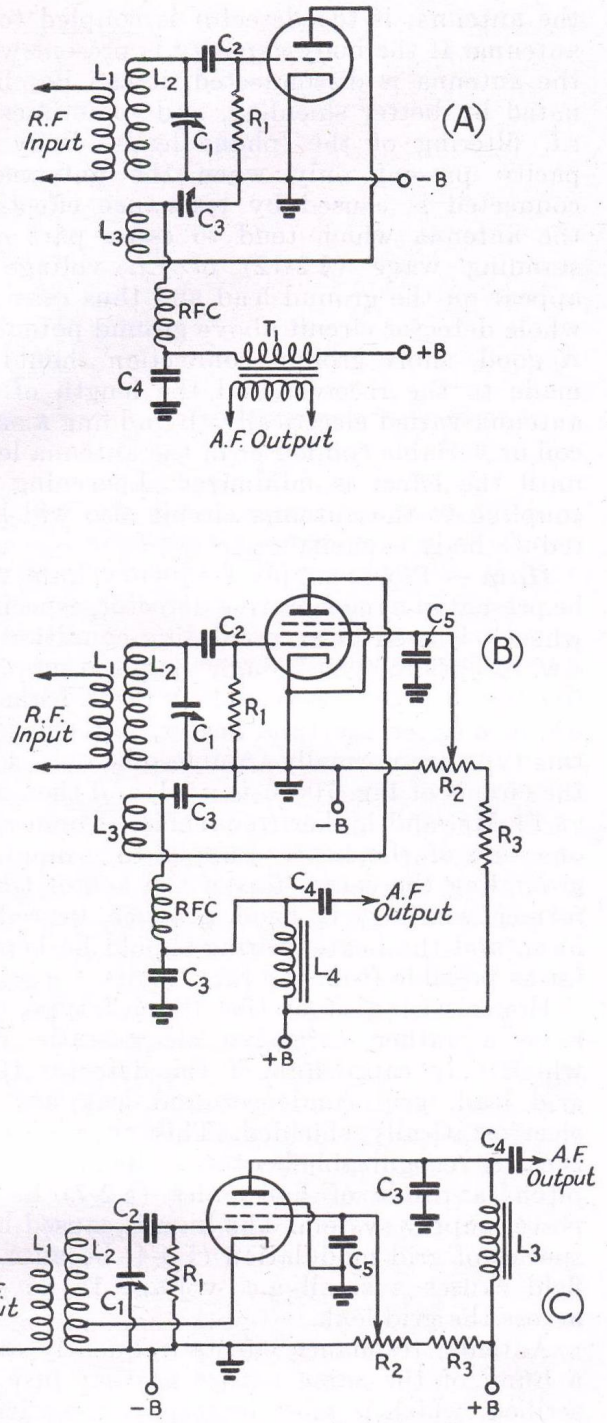

Fig. 706 — Triode and pentode regenerative detector circuits. The circuit L_2C_1 is tuned to the signal frequency. The grid condenser, C_2, should have a value of about 100 $\mu\mu$fd. in all circuits; the grid leak, R_1, may range in value from 1 to 5 megohms. The tickler coil, L_3, will ordinarily have from 10% to 25% of the number of turns on L_2; in C, the cathode tap is about 10% of the number of turns on L_2 above ground. Regeneration control condenser C_3 in A should have a maximum capacity of 100 $\mu\mu$fd. or more; by-pass condensers C_3 in B and C are likewise 100 $\mu\mu$fd. C_5 is ordinarily 1 μfd. or more; R_2, 50,000-ohm potentiometer; R_3, 50,000 to 100,000 ohms. L_4 in B (L_3 in C) is a 500-henry inductance, C_4 is 0.1 μfd. in both circuits. T_1 in A is a conventional audio transformer for coupling from the plate of a tube to a following grid. RFC is 2.5 mh.

In A, the plate voltage should be of the order of 50 volts for best sensitivity. The pentode circuits require about 30 volts on the screen; plate voltage may be from 100 to 250 volts.

to ground for both audio and radio frequencies. R_2 with C_2 forms an RC filter (§ 2-11) to isolate the plate from the "B" supply at audio frequencies.

The plate current is very low at no signal, increasing with signal as in the case of the plate detector. The voltage drop across R_1 similarly increases with signal because of the increased plate current. Because of this and the fact that the initial drop across R_1 is large, the grid cannot be driven positive with respect to the cathode by the signal, hence no grid current can be drawn.

• 7-4 REGENERATIVE DETECTORS

Circuits — By providing controllable r.f. feedback or regeneration (§ 3-3) in a triode or pentode detector circuit, the incoming signal can be amplified many times, thereby greatly increasing the sensitivity of the detector. Regeneration also increases the effective Q of the circuit and hence increases the selectivity (§ 2-10), by virtue of the fact that the maximum regenerative amplification takes place at only the frequency to which the circuit is tuned. The grid-leak type of detector is most suitable for the purpose. Except for the regenerative connection, the circuit values are identical with those previously described for this type of detector, and the same considerations apply.

Fig. 706 shows the circuits of regenerative detectors of various types. The circuit of A is for a triode tube, with a variable by-pass condenser, C_3, in the plate circuit to control regeneration. When the capacity is small the tube does not regenerate, but as it increases toward maximum its reactance (§ 2-8) becomes smaller until a critical value is reached where there is sufficient feed-back to cause oscillation. If L_2 and L_3 are wound end to end in the same direction, the plate connection is to the outside of the plate or "tickler" coil, L_3, when the grid connection is to the outside of the tuned circuit coil, L_2.

The circuit of B is for a screen-grid tube, regeneration being controlled by adjustment of the screen-grid voltage. The tickler, L_3, is in the plate circuit. The portion of the control resistor between the rotating contact and ground is by-passed by a large condenser (0.5 μfd. or more) to filter out scratching noise when the arm is rotated (§ 2-11). The feedback should be adjusted by varying the number of turns on L_3 or the coupling (§ 2-11) between L_2 and L_3 so that the tube just goes into oscillation at a screen voltage of approximately 30 volts.

Circuit C is identical with B in principle of operation, except that the oscillating circuit is of the Hartley type (§ 3-7). Since the screen and plate are in parallel for r.f. in this circuit,

only a small amount of "tickler" — that is, relatively few turns between cathode tap and ground — is required for oscillation.

Adjustment for smooth regeneration — The ideal regeneration control would permit the detector to go into and out of oscillation smoothly, would have no effect on the frequency of oscillation, and would give the same value of regeneration regardless of frequency and the loading on the circuit. In practice the effects of loading, particularly the loading that occurs when the detector circuit is coupled to an antenna, are difficult to overcome. Likewise, the regeneration is affected by the frequency to which the grid circuit is tuned.

In all circuits it is best to wind the tickler at the ground or cathode end of the grid coil, and to use as few turns on the tickler as will allow the detector to oscillate easily over the whole tuning range with the proper plate (and screen, if a pentode) voltage. Should the tube break into oscillation suddenly, making a click, as the regeneration control is advanced, the operation can frequently be made smooth by changing the grid-leak resistance to a higher or lower value. The wrong grid leak plus too-high plate and screen voltage are the most frequent causes of lack of smoothness in going into oscillation.

Antenna coupling — If the detector is coupled to an antenna, slight changes in the antenna constants (as when the wire swings in a breeze) affect the frequency of the oscillations generated, and thereby the beat frequency when c.w. signals are being received. The tighter the antenna coupling is made, the greater will be the feedback required or the higher will be the voltage necessary to make the detector oscillate. The antenna coupling should be the maximum that will allow the detector to go into oscillation smoothly with the correct voltages on the tube. If capacity coupling (§ 2-11) to the grid end of the coil is used, only a very small amount of capacity will be needed to couple to the antenna. Increasing the capacity increases the coupling.

At frequencies where the antenna system is resonant the absorption of energy from the oscillating detector circuit will be greater, with the consequence that more regeneration is needed. In extreme cases it may not be possible to make the detector oscillate with normal voltages, causing so-called "dead spots". The remedy for this is to loosen the antenna coupling to the point which permits normal oscillation and smooth regeneration control.

Body capacity — A regenerative detector occasionally shows a tendency to change frequency slightly as the hand is moved near the dial. This condition (*body capacity*) can be caused by poor design of the receiver or by the antenna, if the detector is coupled to an antenna. If the body capacity is present when the antenna is disconnected, it can be eliminated by better shielding, and sometimes by r.f. filtering of the 'phone leads. Body capacity present only when the antenna is connected is caused by resonance effects in the antenna which tend to cause part of a standing wave (§ 2-12) of r.f. voltage to appear on the ground lead and thus raise the whole detector circuit above ground potential. A good, short ground connection should be made to the receiver and the length of the antenna varied electrically (by adding a small coil or variable condenser in the antenna lead) until the effect is minimized. Loosening the coupling to the antenna circuit also will help reduce body capacity.

Hum — Power-supply frequency hum may be present in a regenerative detector, especially when it is used in an oscillating condition for c.w. reception, even though the plate supply is free from ripple (§ 8-4). It may result from the use of a.c. for the tube heater, but effects of this type are normally troublesome only when the circuit of Fig. 706-C is used, and then only at 14 Mc. and higher frequencies. Connecting one side of the heater supply to ground, or grounding the center-tap of the heater transformer winding, is good practice to reduce hum, and the heater wiring should be kept as far as possible from the r.f. circuits.

House wiring, if of the "open" type, will have a rather extensive electrostatic field which may cause hum if the detector tube, grid lead, grid condenser and leak are not electrostatically shielded. This type of hum is easily recognizable because of its rather high pitch, a result of harmonics (§ 2-7) in the power-supply system. The hum is caused by a species of grid modulation (§ 5-4) because the field causes a small a.c. voltage to develop across the grid leak.

Antenna resonance effects frequently cause a hum, of the same nature as that just described, which is most intense at the various resonance points and hence varies with tuning. For this reason it is called tunable hum. It is prone to occur with a rectified a.c. plate supply (§ 8-1) when a standing wave effect of the type described in the preceding paragraph occurs, and is associated with the non-linearity of the rectifier tube in the plate supply. Elimination of antenna resonance effects and by-passing the rectifier plates to cathode usually will cure it.

Tuning — For c.w. reception, the regeneration control is advanced until the detector breaks into a "hiss," which indicates that the detector is oscillating. Further advancing of the regeneration control after the detector starts oscillating will result in a slight decrease

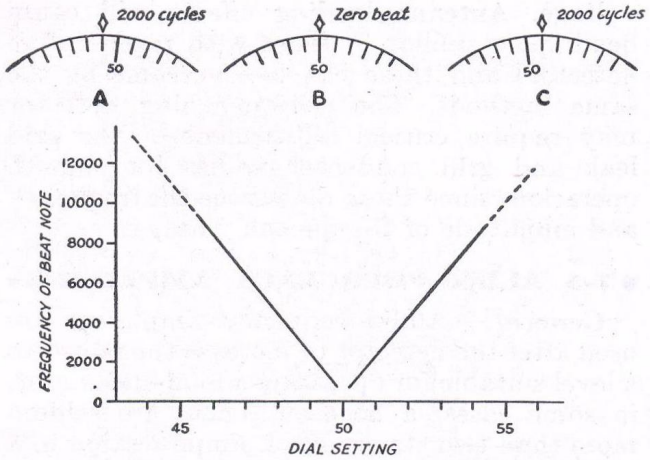

Fig. 707 — As the tuning dial of a receiver is turned past a c.w. signal, the beat note varies from a high tone down through "zero beat" (no audible frequency difference) and back up to a high tone, as shown at A, B and C. The curve is a graphical representation of the action. The beat exists past 8000 or 10,000 cycles but usually is not heard because of the limitations of the audio system of the receiver.

in the strength of the hiss, indicating that the sensitivity is decreasing.

The proper adjustment for the reception of c.w. signals is just after the detector has started to oscillate, when it will be found that c.w. signals can be tuned in and will give a tone with each signal depending on the setting of the tuning control. As the receiver is tuned through a signal, the tone will first be heard as a very high pitch, go down through "zero beat" and then disappear at a high pitch on the other side, as shown in Fig. 707. It will be found that a low-pitched beat-note cannot be obtained with a strong signal because the detector "pulls in" or "blocks," but this condition can be corrected by advancing the regeneration control until the beat-note occurs again. If the regenerative detector is preceded by an r.f. amplifier stage, the blocking can be eliminated by reducing the gain of the r.f. stage. If the detector is coupled to an antenna the blocking condition can be eliminated by advancing the regeneration control or loosening the antenna coupling.

The point just after the receiver starts oscillating is the most sensitive condition for c.w. reception — further advancing of the regeneration control makes the receiver less prone to blocking by strong signals but less capable of receiving weak signals.

If the receiver is in the oscillating condition and a 'phone signal is tuned in, a steady beat-note will result and, while it is possible to listen to 'phone if the receiver can be tuned to exact zero beat, it is more satisfactory to reduce the regeneration to the point just before the receiver goes into oscillation. This is the most sensitive operating point for this type of reception.

Superregeneration — The limit to which ordinary regenerative amplification can be carried is the point at which oscillations commence, since at that point further amplification ceases. The *superregenerative* detector overcomes this limitation by introducing into the detector circuit an alternating voltage of a frequency somewhat above the audible range (of the order of 20 to 100 kilocycles) in such a way as to vary the detector's operating point (§ 3-3). As a consequence of the introduction of this *quench* or *interruption* frequency the detector can oscillate only when the varying operating point is in a region suitable for the production of oscillations. Because the oscillations are constantly being interrupted the regeneration can be greatly increased and the signal will build up to relatively tremendous proportions. The superregenerative circuit is suitable only for the reception of modulated signals, and operates best on ultra-high frequencies where it has found considerable application in simple receivers.

A typical superregenerative circuit for ultra-high frequencies is shown in Fig. 708. The regenerative detector circuit is an ultraudion oscillator (§ 3-7). The quench frequency, obtained from the separate quench oscillator, is

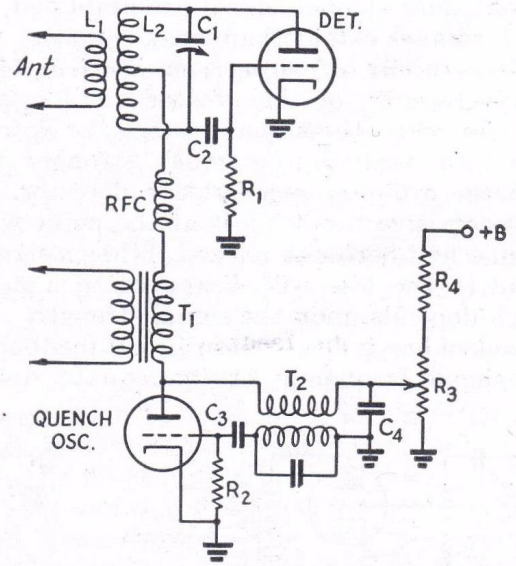

Fig. 708 — Superregenerative detector circuit with separate quench oscillator. L_2C_1 is tuned to the signal frequency. Typical values for other components are as follows:

C_2 — 100 $\mu\mu$fd.
C_3 — 500 $\mu\mu$fd.
C_4 — 0.1 μfd.
R_1 — 5 megohms.
R_2 — 50,000 ohms.
R_3 — 50,000-ohm potentiometer.
R_4 — 50,000 ohms.
T_1 — Audio transformer, plate-to-grid type.
RFC — Radio-frequency choke, constants depending upon frequency of operation. Special low-capacity chokes are required for ultra-high frequencies.

introduced in the plate circuit. Many other circuit arrangements are possible.

If regeneration in an ordinary regenerative circuit is carried sufficiently far, the circuit will break into a low-frequency oscillation simultaneously with that at the operating radio frequency. This low-frequency oscillation has much the same quenching effect as that from a separate oscillator, hence a circuit so operated is called a *self-quenching* superregenerative detector. This type of circuit is more successful at ultra-high than at ordinary communication frequencies. The frequency of the quench oscillation depends upon the feedback and upon the time constant of the grid leak and condenser, the oscillation being a form of "blocking" or "squegging" in which the grid accumulates a strong negative charge which cannot leak off rapidly enough through the grid leak to prevent a relatively slow variation of the operating point.

The superregenerative detector has little selectivity, but discriminates against noise such as that from automobile ignition systems. It also has marked automatic volume control action, since strong signals are amplified to a much smaller extent than weak signals.

Adjustment of superregenerative detectors — Because of the greater amplification, the hiss when the superregenerative detector goes into oscillation is much stronger than with the ordinary regenerative detector. The most sensitive condition is at the point where the hiss first becomes marked. When a signal is tuned in the hiss will disappear to a degree which depends upon the signal strength.

Lack of hiss indicates insufficient feedback at the signal frequency or inadequate quench voltage. Antenna loading effects will cause dead spots similar to those with regenerative detectors and these can be overcome by the same methods. The self-quenching detector may require critical adjustment of the grid leak and grid condenser values for smooth operation, since these determine the frequency and amplitude of the quench voltage.

• 7-5 AUDIO-FREQUENCY AMPLIFIERS

General — Audio-frequency amplifiers are used after the detector to increase the power to a level suitable for operating a loud-speaker or, in some cases, a headset. There are seldom more than two stages of a.f. amplification in a receiver, and often only one.

In all except battery-operated receivers, the negative grid bias of audio amplifiers is usually secured from the voltage drop in a cathode resistor (§ 3-6). The cathode resistor must be bypassed by a condenser having low reactance, at the lowest audio frequency to be amplified, compared to the resistance of the cathode resistor (10% or less) (§ 2-8, 2-13). In battery-operated sets, a separate grid-bias battery generally is used.

Headset and voltage amplifiers — The circuits shown in Fig. 709 are typical of those used for voltage amplification and for providing sufficient power for operation of headphones (§ 3-3). Triodes usually are preferred to pentodes because they are better suited to working into an audio transformer or headset, which have impedances of the order of 20,000 ohms.

In these circuits, R_2 is the cathode bias resistor and C_1 the cathode by-pass condenser. R_1, the grid resistor, gives volume control

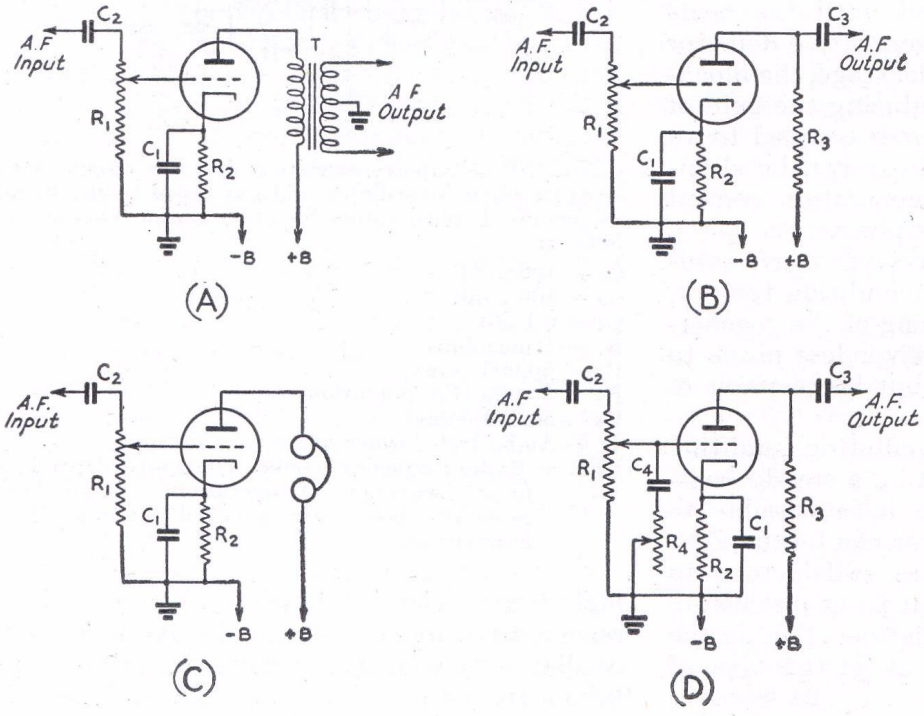

Fig. 709 — Audio amplifier circuits for voltage amplification and headphone output. The tubes are operated as Class-A amplifiers (§ 3-4).

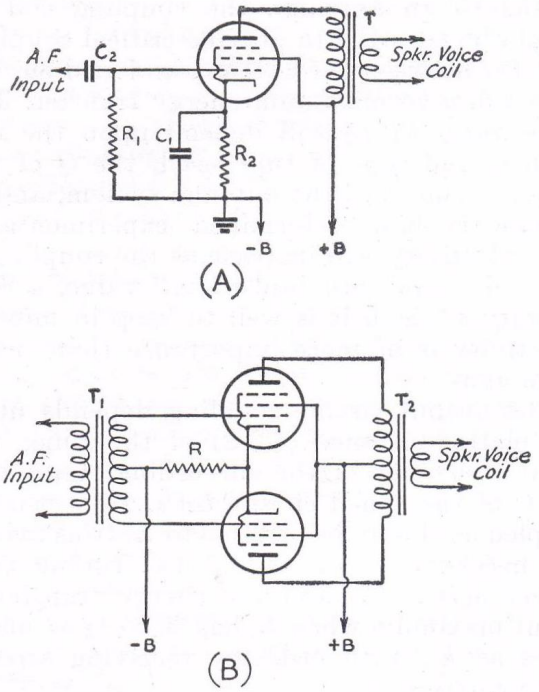

Fig. 710 — Audio power output amplifier circuits. Class A or AB (§ 3-4) amplification is used.

action (§ 5-9). Its value ordinarily is from 0.25 to 1 megohm. C_2 is the input coupling condenser, already discussed under detectors; it is, in fact, identical to C_4 in Figs. 703 and 704 if the amplifier is coupled to a detector.

Power amplifiers — A popular type of power amplifier is the single pentode; the circuit diagram is given in Fig. 710-A. The grid resistor, R_1, may be a potentiometer for volume control as shown at R_1 in Fig. 709. The output transformer T should have a turns ratio (§ 2-9) suitable for the speaker used; most of the small speakers now available are furnished complete with output transformer.

When greater volume is needed a pair of pentodes or tetrodes may be connected in push-pull (§ 3-3) as shown in Fig. 710-B. Transformer coupling to the voltage-amplifier stage is the simplest method of obtaining push-pull input for the amplifier grids. The interstage transformer, T_1, has a center-tapped secondary, with a secondary-to-primary turns ratio of about 2 to 1. An output transformer, T_2, with a center-tapped primary must be used. No by-pass condenser is needed across the cathode resistor, R, since the a.f. current does not flow through the resistor as it does in single-tube circuits.

Tone control — A tone control is a device for changing the frequency response (§ 3-3) of an audio amplifier; usually it is simply a method for reducing high-frequency response. This is helpful in reducing hissing and crackling noises without disturbing the intelligibility of the signal. R_4 and C_4 together in Fig. 709-D form an effective tone control of this type. The maximum effect is secured when R_4 is entirely out of the circuit, leaving C_4 connected between grid and ground. R_4 should be large enough compared to the reactance of C_4 (§ 2-8) so that when it is all in circuit the effect of C_4 on the frequency response is negligible.

• 7-6 RADIO-FREQUENCY AMPLIFIERS

Circuits — Although there are variations in detail, practically all r.f. amplifiers conform to the basic circuit shown in Fig. 711. A screen-grid tube, usually a pentode, is invariably used, since a triode will oscillate when its grid and plate circuits are tuned to the same frequency (§ 3-5). The amplifier operates Class A, without grid current (§ 3-4). The tuned grid circuit, L_1C_1, is coupled through L_2 to the antenna (or, in some cases, to a preceding stage). R_1 and C_2 are the cathode bias resistor and cathode by-pass condenser, C_3 the screen by-pass condenser, and R_2 the screen dropping resistor. L_3 is the primary of the output transformer (§ 2-11), tightly coupled to L_4 which, with C_5, constitutes the tuned circuit feeding the detector or a following amplifier tube. L_1C_1 and L_4C_5 are both tuned to the frequency of the incoming signal.

Shielding — The screen-grid construction prevents feedback (§ 3-3) from plate to grid inside the tube, but in addition it is necessary to prevent transfer of energy from the plate circuit to the grid circuit external to the tube. This is accomplished by enclosing the coils in grounded shielding containers, and by keeping the plate and grid leads well separated. With "single-ended" tubes care in laying out the wiring to obtain the maximum possible physical separation between plate and grid leads is necessary to prevent capacity coupling.

The shield around a coil will reduce the inductance and Q of the coil (§ 2-11) to an extent which depends upon the shielding material and its distance from the coil. Adjustments to the inductance therefore must be made with the shield in place.

By-passing — In addition to shielding, good by-passing (§ 2-13) is imperative. This is not simply a matter of choosing the proper type

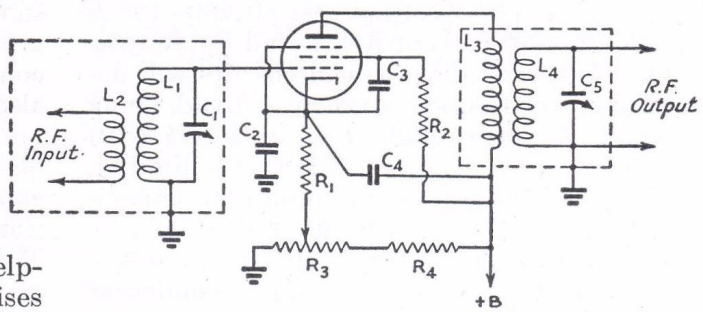

Fig. 711 — The circuit of a tuned radio-frequency amplifier. Circuit values are discussed in the text.

and capacity of by-pass condenser. Short *separate* leads from C_3 and C_4 to cathode or ground are a prime necessity, since at the higher radio frequencies even an inch or two of wire will have enough inductance to provide feedback coupling, and hence cause oscillation, if the wire happens to be common to both the plate and grid circuits.

Gain control — The gain of an r.f. amplifier usually is varied by varying the grid bias. This method is applicable only to variable-μ type tubes (§ 3-5) hence this type usually is found in r.f. amplifiers. In Fig. 711, R_3 and R_4 comprise the gain-control circuit. R_3 is the control resistor (§ 3-6) and R_4 a dropping resistor of such value as to make the voltage across the outside terminals of R_3 about 50 volts (§ 8-10). The gain is maximum with the variable arm all the way to the left (grounded) on R_3 and minimum at the right. R_3 could simply be placed in series with R_1, omitting R_4 entirely, but the range of control is limited when this connection is used.

In a multi-tube receiver, the gain of several stages would be varied simultaneously, a single control sufficing for all. In such a case, the lower ends of the several cathode resistors (R_1) would be connected together and to the movable contact on R_3.

Circuit values — The value of the cathode resistor, R_1, should be calculated for the *minimum* recommended bias for the tube used. The capacities of C_2, C_3 and C_4 must be such that the reactance is low at radio frequencies; this condition is easily met by using 0.01-μfd. condensers at communication frequencies, or 0.001 to 0.002 mica units at ultra-high frequencies up to 112 Mc. R_2 is found by taking the difference between the recommended plate and screen voltages, then substituting this and the rated screen current in Ohm's Law (§ 2-6). R_3 must be selected on the basis of the number of tubes to be controlled; a resistor must be chosen which is capable of carrying, at its low-resistance end, the sum of all the tube currents plus the bleeder current. A resistor of suitable current-carrying capacity being found, the bleeder current necessary to produce a drop through it of about 50 volts can be calculated by Ohm's Law. The same formula will give R_4, using the plate voltage less 50 volts for E and the bleeder current just found for I.

The constants of the tuned circuits will depend upon the frequency range, or band, being covered. A fairly high L/C ratio (§ 2-10) should be used on each band; this is limited, however, by the irreducible minimum capacities. An allowance of 10 to 20 $\mu\mu$fd. should be made for tube and stray capacity, and the minimum capacity of the tuning condenser also must be added.

If the input circuit of the amplifier is connected to an antenna, the coupling coil L_2 should be adjusted to provide critical coupling (§ 2-11) between the antenna and grid circuit. This will give maximum energy transfer. The turns ratio L_1/L_2 will depend upon the frequency, the type of tube used, the Q of the tuned circuit, and the antenna system, and in general is best determined experimentally. The selectivity will increase as the coupling is reduced below this "optimum" value, a consideration which it is well to keep in mind if selectivity is of more importance than maximum gain.

The output circuit coupling depends upon the plate resistance (§ 3-2) of the tube, the input resistance of the succeeding stage, and the Q of the tuned circuit L_4C_5. L_3 is usually coupled as closely as possible to L_4 (this avoids the necessity for an additional tuning condenser across L_3) and the energy transfer is about maximum when L_3 has $\frac{2}{3}$ to $\frac{4}{5}$ as many turns as L_4, with ordinary receiving screen-grid pentodes.

Tube and circuit noise — In any conductor electrons will be moving in random directions simultaneously and, as a result, small irregular voltages are developed across the conductor terminals. The voltage is larger the greater the resistance of the conductor and the higher its temperature. This is known as the *thermal agitation* effect, and it produces a hiss-like noise voltage distributed uniformly throughout the radio-frequency spectrum. The thermal agitation noise voltage appearing across the terminals of a tuned circuit will be the same as in a resistor of a value equal to the parallel impedance of the tuned circuit (§ 2-10) even though the actual circuit resistance is low. Hence the higher the Q of the circuit the greater the thermal agitation noise.

Another component of hiss noise is developed in the tube, because the rain of electrons on the plate is not entirely uniform. Small irregularities caused by gas in the tube also contribute to the effect. Tube noise varies with the type of tube, and is proportional in a general way to the inverse ratio of the mutual conductance (§ 3-2) of the tube to the square root of the plate current.

To obtain the best signal-to-noise ratio, the signal must be made as large as possible at the grid of the tube, which means that the antenna coupling must be adjusted to that end, and also that the Q of the grid tuned circuit must be high. A tube with low inherent noise obviously should be chosen. In an amplifier having good signal-to-noise ratio the thermal agitation noise will be greater than the tube noise. This can easily be checked by grounding the grid through a 0.01-μfd. condenser and observing whether there is a decrease in noise. If there is no change, the tube noise is greatly

predominant, indicating a poor signal-to-noise ratio in the stage. The test is valid only if there is no regeneration in the amplifier. The signal-to-noise ratio will decrease as the frequency is raised because it becomes increasingly difficult to obtain a tuned circuit of high effective Q (§ 7-7).

The first stage of the receiver is the important one from the signal-to-noise ratio standpoint. Noise generated in the second and subsequent stages, while comparable in magnitude to that generated in the first, is masked by the amplified noise and signal from the first stage. After the second stage, further contributions by tubes and circuits to the total noise are inconsequential in any normal receiver.

Tube input resistance — At high frequencies the tube may consume power from the tuned grid circuit even though the grid is not driven positive by the signal. Above 7 Mc. all tubes load the tuned circuit to an extent which depends upon the type of tube. This effect comes about because the time necessary for electrons to travel from the cathode to the grid becomes comparable to the time of one r.f. cycle, and because of a degenerative effect (§ 3-3) of the cathode lead inductance. With certain tube types the input resistance may be as low as a few thousand ohms at 28 Mc. and as low as a few hundred ohms at ultra-high frequencies.

This *input loading* effect is in addition to the normal decrease in the Q of the circuit alone at the higher frequencies because of increased losses in the coil and condenser. Thus the selectivity and gain of the circuit are both adversely affected.

Comparison of tubes — At 7 Mc. and lower frequencies, the signal-to-noise ratio, gain and selectivity of an r.f. amplifier stage are sufficiently high with any of the standard receiving tubes. At 14 Mc. and higher, however, this is no longer true, and the choice of a tube must be based on several conflicting considerations.

Gain is highest with high mutual-conductance pentodes, the 1851 and 1852 being examples of this type. These tubes also develop less noise than any of the others. The input-loading effect is greatest with them, however, so that selectivity is decreased and the tuned-circuit gain is lowered.

Pentodes such as the 6K7, 6J7 and corresponding types in glass have lesser input-loading effects at high frequencies, moderate gain, and relatively-high inherent noise.

The "acorn" and equivalent miniature pentodes are excellent from the input-loading standpoint, the gain is about the same as with the standard types, and the inherent noise is somewhat lower.

Where selectivity is paramount, the acorns are best, standard pentodes second, and the 1851–52 types last. On signal-to-noise ratio the 1851–52 tubes are first, acorns second, and standard pentodes third. The same order holds for overall gain.

At 56 Mc. the standard types are usable, but acorns are capable of better performance because of lesser loading. The 954, 956 and the corresponding types 9001 and 9003 are the only usable types for r.f. amplification at 112 Mc. and higher.

● 7-7 TUNING AND BAND-CHANGING METHODS

Band changing — The resonant circuits which are tuned to the frequency of the incoming signal constitute a special problem in the design of amateur receivers since the amateur frequency assignments consist of groups or bands of frequencies at widely-spaced intervals. The same LC combination cannot be used for, say, 14 Mc. to 3.5 Mc., because of the impracticable maximum-minimum capacity ratio required, and also because the tuning would be excessively critical with such a large frequency range. It is necessary, therefore, to provide a means for changing the circuit constants for various frequency bands. As a matter of convenience, the same tuning condenser usually is retained, but new coils are inserted in the circuit for each band.

There are two favorite methods of changing inductances; one is to use a switch, having an appropriate number of contacts, which connects the desired coil and disconnects the others. The second is to use coils wound on forms with contacts (usually pins) which can be inserted in and removed from a socket.

Band spreading — The tuning range of a given coil and variable condenser will depend

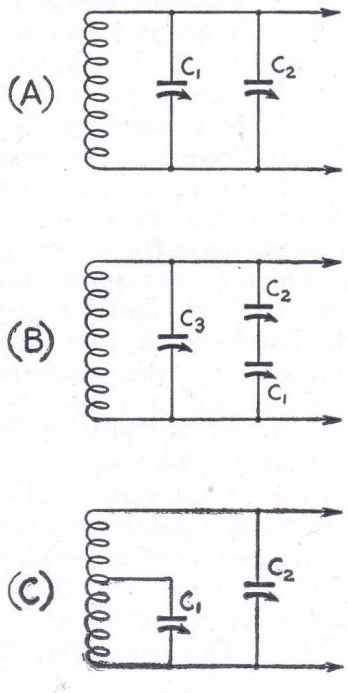

Fig. 712 — Essentials of band-spread tuning systems.

upon the inductance of the coil and the change in tuning capacity. For ease of tuning it is desirable to adjust the tuning range so that practically the whole dial scale is occupied by the band in use. This is called *band-spreading.* Because of the varying widths of the bands, special tuning methods must be devised to give the correct maximum-minimum capacity ratio on each. Several of these are shown in Fig. 712.

In A, a small *band-spread condenser* C_1 (15 to 25 $\mu\mu$fd. maximum capacity) is used in parallel with a condenser, C_2, which is usually large enough (140 to 175 $\mu\mu$fd.) to cover a 2-to-1 frequency range. The setting of C_2 will determine the minimum capacity of the circuit, and the maximum capacity for band-spread tuning will be the maximum capacity of C_1 plus the setting of C_2. The inductance of the coil can be adjusted so that the maximum-minimum ratio will give adequate band-spread. In practicable circuits it is almost impossible because of the non-harmonic relation of the various bands to get full band-spread on all bands with the same pair of condensers, especially when the coils are wound to give continuous frequency coverage on C_2, which is variously called the *band-setting* or *main-tuning* condenser. C_2 must be re-set each time the band is changed.

The method shown at *B* makes use of condensers in series. The tuning condenser, C_1, may have a maximum capacity of 100 $\mu\mu$fd. or more. The minimum capacity is determined principally by the setting of C_3, which usually has low capacity, and the maximum capacity by the setting of C_2, which is of the order of 25 to 50 $\mu\mu$fd. This method is capable of close adjustment to practically any desired degree of band-spread. C_2 and C_3 must be adjusted for each band or else separate pre-adjusted condensers must be switched in.

The circuit at *C* also gives complete spread on each band. C_1, the band-spread condenser, may have any convenient value of capacity; 50 $\mu\mu$fd. is satisfactory. C_2 may be used for continuous frequency coverage ("general coverage") and as a band-setting condenser. The effective maximum-minimum capacity ratio depends upon the capacity of C_2 and the point at which C_1 is tapped on the coil. The nearer the tap to the bottom of the coil, the greater the band-spread, and vice versa. For a given coil and tap, the band-spread will be greater if C_2 is set at larger capacity. C_2 may be mounted in the plug-in coil form and pre-set, if desired. This requires a separate condenser for each band, but eliminates the necessity for re-setting C_2 each time the band is changed.

Ganged tuning — The tuning condensers of the several r.f. circuits may be coupled together mechanically and operated by a single control. This operating convenience involves more complicated construction, both electrically and mechanically. It becomes necessary to make the various circuits *track* — that is, tune to the same frequency at each setting of the tuning control.

True tracking can be obtained only when the inductance, tuning condensers, circuit minimum capacity and maximum capacity are identical in all "ganged" stages. A small *trimmer* or *padding* condenser is connected across the coil so that variations in minimum capacity can be compensated. The fundamental circuit is shown in Fig. 713, where C_1 is the trimmer and C_2 the tuning condenser. The use of the trimmer increases the minimum circuit capacity, but is a necessity for satisfactory tracking. Condensers having maximum capacities of 15 to 30 $\mu\mu$fd. generally are used for the purpose.

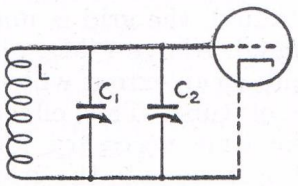

Fig. 713 — Showing the use of a trimmer condenser across the tuned circuit to set the minimum circuit capacity for ganged tuning.

The same methods are applied to band-spread circuits which must be tracked. The circuits are identical with those of Fig. 712, although if both general-coverage and band-spread tuning are to be available, an additional trimmer condenser must be connected across the coil in each circuit shown. If only amateur-band tuning is desired, however, then C_3 in Fig. 712-B, and C_2 in Fig. 712-C serve as trimmers.

The coil inductance can be adjusted by starting with a larger number of turns than necessary, then removing a turn or fraction of a turn at a time until the circuits track satisfactorily. An alternative method of adjusting inductance, providing it is reasonably close to the correct value initially, is to make the coil so that the last turn is variable with respect to the whole coil, or to use a single short-circuited turn the position of which can be varied with respect to the coil. These methods are shown in Fig. 714.

U.H.F. circuits — Tube interelectrode capacities are practically constant for a given tube type regardless of the operating frequency, and the same thing is approximately true of stray circuit capacities. Hence at ultra-high frequencies these capacities become an increasingly larger part of the usable tuning capacity and reasonably-high L/C ratios (§ 2-10) are more difficult to secure as the frequency is raised. Because of this irreducible minimum capacity, standard types of tubes cannot be tuned to frequencies higher than about 200 Mc., even when the inductance in

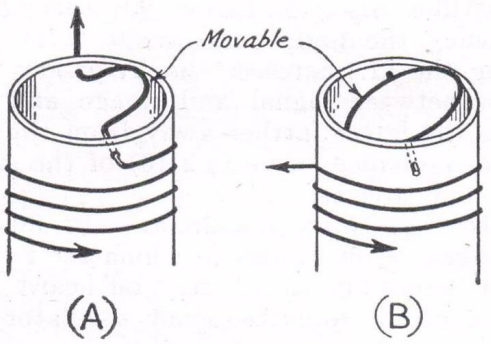

Fig. 714 — Methods of adjusting inductance for ganging. The half turn in A can be moved so that its magnetic field either aids or opposes the field of the coil. The shorted loop in B is not connected to the coil, but operates by induction. It will have no effect on the coil inductance when the plane of the loop is parallel to the axis of the coil, and will give maximum reduction of the coil inductance when perpendicular to the coil axis.

the circuit is simply that of a straight wire between the tube elements.

Along with these capacity effects the input loading (§ 7-6) increases rapidly at ultra-high frequencies so that ordinary tuned circuits have very low effective Q's when connected to the grid circuit of a tube. The effect is still further aggravated by the fact that losses in the tuned circuit itself are higher, causing a still further reduction in Q. For these reasons the frequency limit at which an r.f. amplifier will give any gain is in the vicinity of 60 Mc.,

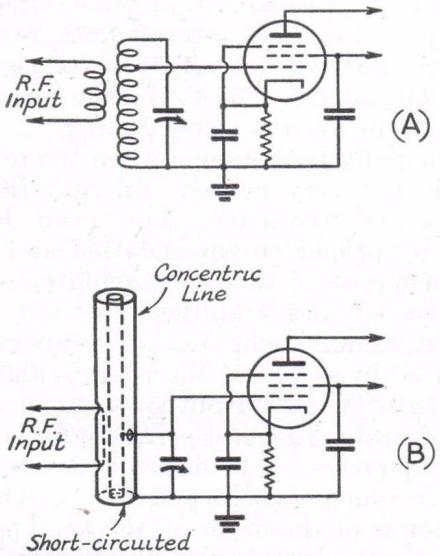

Fig. 715 — Circuits of improved Q for ultra-high frequencies. A, reducing tube loading by tapping down on the resonant circuit; B, use of a concentric-line circuit, with the tube similarly tapped down. The line should be a quarter-wave long, electrically; because of the additional shunt capacity represented by the tube the physical length will be somewhat less than given by the formula (§ 10-5). In general, this reduction in length will be greater the higher the grid tap on the inner conductor. One method of coupling to an antenna or preceding stage is indicated. The coupling turn should be parallel to the axis of the line and insulated from the outer conductor.

with standard tubes, and at higher frequencies there is a loss instead of amplification. The condition can be mitigated somewhat by taking steps to improve the effective Q of the circuit, either by tapping the grid down on the coil as shown in Fig. 715-A or by using a lower L/C ratio (§ 2-10). The Q of the tuned circuit alone can be greatly improved by using a linear circuit (§ 2-12), which when properly constructed will give Q's much higher than those attainable at lower frequencies with conventional coils and condensers. The concentric type of line, Fig. 715-B, is best both from the standpoint of Q and adaptability to non-symmetrical circuits such as are used in receivers. Since the capacity and resistance loading effect of the tube are still present, the Q of such a circuit will be destroyed if the grid-cathode circuit of the tube is connected directly across it, hence tapping down, as shown, is necessary.

Ultra-high frequency amplifiers should employ tubes of the acorn type which have the smallest loading effect as well as low interelectrode capacities. This is because the smaller loading effect means higher input resistance and hence, for a given loaded Q of the tuned circuit, higher voltage developed between grid and cathode. Thus the amplification of the stage is higher.

A concentric circuit may be tuned by varying the length of the inner conductor (usually by using close-fitting tubes, one sliding inside the other) or by connecting an ordinary tuning condenser across the line. Tapping the condenser down as shown in Fig. 715–B gives a band-spread effect which is advantageous, and in addition helps to keep the Q of the circuit higher than it would be with the condenser connected directly across the open end of the line, since at ultra-high frequencies most condensers have losses which cannot be neglected.

U.h.f. oscillators such as those used in the superregenerative detector usually will work well at frequencies where r.f. amplification is impossible with standard tubes (as in the 112-Mc. band) since tube losses are compensated for by energy taken from the power supply. Ordinary coil and condenser circuits are practicable with such tubes and circuits at 112 Mc., and although not as good as linear circuits are more convenient to construct.

• 7-8 THE SUPERHETERODYNE

Principles — In the *superheterodyne*, or *superhet*, receiver the frequency of the incoming signal is changed to a new radio frequency, the *intermediate frequency* (*i.f.*), then amplified, and finally detected. The frequency is changed by means of the heterodyne process (§ 7-1), the output of an adjustable *local oscil-*

lator (*h.f. oscillator*) being combined with the incoming signal in a *mixer* or *converter* stage (*first detector*) to produce a beat frequency equal to the i.f. Fig. 716 gives the essentials of the superhet in block form. C.w. signals are made audible by heterodyning the signal at the second detector by an oscillator (the *beat frequency oscillator* (*b.f.o.*) or *beat oscillator*), set to differ from the i.f. by a suitable audio frequency.

As a numerical example, assume that an intermediate frequency of 455 kc. is chosen, and that the incoming signal is on 7000 kc. Then the h.f. oscillator frequency may be set to 7455 kc. in order that the beat frequency (7455 minus 7000) will be 455 kc. The h.f. oscillator also could be set to 6545 kc., which will give the same frequency difference. To produce an audible c.w. signal of say 1000 cycles at the second detector, the beat oscillator would be set either to 454 kc. or 456 kc.

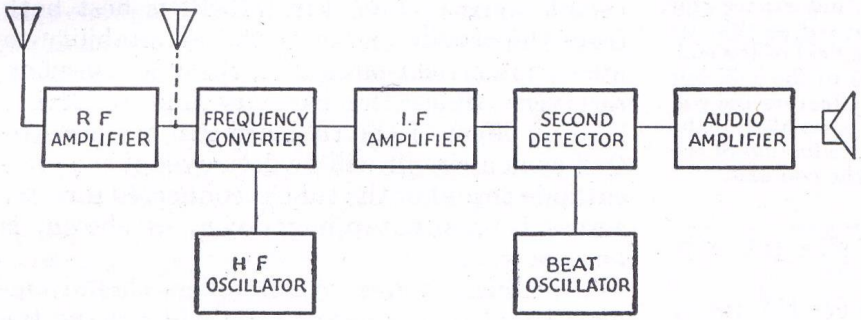

Fig. 716 — **The basic superheterodyne arrangement.**

Characteristics — The frequency-conversion process permits r.f. amplification at a relatively-low frequency where high selectivity can be obtained, and this selectivity is constant regardless of the signal frequency. Higher gain is also possible at the low frequencies used for intermediate amplification. The separate oscillators can be designed for stability, and since the h.f. oscillator is working at a frequency considerably removed from the signal frequency its stability is practically unaffected by the strength of the incoming signal.

Images — Each h.f. oscillator frequency will cause i.f. response at two signal frequencies, one higher and one lower than the oscillator frequency. If the oscillator is set to 7455 kc. to respond to a 7000-kc. signal, for example, it will also respond to a signal on 7910 kc., which likewise gives a 455-kc. beat. The undesired signal of the two is called the *image*. When the r.f. circuit is tuned to the desired signal frequency, and desired-signal and image voltages of equal magnitude are alternately applied to the circuit, the ratio of desired-signal to image i.f. output is called the *signal-to-image* ratio, or *image ratio*.

The image ratio depends upon the selectivity of the r.f. tuned circuits preceding the mixer tube. Also, the higher the intermediate frequency the higher the image ratio, since raising the i.f. increases the frequency separation between signal and image and thus places the latter farther away from the peak of the resonance curve (§ 2-10) of the signal-frequency circuits.

Other spurious responses — In addition to images, other signals to which the receiver is not ostensibly tuned may be heard. Harmonics of the high-frequency oscillator may beat with signals far removed from the desired frequency to produce output at the intermediate frequency; such spurious responses can be reduced by adequate selectivity before the mixer stage and good shielding to prevent signal pickup by any means other than the antenna. When a strong signal is received, the harmonics (§ 2-7) generated by rectification in the second detector may, by stray coupling, be introduced into the r.f. or mixer circuit and be converted to the intermediate frequency to go through the receiver in the same way as an ordinary signal. These "birdies" appear as a heterodyne beat on the desired signal and are principally bothersome when the incoming signal is not very greatly different from the intermediate frequency. They can be prevented by proper circuit isolation and shielding. Harmonics of the beat oscillator also can be converted and amplified through the receiver in similar fashion; these responses can be reduced by shielding the beat oscillator and operating it at low output level.

The double superhet — At high and ultra-high frequencies it is difficult to secure an adequate image ratio when the intermediate frequency is of the order of 455 kc. To reduce image response the signal frequently is first converted to a rather high intermediate frequency (1500, 5000, or even 10,000 kc.), and then — sometimes after further amplification — reconverted to a lower i.f. where higher adjacent-channel selectivity can be obtained. Such a receiver is called a *double superheterodyne*.

• 7-9 FREQUENCY CONVERTERS

Characteristics — The first detector or mixer resembles an ordinary detector. A cir-

cuit tuned to the intermediate frequency is placed in the plate circuit of the mixer so that the highest possible i.f. voltage will be developed. The signal- and oscillator-frequency voltages appearing in the plate circuit are bypassed to ground since they are not wanted in the output. The i.f. tuned circuit should have low impedance for these frequencies, a condition easily met if they do not approach the intermediate-frequency.

The *conversion efficiency* of the mixer is measured by the ratio of i.f. output voltage from the plate circuit to r.f. signal voltage applied to the grid. High conversion efficiency is obviously desirable. The mixer tube noise also should be low if a good signal-to-noise ratio is wanted, particularly if the mixer is the first tube in the receiver.

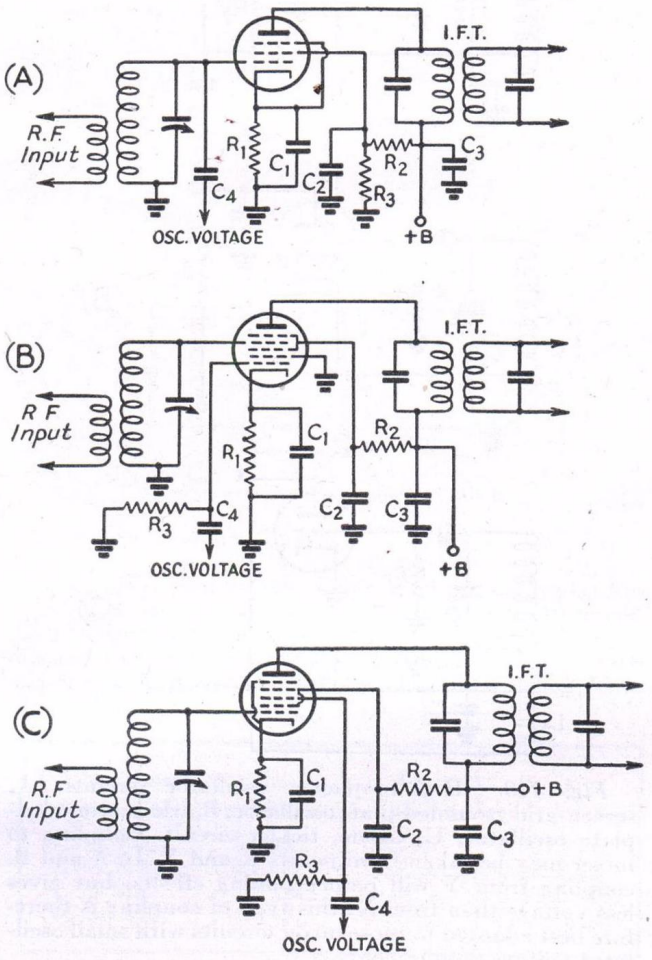

Fig. 717 — Mixer or converter circuits. A, grid injection with a pentode plate detector; B and C, separate injection circuits for converter tubes.

Circuit values are as follows:

	Circuit A	*Circuit B*	*Circuit C*
C_1, C_2, C_3 —	0.01–0.1 μfd.	0.01–0.1 μfd.	0.01–0.1 μfd.
C_4 —	approx. 1 μμfd.	50–100 μμfd.	50–100 μμfd.
R_1 —	10,000 ohms.	300 ohms.	500 ohms.
R_2 —	0.1 megohm.	50,000 ohms.	15,000 ohms.
R_3 —	50,000 ohms.	50,000 ohms.	50,000 ohms.

Plate voltage should be 250 in all three circuits. If an 1851 or 1852 is used in Circuit A, R_1 should be changed to 500 ohms.

The mixer should not require too much r.f. power from the h.f. oscillator, since it may be difficult to supply the power and maintain good oscillator stability (§ 3-7). Also, the conversion efficiency should not depend too critically on the oscillator voltage (that is, a small change in oscillator output should not change the gain appreciably) since it is difficult to maintain constant oscillator output over a wide frequency range.

A change in oscillator frequency caused by tuning of the mixer grid circuit is called *pulling*. If the mixer and oscillator could be completely isolated, mixer tuning would have no effect on the oscillator frequency, but in practice this is a difficult condition to attain. Pulling causes oscillator instability and should be minimized, because the stability of the whole receiver depends critically upon the stability of the h.f. oscillator. The pulling effect decreases with the separation between the signal and h.f. oscillator frequencies, hence is less with high intermediate frequencies and greater with low i.f.'s.

Circuits — Typical frequency-conversion circuits are given in Fig. 717. The variations are chiefly in the way in which the oscillator voltage is introduced. In 717-A, the screen-grid pentode functions as a plate detector; the oscillator is capacity-coupled to the grid of the tube, in parallel with the tuned input circuit. Inductive coupling may be used instead. The conversion gain and input selectivity are generally good so long as the sum of the two voltages (signal and oscillator) impressed on the mixer grid does not exceed the grid bias. It is desirable to make the oscillator voltage as high as possible without exceeding this limitation. The oscillator voltage required is small and the power negligible.

A pentagrid-converter tube is used in the circuit at B. Although intended for combination oscillator-mixer use, this type of tube usually will give more satisfactory performance when used in conjunction with a separate oscillator, the output of which is coupled in as shown. The circuit gives good conversion efficiency, and because of the electron coupling gives desirable isolation between the mixer and oscillator circuits. A small amount of power is required from the oscillator.

Circuit C is for the 6L7 mixer tube. The value of oscillator voltage can vary over a considerable range without affecting the conversion gain. There are no critical adjustments and the oscillator-mixer isolation is good. The oscillator must supply somewhat more power than in B.

A more stable receiver generally results, particularly at the higher frequencies, when separate tubes are used for the mixer and oscillator. The same number of circuit com-

ponents is required whether or not a combination tube is used, so that there is little difference from the cost standpoint.

Tubes for frequency conversion — Any sharp cut-off pentode may be used in the circuit of Fig. 717-A. The 1851 or 1852 give very high conversion gain and an excellent signal-to-noise ratio — comparable, in fact, to the gain and signal-to-noise ratio obtainable with r.f. amplifiers, and in these respects far superior to any other tubes used as mixers. However, this type of tube loads the circuit more (§ 7-6) and thus decreases the selectivity.

The 6K8 is a good tube for the circuit at B; its oscillator plate connection may be ignored. The 6SA7 also is excellent in this circuit, although it has no anode grid (No. 2 grid in the diagram). In addition to these two types, any pentagrid converter tube may be used.

• 7-10 THE HIGH-FREQUENCY OSCILLATOR

Design considerations — Stability of the receiver (§ 7-2) is chiefly dependent upon the stability of the h.f. oscillator, and particular care should be given this part of the receiver. The frequency of oscillation should be insensitive to changes in voltage, loading, and mechanical shock. Thermal effects (slow change in frequency because of tube or circuit heating) should be minimized. These ends can be attained by the use of good insulating materials and good-quality circuit components, by suitable electrical design, and by careful mechanical construction.

In addition, the oscillator must be capable of furnishing sufficient r.f. voltage and power to the particular mixer circuit chosen, at all frequencies within the range of the receiver, and its harmonic output should be as low as possible to reduce spurious response (§ 7-8).

It is desirable to make the L/C ratio in the oscillator tuned circuit as low as possible (high-C) since this results in increased stability (§ 3-7). Particular care should be taken to insure that no part of the oscillator circuit will vibrate mechanically. This calls for short leads and very "solid" mechanical construction. The chassis and panel material should be heavy and rigid enough so that pressure on the tuning dial will not cause torsion and a shift in the frequency. Care in mechanical construction is well repaid by increased frequency stability.

Circuits — Several oscillator circuits are shown in Fig. 718. The point at which output voltage is taken for the mixer is indicated by the "X" or "Y" in each case. A and B will give about the same results, and require only one coil. However, in these two circuits the cathode is above ground potential for r.f., which often is a cause of hum modulation of the oscillator output at 14 Mc. and higher frequencies when 6.3-volt heater tubes are used. Hum is usually not bothersome with 2.5-volt tubes, nor, of course, with tubes which are heated by direct current. The circuit of 718-C overcomes hum with 6.3-volt tubes since the cathode is grounded. The two coils are advantageous in construction since the feedback adjustment (number of turns on L_2) is simple mechanically.

Besides the use of a fairly high C/L ratio in the tuned circuit, it is necessary to adjust the

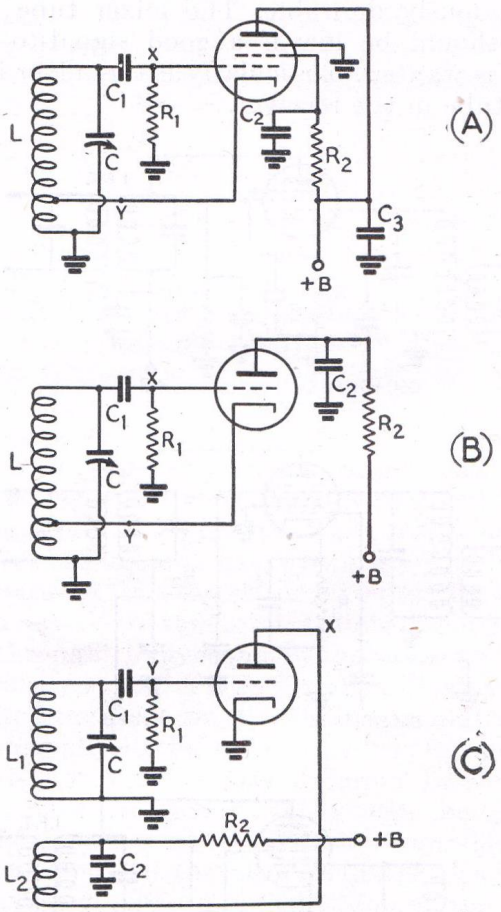

Fig. 718 — High-frequency oscillator circuits. A, screen-grid grounded-plate oscillator; B, triode grounded-plate oscillator; C, triode, tickler circuit. Coupling to mixer may be taken from points X and Y. In A and B, coupling from Y will reduce pulling effects, but gives less voltage than from X; this type of coupling is therefore best adapted to those mixer circuits with small oscillator-voltage requirements.

Typical values are as follows:

	Circuit A	*Circuit B*	*Circuit C*
C_1 —	100 μμfd.	100 μμfd.	100 μμfd.
C_2 —	0.1 μfd.	0.1 μfd.	0.1 μfd.
C_3 —	0.1 μfd.		
R_1 —	50,000 ohms.	50,000 ohms.	50,000 ohms.
R_2 —	50,000 ohms.	10,000 to 25,000 ohms.	10,000 to 25,000 ohms.

The "B" supply voltage should be 250 volts. In circuits B and C, R_2 is for the purpose of dropping the supply voltage to 100–150 volts; it may be omitted if this voltage is taken from a voltage divider in the power supply (§ 8–10).

feedback to obtain optimum results. Too much feedback will cause the oscillator to "squeg," or operate at several frequencies simultaneously (§ 7-4); too little feedback will cause the output to be low. In the tapped-coil circuits (A, B) the feedback is increased by moving the tap toward the grid end of the coil; in *C*, by increasing the number of turns on L_2 or by moving L_2 closer to L_1.

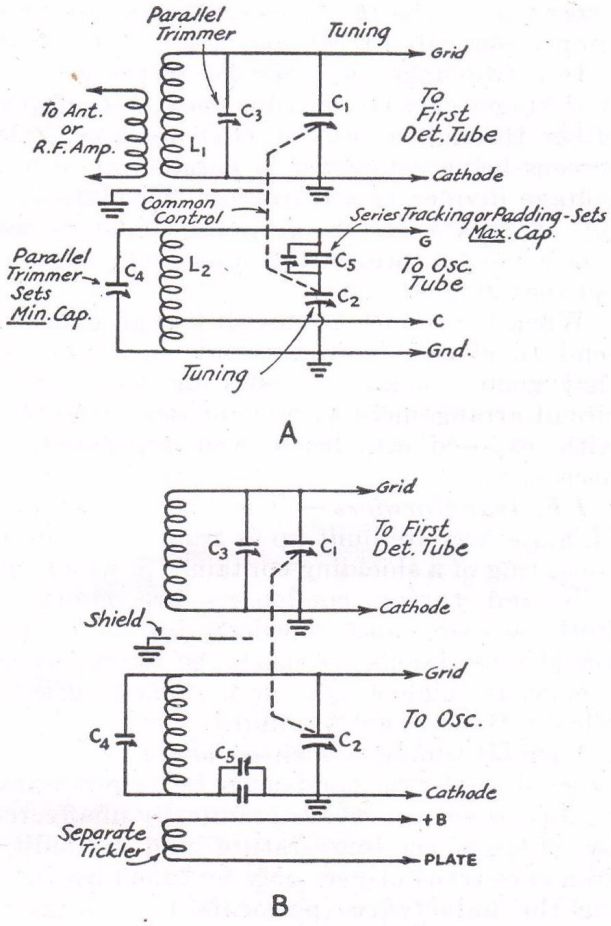

Fig. 719 — Converter circuit tracking methods. Approximate circuit values for 450- to 465-kc. intermediates with tuning ranges of approximately 2.15-to-1, C_1 and C_2 having a maximum of 140 $\mu\mu$fd. and the total minimum capacitance, including C_3 or C_4, being 30 to 35 $\mu\mu$fd.

Tuning Range	L_1	L_2	C_5
1.7–4 Mc.	50 μh.	40 μh.	0.0013 μfd.
3.7–7.5 Mc.	14 μh.	12.2 μh.	0.0022 μfd.
7–15 Mc.	3.5 μh.	3 μh.	0.0045 μfd.
14–30 Mc.	0.8 μh.	0.78 μh.	None used

Approximate values for 450- to 465-kc. i.f. with a 2.5-to-1 tuning range, C_1 and C_2 being 350-$\mu\mu$fd. maximum, minimum capacitance including C_3 and C_4 being 40 to 50 $\mu\mu$fd.

Tuning Range	L_1	L_3	C_5
0.5–1.5 Mc.	240 μh.	130 μh.	425 $\mu\mu$fd.
1.5–4 Mc.	32 μh.	25 μh.	0.00115 μfd.
4–10 Mc.	4.5 μh.	4 μh.	0.0028 μfd.
10–25 Mc.	0.8 μh.	0.75 μh.	None used

To avoid changes in plate voltage which may cause the oscillator frequency to change, it is good practice to regulate the plate supply by means of a gaseous voltage regulator tube (§ 8-8).

Tracking — For ganged tuning there must be a *constant difference* in frequency between the oscillator and mixer circuits. This difference is equal to the intermediate frequency (§ 7-8).

Tracking methods for covering a wide frequency range, suitable for general-coverage receivers, are shown in Fig. 719. The tracking capacity C_5 commonly consists of two condensers in parallel, a fixed one of somewhat less capacity than the value needed and a smaller variable in parallel to allow for adjustment to the exact proper value. In practice, the trimmer C_4 is first set for the high-frequency end of the tuning range and then the tracking condenser is set for the low-frequency end. The tracking capacity becomes larger as the percentage difference between the oscillator and signal frequencies becomes smaller (that is, as the signal frequency becomes higher). Typical circuit values are given in the accompanying table.

In amateur-band receivers tracking is simplified by choosing a band-spread circuit which gives practically straight-line-frequency tuning (equal frequency change for each dial division) and then adjusting the oscillator and mixer tuned circuits so that both cover the same total number of kilocycles. For example, if the i.f. is 455 kc. and the mixer circuit tunes from 7000 to 7300 kc. between two given points on the dial, then the oscillator must tune from 7455 to 7755 kc. between the same two dial readings. With the band-spread arrangement of Fig. 712-C the tuning will be practically straight-line frequency if the capacity actually in use at C_2 is not too small; the same is true of 712-A if C_1 is small compared to C_2.

• 7-11 THE INTERMEDIATE FREQUENCY AMPLIFIER

Choice of frequency — The selection of an intermediate frequency is a compromise between various conflicting factors. The lower the i.f., the higher the selectivity and gain, but a low i.f. brings the image nearer the desired

signal and hence decreases the image ratio (§ 7-8). A low i.f. also increases pulling of the oscillator frequency (§ 7-9). On the other hand, a high i.f. is beneficial to both image ratio and pulling, but the selectivity and gain are lowered. The difference in gain is least important.

An i.f. of the order of 455 kc. gives good selectivity and is satisfactory from the standpoint of image ratio and oscillator pulling at frequencies up to 7 Mc. The image ratio is poor at 14 Mc. when the mixer is connected to the antenna, but adequate when there is a tuned r.f. amplifier between antenna and mixer. At 28 Mc. and the ultra-high frequencies the image ratio is very poor unless several r.f. stages are used. Above 14 Mc. pulling is likely to be bad unless very loose coupling can be used between mixer and oscillator.

With an i.f. of about 1600 kc., satisfactory image ratios can be secured on 14, 28 and 56 Mc., and pulling can be reduced to negligible proportions. However, the i.f. selectivity is considerably lower, so that more tuned circuits must be used to increase the selectivity. For ultra-high frequencies, including 28 Mc., the best solution is to use a double superhet (§ 7-8), choosing one i.f. for image reduction (5 and 10 Mc. are frequently used) and the second for gain and selectivity.

In choosing an i.f. it is wise to avoid frequencies on which there is considerable activity by the various radio services, since such signals may be picked up directly on the i.f. wiring. The frequencies mentioned are fairly free of such interference.

Circuits — I.f. ampifiers usually consist of one or two stages. Two stages at 455 kc. will give all the gain usable, in view of the minimum receiver noise level, and also give suitable selectivity for good-quality 'phone reception (§ 7-2).

A typical circuit arrangement is shown in Fig. 720. A second stage would simply duplicate the circuit of the first. In principle, the i.f. amplifier is the same as the tuned r.f. amplifier (§ 7-6). However, since a fixed frequency is used the primary as well as the secondary of the coupling transformer is tuned, giving higher selectivity than is obtainable with a closely-coupled untuned primary. The cathode resistor, R_1, is connected to a gain control circuit of the type previously described (§ 7-6); usually both stages, if two are used, are controlled by a single variable resistor. The decoupling resistor, R_3 (§ 2-11), helps isolate the amplifier and thus prevent stray feedback. C_2 and R_4 are part of the automatic volume control circuit (§ 7-13); if no a.v.c. is used the lower end of the i.f. transformer secondary is simply connected to ground.

In a two-stage amplifier the screen grids of both stages may be fed from a common supply, either through a resistor (R_2) as shown, the screens being connected in parallel, or from a voltage divider (§ 8-10) across the plate supply. Separate screen dropping resistors are preferable for preventing undesired coupling between stages.

When two stages are used the high gain will tend to cause instability and oscillation, so that good shielding, by-passing and careful circuit arrangement to prevent stray coupling, with exposed r.f. leads well separated, is necessary.

I.F. transformers — The tuned circuits of i.f. amplifiers are built up as transformer units consisting of a shielding container in which the coils and tuning condensers are mounted. Both air-core and powdered-iron-core universal-wound coils are used, the latter having somewhat higher Q's and, hence, greater selectivity and gain per unit.

Variable tuning condensers are of the midget type, air-dielectric condensers being preferable because their capacity is practically unaffected by changes in temperature and humidity. Iron-core transformers may be tuned by varying the inductance (permeability tuning) in which case stability comparable to that of variable air-condenser tuning can be obtained by use of high-stability fixed mica condensers. Such stability is of great importance, since a circuit whose frequency "drifts" with time will eventually be tuned to a different frequency than the other circuits and thereby reduce the gain and selectivity of the amplifier.

Besides the type of i.f. transformer shown in Fig. 720, special units to give desired selectivity characteristics are available. For higher than ordinary adjacent channel selectivity (§ 7-2) *triple-tuned* transformers, with a third tuned circuit inserted between the input and output

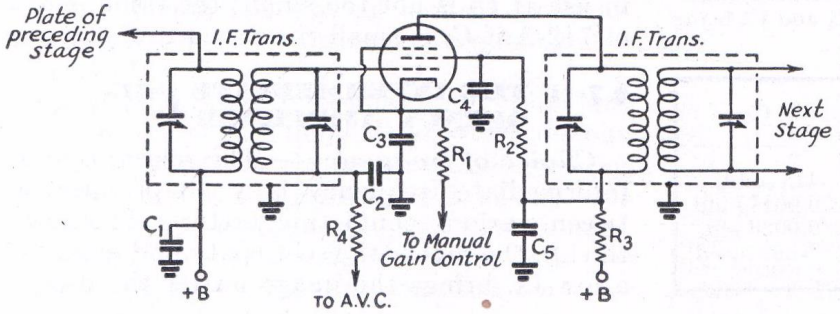

Fig. 720 — Intermediate-frequency amplifier circuit. Typical values are as follows:
C_1 — 0.1 μfd. at 455 kc.; 0.01 μfd. at 1600 kc. and higher.
C_2 — 0.01 μfd.
C_3, C_4, C_5 — 0.1 μfd. at 455 kc.; 0.01 μfd. at 1600 kc. and higher.
R_1 — 300 ohms.
R_2 — 0.1 megohm.
R_3 — 2000 ohms.
R_4 — 0.25 megohm.

windings, are used. The energy is transferred from the input to the output windings via this *tertiary* winding, thus adding its selectivity to the overall selectivity of the transformer. *Variable-selectivity* transformers also can be obtained, these usually being provided with a third (untuned) winding which can be connected to a resistor, thereby loading the tuned circuits and decreasing the Q and selectivity (§ 2:-10) to broaden the selectivity curve. The variation in selectivity is brought about by switching the resistor in and out of the circuit. Another method is to vary the coupling between primary and secondary, overcoupling being used to broaden the selectivity curve, undercoupling to sharpen it (§ 2-11).

Selectivity — The overall selectivity of the i.f. amplifier will depend on the frequency and the number of stages. The following figures are indicative of the band-widths to be expected with good-quality transformers, with construction in which regeneration is kept to a minimum:

	Band Width, kc.		
Intermediate Frequency	*2 times down*	*10 times down*	*100 times down*
One stage 455 kc. (air core)	8.7	17.8	32.3
One stage 455 kc. (iron core)	4.3	10.3	20.4
Two stage 455 kc. (iron core)	2.9	6.4	10.8
Two stage 1600 kc.	11.0	16.6	27.4
Two stage 5000 kc.	25.8	46.0	100.0

Tubes for I.F. amplifiers — Variable-μ pentodes (§ 3-5) are almost invariably used in i.f. amplifier stages, since grid-bias gain control (§ 7-6) is practically always applied to the i.f. amplifier. Tubes with high plate resistance will have least effect on the selectivity of the amplifier, and those with high mutual conductance will give greatest gain. The choice of i.f. tubes will have practically no effect on the signal-to-noise ratio, since this will have been determined by the preceding mixer and r.f. amplifier (if used).

If single-ended tubes are used, care should be taken to keep the plate and grid leads well separated. With these tubes it is advisable to mount the screen by-pass condenser directly on the bottom of the socket crosswise between the plate and grid pins to provide additional shielding, making sure that the outside foil of the condenser is connected to ground.

Single-signal effect — In heterodyne c.w. reception with a superhet receiver the beat oscillator is set to give a suitable audio-frequency beat note when the incoming signal is converted to the intermediate frequency. For example, the beat oscillator may be set to 456 kc. (the i.f. being 455 kc.) to give a 1000-cycle beat note. Now if an interfering signal appears at 457 kc., it also will be heterodyned by the beat oscillator to produce a 1000-cycle beat. This *audio-frequency image* corresponds to the high-frequency images already discussed (§ 7-8) and can be reduced by providing enough selectivity since the image signal is off the peak of the i.f. resonance curve.

When this is done, tuning through a given signal will show a strong response at the desired beat tone on one side of zero beat only, instead of the two beat notes on either side of zero beat which are characteristic of less selective reception, hence the name "single signal" reception.

The necessary selectivity is difficult to obtain with non-regenerative amplifiers employing ordinary tuned circuits unless a very low intermediate frequency or a large number of circuits is used. In practice it is secured either by regenerative amplification or by the use of a crystal filter.

Regeneration — Regeneration can be used to give a pronounced single-signal effect, particularly when the i.f. is 455 kc. or lower. The resonance curve of an i.f. stage at critical regeneration (just below the oscillating point) is extremely sharp, a band width of 1 kc. at 10 times down and 5 kc. at 100 times down being readily obtainable in one stage. The audio-frequency image of a given signal can thus be reduced by a factor of nearly 100 for a 1000-cycle beat note (image 2000 cycles from resonance).

Regeneration is easily introduced in an i.f. amplifier by providing a small amount of capacity coupling between grid and plate (bringing a short length of wire, connected to the grid, into the vicinity of the plate lead, usually will suffice) and may be controlled by the regular cathode-resistor gain control. When the i.f. is regenerative, it is usually preferable to operate the tube at reduced gain (high bias) and depend upon the regeneration to bring the signal strength back to normal. This prevents overloading on strong signals and thereby increases the effective selectivity.

The higher selectivity with regeneration reduces the response to noise generated in the earlier stages of the receiver, just as in the case of high selectivity produced by other means, and therefore improves the signal-to-noise ratio. The disadvantage is that the regenerative gain varies with the signal strength, being less on strong signals, and the selectivity varies accordingly.

Crystal filters — The most satisfactory method of obtaining high selectivity is by the use of a piezo-electric quartz crystal as a selective filter in the i.f. amplifier (§ 2-10). Compared to a good tuned circuit, the Q of such a crystal is extremely high. The dimensions of the crystal are made such that it is resonant at the desired intermediate frequency, and it is then used as a selective coupler between i.f. stages.

Fig. 721 gives a typical crystal-filter reso-

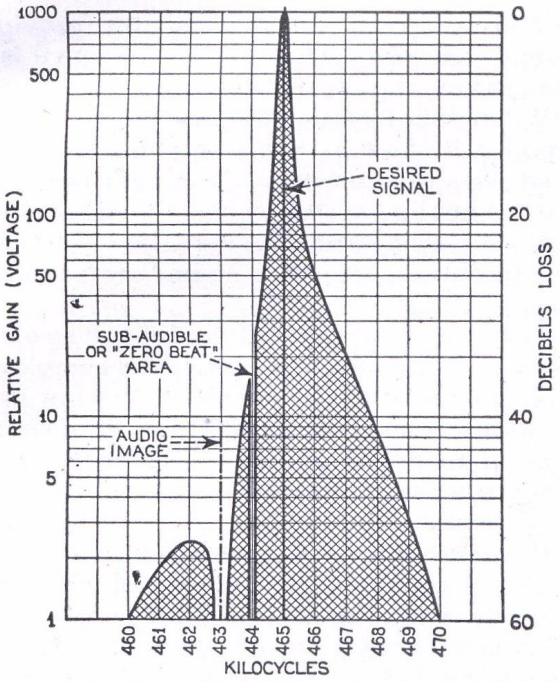

Fig. 721 — Graphical representation of single-signal selectivity. The shaded area indicates the region in which response is obtainable.

nance curve. For single-signal reception the audio-frequency image can be reduced by a factor of 1000 or more. Besides practically eliminating the a.f. image, the high selectivity of the crystal filter provides great discrimination against signals very close to the desired signal in frequency, and, by reducing the band width, reduces the response of the receiver to noise both from sources external to the receiver and in the r.f. stages of the receiver itself.

Crystal-filter circuits; phasing — Several crystal-filter circuits are shown in Fig. 722. Those at A and B are practically identical in performance, although differing in details. The crystal is connected in a bridge circuit (§ 2-11) with the secondary side of T_1, the input transformer, balanced to ground either through a pair of condensers, *C*-*C*, (A) or by a center-tap on the secondary, L_2 (B). The bridge is completed by the crystal *X*, and the *phasing condenser*, C_2, which has a maximum capacity somewhat higher than the capacity of the crystal in its holder. When C_2 is set to balance the crystal-holder capacity the resonance curve of the crystal circuit is practically symmetrical; the crystal acts as a series-resonant circuit of very high *Q* and thus allows signals of the desired frequency to be fed through C_3 to L_3L_4, the output transformer. Without C_2 the holder capacity (with the crystal acting as a dielectric) would by-pass signals of undesired frequencies to the output circuit.

The phasing control has an additional function besides neutralization of the crystal-holder capacity. The holder capacity becomes a part of the crystal circuit and causes it to act as a parallel-tuned resonant circuit at a frequency slightly higher than its series-resonant frequency. Signals at the parallel-resonant frequency are thus prevented from reaching the output circuit. The phasing control, by varying the effect of the holder capacity, permits shifting the parallel-resonant frequency over a considerable range, thus providing adjustable rejection of interfering signals. The effect of rejection is illustrated in Fig. 721, where the audio image is reduced far below the value that would be expected if the resonance curve were symmetrical.

Variable selectivity — In circuits such as A and B, Fig. 722, variable selectivity is obtained by adjustment of the variable input impedance, which is effectively in series with the crystal resonator. This is accomplished by

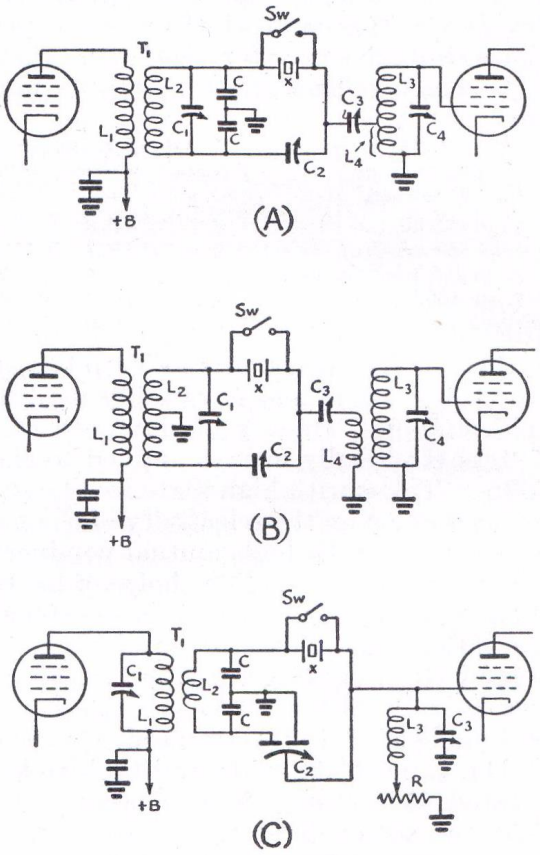

Fig. 722 — Crystal filter circuits of three types. All give variable band-width, with C having the greatest range of selectivity. Their operation is discussed in the text. Suitable circuit values are as follows: Circuit A, T_1, special i.f. input transformer with high-inductance primary, L_1, closely coupled to tuned secondary, L_2; C_1, 50-$\mu\mu$fd. variable; C, each 100-$\mu\mu$fd. fixed (mica); C_2, 10- to 15-$\mu\mu$fd. (max.) variable; C_3, 50-$\mu\mu$fd. trimmer; L_3C_4, i.f. tuned circuit, with L_3 tapped to match crystal-circuit impedance. In Circuit B, T_1 is the same as in Circuit A except that the secondary is center-tapped; C_1 is 100-$\mu\mu$fd. variable; C_2, C_3 and C_4 same as for Circuit A; L_3L_4 is a transformer with primary, L_4, corresponding to tap on L_3 in A. In Circuit C, T_1 is a special i.f. input transformer with tuned primary and low-impedance secondary; C, each 100-$\mu\mu$fd. fixed (mica); C_2, opposed-stator phasing condenser, app. 8 $\mu\mu$fd. maximum capacity each side; L_3C_3, high-Q i.f. tuned circuit; R, 0 to 3000 ohms (selectivity control).

varying C_1 (the *selectivity control*) which tunes the balanced secondary circuit of T_1. When the secondary is tuned to i.f. resonance, the parallel impedance of the L_2C_1 combination is maximum and is purely resistive (§ 2-10). Since the secondary circuit is center-tapped, approximately one-fourth of this resistive impedance is in series with the crystal through C_3 and L_4. This lowers the Q of the crystal circuit and makes its selectivity minimum. At the same time, the voltage applied to the crystal circuit is maximum.

When the input circuit is detuned from the crystal resonant frequency, the resistance component of the input impedance decreases, and so does the total parallel impedance. Accordingly, the selectivity of the crystal circuit becomes higher and the applied voltage falls off. At first the resistance decreases faster than the applied voltage, with the result that at first the c.w. output from the filter *increases* as the selectivity is increased. The output then falls off gradually as the input circuit is detuned farther from resonance and the selectivity becomes still higher.

In the circuits of A and B, Fig. 722, the minimum selectivity is still much greater than that of a normal two-stage 455-kc. amplifier, and it is desirable to provide a wider range of selectivity, particularly for 'phone reception. A circuit which does this is shown at Fig. 722-C. The principle of operation is similar, but a much higher value of resistance can be introduced in the crystal circuit to reduce the selectivity. The output tuned circuit L_3C_3 must have high Q. A compensated condenser is used at C_2 (phasing) to maintain circuit balance, so that the phasing control does not affect the resonant frequency. The output circuit functions as a voltage divider in such a way that the amplitude of the carrier delivered to the next grid does not vary appreciably with the selectivity setting. The variable resistor, R, may consist of a series of separate fixed resistors selected by a tap switch.

• 7-12 THE SECOND DETECTOR AND BEAT OSCILLATOR

Detector circuits — The second detector of a superhet receiver performs the same function as the detector in the simple receiver, but usually operates at a higher input level because of the relatively great r.f. amplification. Therefore the ability to handle large signals without distortion is preferable to high sensitivity. Plate detection is used to some extent, but the diode detector is most popular. It is especially adapted to furnishing automatic gain or volume control (§ 7-13), which gives it an additional advantage. The basic circuits are as described in § 7-3, although in many cases the diode elements are incorporated in a multi-purpose tube which also has an amplifier section.

The beat oscillator — Any standard oscillator circuit (§ 3-7) may be used for the beat oscillator. Special beat-oscillator transformers are available, usually consisting of a tapped coil with adjustable tuning; these are most conveniently used with circuits such as those shown at Fig. 718-A and -B, with the output taken from "Y." A variable condenser of about 25 $\mu\mu$fd. capacity often is connected between cathode and ground to provide fine adjustment of the beat frequency. The beat oscillator usually is coupled to the second detector tuned circuit through a fixed condenser of a few $\mu\mu$fd. capacity.

The beat oscillator should be well shielded to prevent coupling to any part of the circuit except the second detector, and to prevent its harmonics from getting into the front end of the receiver and being amplified like regular signals. To this end, the plate voltage should be as low as is consistent with sufficient audio output. If the beat-oscillator output is too low, strong signals will not give a proportionately strong audio response.

A regenerative second detector may be used to give the audio beat note, but since the detector must be detuned from the i.f. the selectivity and signal strength are reduced, while blocking (§ 7-4) is pronounced because of the high signal level at the second detector.

• 7-13 AUTOMATIC VOLUME CONTROL

Principles — Automatic regulation of the gain of the receiver in inverse proportion to the signal strength is a great advantage, especially in 'phone reception, since it tends to keep the output level of the receiver constant regardless of input signal strength. It is readily accomplished in the superheterodyne by using the average rectified d.c. voltage developed by the received signal across a resistance in a detector circuit (§ 7-3) to vary the bias on the r.f. and i.f. amplifier tubes. Since this voltage is proportional to the average amplitude of the signal, the gain is reduced as the signal strength is greater. The control will be more complete as the number of stages to which the a.v.c. bias is applied is greater. Control of at least two stages is advisable.

Circuits — A typical circuit of a diode-triode type tube used as a combined a.v.c. rectifier, detector and first audio amplifier is shown in Fig. 723. One plate of the diode section of the tube is used for signal detection and the other for a.v.c. rectification. The a.v.c. diode plate is fed from the detector diode through the small coupling condenser, C_3. Negative bias resulting from the flow of rectified carrier current is developed across R_4, the diode

Fig. 723 — Second-detector and first audio circuit with a.v.c., using duo-diode-triode tube.
R_1 — 0.25 megohm.
R_2 — 50,000 to 250,000 ohms.
R_3 — 2000 ohms.
R_4 — 2 to 5 megohms.
R_5 — 0.5 to 1 megohm.
R_6, R_7, R_8 — 0.25 megohm.
R_9 — 0.25 megohm.
R_{10} — 0.5-megohm volume control.
C_1, C_2, C_3 — 100 $\mu\mu$fd.
C_4 — 0.1 μfd.
C_5, C_6, C_7 — 0.01 μfd.
C_8, C_9 — 0.01 to 0.1 μfd.
C_{10} — 5- to 10-μfd. electrolytic.
C_{11} — 250 $\mu\mu$fd.

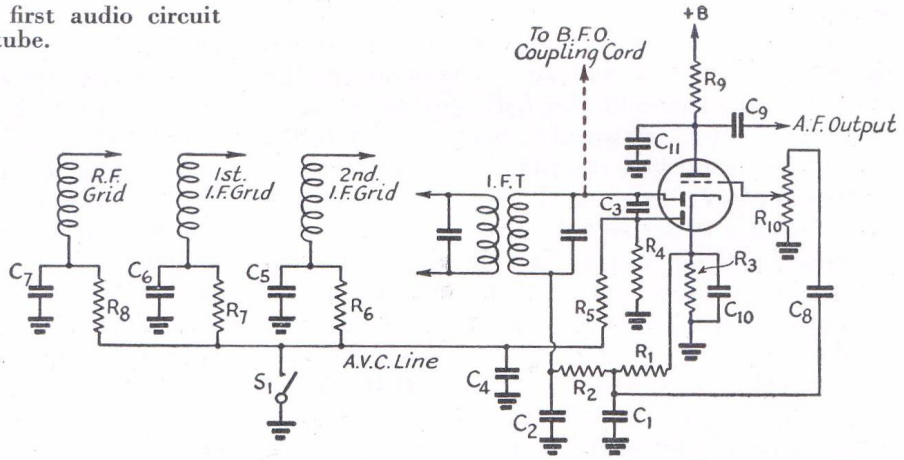

load resistor. This negative bias is applied to the grids of the controlled stages through the filtering resistors (§ 2-11) R_5, R_6, R_7 and R_8.

It does not matter which of the two diode plates is selected for audio and which for a.v.c. Frequently the two plates are connected together and used as a combined detector-a.v.c. rectifier. This could be done in Fig. 723. The a.v.c. filter and line would connect to the junction of R_2 and C_2, while C_3 and R_4 would be omitted from the circuit.

When S_1 is closed the a.v.c. line is grounded, thereby removing the a.v.c bias from the amplifier stages.

Delayed a.v.c. — In Fig. 723 the audio diode return is made directly to the cathode and the a.v.c. diode return to ground. This places negative bias on the a.v.c. diode equal to the d.c. drop through the cathode resistor (a volt or two) and thus delays the application of a.v.c. voltage to the amplifier grids, since no rectification takes place in the a.v.c. diode circuit until the carrier amplitude is large enough to overcome the bias. Without this delay, the a.v.c. would start working even with a very small signal. This is undesirable because the full amplification of the receiver then cannot be realized on weak signals. In the audio diode circuit this fixed bias would cause distortion and must be avoided, hence the return is made directly to the cathode.

Time constant — The time constant (§ 2-6) of the resistor-condenser combinations in the a.v.c. circuit is an important part of the system. It must be high enough so that the modulation on the signal is completely filtered from the d.c. output, leaving only an average d.c. component which follows the relatively slow carrier variations with fading; audio-frequency variations in the a.v.c. voltage applied to the amplifier grids would reduce the percentage of modulation on the incoming signal and in the practical case would cause frequency distortion. On the other hand, the time constant should not be too great since the a.v.c. then would be unable to follow rapid fading. The values indicated are satisfactory for high-frequency reception.

Signal strength and tuning indicators — A useful accessory to the receiver is an indicator which will show relative signal strength. Not only is it an aid in giving reports, but it also is helpful in aligning the receiver circuits, in conjunction with a test oscillator or other steady signal.

Three types of indicators are shown in Fig. 724. That at A uses an electron-ray tube, several types of which are available. The grid of the triode section is usually connected to the a.v.c. line. The particular type of tube to use will depend upon the voltage available for its grid; where the a.v.c. voltage is relatively large, a remote-cutoff type tube such as the 6G5 or 6N5 should be used in preference to the sharp-cutoff type (6E5).

In B, a milliammeter is connected in series with the d.c. plate lead to one or more r.f. and i.f. tubes whose grids are controlled by a.v.c. Since the plate current of such tubes varies with the strength of the incoming signal, the meter will indicate relative signal intensity and may be calibrated in "S" points. The scale range of the meter should be chosen to fit the number of tubes in use; the maximum plate current of the average remote-cutoff r.f. pentode is from 7 to 10 milliamperes. The shunt resistor R enables setting the plate current to the full-scale value ("zero adjustment"). With this system the ordinary meter reads downwards from full scale with increasing signal strength, which is the reverse of normal pointer movement (clockwise with increasing reading). Special instruments with the zero-current position of the pointer at the right-hand side of the scale are used in commercial receivers.

The system at C uses a 0–1 milliammeter in a bridge circuit arranged so that the meter reading and signal strength increase together. The current through the branch containing R_1 should be approximately equal to the current

through that containing R_2. In some manufactured receivers this is brought about by draining the screen voltage-divider current and the current to the screens of three r.f. pentodes (r.f.

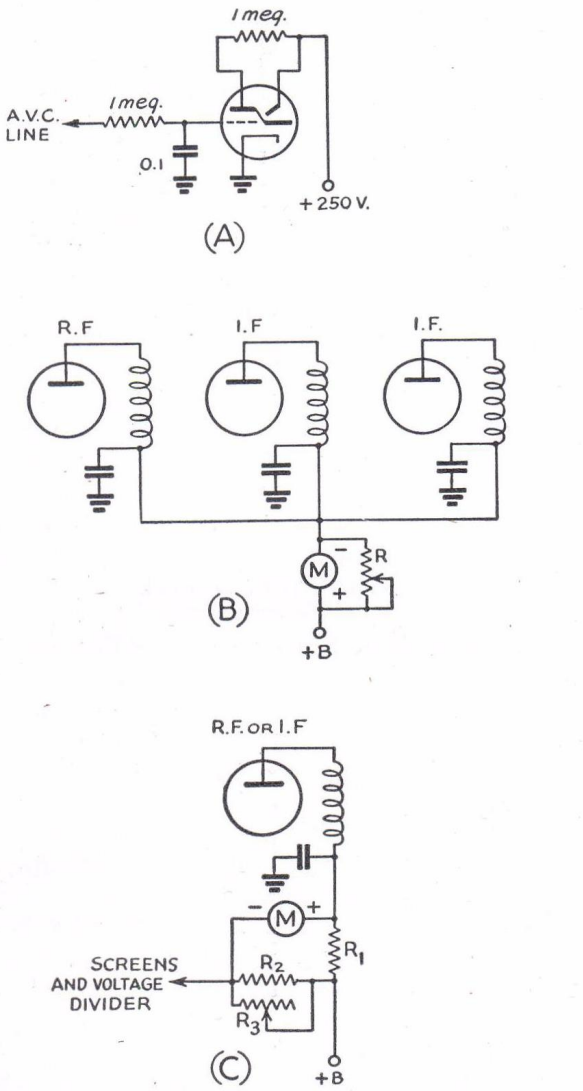

Fig. 724 — **Tuning indicator or "S"-meter circuits for superhet receivers. A, electron-ray indicator; B, plate-current meter for tubes on a.v.c.; C, bridge circuit for a.v.c. controlled tube. In B, resistor R should have a maximum resistance several times that of the milliammeter. In C, representative values are: R_1, 250 ohms; R_2, 350 ohms; R_3, 1000-ohm variable.**

and i.f. stages) through R_2, the sum of these currents being about equal to the maximum plate current of one a.v.c. controlled tube. Typical values for this type of circuit are given. The sensitivity can be increased by making R_1, R_2 and R_3 larger. The initial setting is made with the manual gain control set near maximum, when R_3 should be adjusted to make the meter reading zero with no signal.

• 7-14 PRESELECTION

Purpose — Preselection is added signal-frequency selectivity before the mixer stage is reached. An r.f. amplifier preceding the mixer is generally called a *preselector*, its purpose, in part at least, being to discriminate in favor of the signal against the image. The preselector may consist of one or more r.f. amplifier stages. When its tuning is ganged with that of the mixer and oscillator, its circuits must track with the mixer circuit.

The circuit is the same as discussed earlier (§ 7-6). An external preselector stage may be used with receivers having inadequate image ratios, in which case it is built as a separate unit, often with a tuned output circuit which gives a further improvement in selectivity. The output circuit usually is link-coupled (§ 2-11) to the receiver.

Signal/noise ratio — An r.f. amplifier will have a better signal-to-noise ratio (§7-2) than a mixer because the gain is higher and because the mixer electrode arrangement results in higher internal tube noise than does the ordinary pentode structure. Hence a preselector is advantageous in increasing the signal-to-noise ratio over that obtainable when the mixer is fed directly from the antenna.

Image suppression — The image ratios (§ 7-8) obtainable at frequencies up to and including 7 Mc. with a single preselector stage are high enough, when the intermediate frequency is 455 kc., so that for all practical purposes there is no appreciable image response. Average image ratios on 14 Mc. and 28 Mc. are 50–75 and 10–15, respectively. This is the overall selectivity of the r.f. and mixer tuned circuits. A second preselector stage, adding one more tuned circuit, will increase the ratios to several hundred at 14 Mc. and to 30 or 40 at 28 Mc.

On ultra-high frequencies it is impracticable to attempt to secure a good image ratio with a 455-kc. i.f. Good performance in this respect can be secured only by using a high-frequency i.f. or by using a double superhet (§ 7-8) with a high-frequency first i.f.

Regeneration — Regeneration may be used in a preselector stage to increase both gain and selectivity. Since this makes tuning more critical and increases ganging problems, regeneration is seldom used except at 14 Mc. and above where adequate image suppression is difficult to obtain with non-regenerative circuits. The same disadvantages exist as in the case of a regenerative i.f. amplifier (§ 7-11). The effect of regeneration is roughly equivalent to the addition of another non-regenerative preselector stage.

The regeneration may be introduced by the same method used in regenerative i.f. amplifiers (§ 7-11). The manual gain control of the stage will serve as a volume control.

Regeneration does not improve the signal-to-noise ratio, since the tube noise is fed back to the grid circuit along with the signal to add

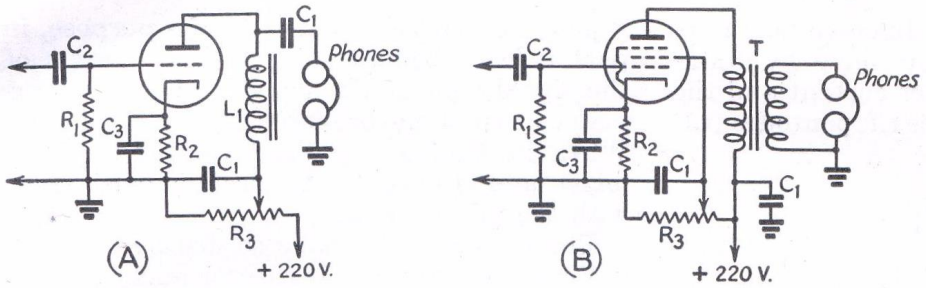

Fig. 725 — Audio output limiting circuits.

C_1 — 0.25 μfd.
C_2 — 0.01 μfd.
C_3 — 5 μfd.
R_1 — 0.5 megohm.
R_2 — 2000 ohms.
R_3 — 50,000-ohm potentiometer.
T — Output transformer.
L_1 — 15-henry choke

to the thermal agitation noise originally present. The latter noise also is amplified.

• 7-15 NOISE REDUCTION

Types of noise — In addition to tube and circuit noise (§ 7-6) much of the noise interference experienced in reception of amateur signals is caused by domestic electrical equipment and automobile ignition systems. The interference is of two types in its effects. The first is of the "hiss" type consisting of overlapping pulses, similar in nature to the receiver noise. It is largely reduced by high selectivity in the receiver, especially for code reception. The second is the "pistol shot" or "machine gun" type, consisting of separated impulses of high amplitude. The "hiss" type of interference is usually caused by commutator sparking in d.c. and series a.c. motors, while the "shot" type results from separated spark discharges (a.c. power leaks, switch and key clicks, ignition sparks, and the like).

Impulse noise — Impulse noise, because of the extremely short duration of the pulses as compared to the time between them, must have high pulse amplitude to give much average energy. Hence noise of this type strong enough to cause much interference generally has an instantaneous amplitude much higher than that of the signal being received. The general principle of devices intended to reduce such noise is that of allowing the signal amplitude to pass through the receiver unaffected, but making the receiver inoperative for amplitudes greater than that of the signal. The greater the amplitude of the pulse compared to its time of duration the more successful the noise-reducing device, since more of the energy in the pulse can be suppressed.

In passing through selective receiver circuits the time duration of the impulses is increased because of the Q or flywheel effect (§ 2-10) of the circuits. Hence the greater the selectivity ahead of the noise-reducing device the more difficult it becomes to secure good noise suppression.

Audio limiting — A considerable degree of noise reduction in code reception can be accomplished by amplitude limiting arrangements applied to the audio output circuit of a receiver. Such limiters also maintain the signal output nearly constant with fading. Diagrams of typical output limiter circuits are shown in Fig. 725. Circuit A employs a triode tube operated at reduced plate voltage (approximately 10 volts) so that it saturates at a low signal level. The arrangement of B has better limiting characteristics. A pentode audio tube is operated at reduced screen voltage (35 volts or so) so that the output power remains practically constant over a grid excitation voltage range of more than 100 to 1. These output limiter systems are simple and adaptable to nearly all receivers. However, they cannot prevent noise peaks from overloading previous circuits.

Second detector circuits — The circuit of Fig. 726 "chops" noise peaks at the second detector of a superhet receiver by means of a biased diode which becomes non-conducting above a predetermined signal level. The audio output of the detector must pass through the diode to the grid of the amplifier tube. The diode would normally be non-conducting with the connections shown were it not for the fact that it is given positive bias from a 30-volt source through the adjustable potentiometer R_3. Resistors R_1 and R_2 must be fairly large in value to prevent loss of audio signal.

The audio signal from the detector can be considered to modulate (§ 5-1) the steady diode current, and conduction will take place so long as the diode plate is positive with respect to the cathode. When the signal is sufficiently large to swing the cathode positive with respect to the plate, however, conduction ceases and that portion of the signal is cut off from the audio amplifier. The point at which cut-off occurs can be selected by adjustment of R_3. By setting R_3 so that the signal just passes through the "valve," noise pulses higher in amplitude than the signal will be cut off. The circuit of Fig. 726-A, using an infinite-impedance detector (§ 7-3) gives a positive voltage on rectification. When the rectified voltage is negative, as from the usual diode detector (§ 7-3) a different circuit arrangement, shown in Fig. 726-B, is required.

An audio signal of about ten volts is required for good limiting action. When a beat oscillator is used for c.w. reception the b.f.o. voltage should be small so that incoming noise will not

have a strong carrier to beat against and produce large audio output.

A second-detector noise limiting circuit which automatically adjusts itself to the received carrier level is shown in Fig. 727. The diode load circuit (§ 7-3) consists of R_6, R_7, R_8 (shunted by the high-resistance audio volume control, R_4) and R_5 in series. The cathode of the 6N7 noise-limiter is tapped on the load resistor at a point such that the average rectified carrier voltage (negative) at its grid is approximately twice the negative voltage at the cathode, both measured with reference to ground. A filter network, R_1C_1, is inserted in the grid circuit so that the audio modulation on the carrier does not reach the grid, hence the grid potential is maintained at substantially the rectified carrier voltage alone. The cathode, however, is free to follow the modulation, and when the modulation is 100% the peak cathode voltage will just equal the steady grid voltage.

At all modulation percentages below 100% the grid is negative with respect to cathode and current cannot flow in the 6N7 plate-cathode circuit. A noise pulse exceeding the peak voltage which represents 100% modulation will, however, make the grid positive with respect to cathode and the relatively-low plate-cathode resistance of the 6N7 shunts the high-resistance audio output circuit, effectively short-circuiting it so that there is practically no response for the duration of the noise peak over the 100% modulation limit.

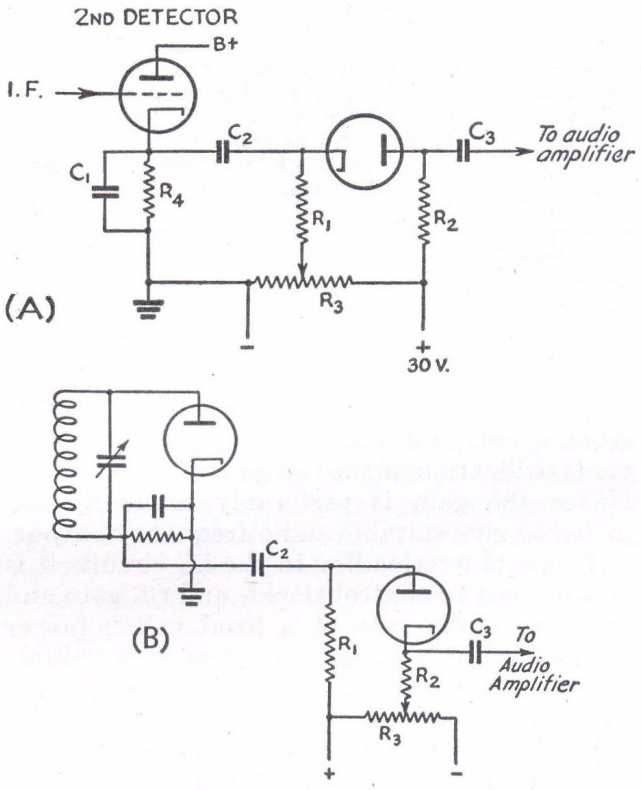

Fig. 726 — The series-valve noise-limiter circuit. A, with an infinite-impedance detector; B, with diode detector. Values are as follows:
R_1 — 0.25 megohm.
R_2 — 50,000 ohms.
R_3 — 10,000-ohm potentiometer.
R_4 — 20,000 to 50,000 ohms.
C_1 — 250 $\mu\mu$fd.
C_2, C_3 — 0.1 μfd.
Diode circuit constants in B are conventional.

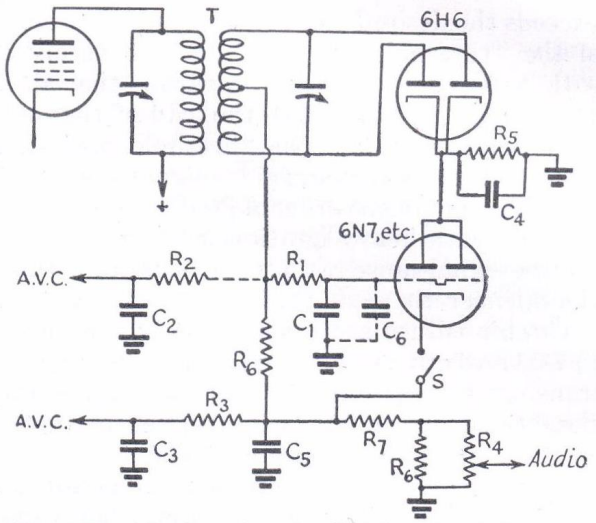

Fig. 727 — Automatic noise limiting circuit for superhet receivers.
T — I.f. transformer with balanced secondary for working into diode rectifier.
R_1, R_2, R_3 — 1 megohm.
R_4 — 1-megohm volume control.
R_5 — 250,000 ohms.
R_6, R_8 — 100,000 ohms.
R_7 — 25,000 ohms.
C_1 — 0.1-μfd. paper.
C_2, C_3 — 0.05-μfd. paper.
C_4, C_5 — 50-$\mu\mu$fd. mica.
C_6 — 0.001-μfd. mica (for r.f. filtering, if needed).
Sw — S.p.s.t. toggle (on-off switch).
The switch should be mounted close to the circuit elements and controlled by an extension shaft if necessary.

R_5 is used to make the noise-limiting tube more sensitive, by applying to the plate an audio voltage out of phase with the cathode voltage so that at the instant the grid goes positive with respect to cathode, the highest positive potential also is applied to the plate, thus further lowering the effective plate-cathode resistance.

I.F. noise silencer — In the circuit shown in Fig. 728 noise pulses are made to decrease the gain of an i.f. stage momentarily and thus silence the receiver for the duration of the pulse. Noise voltage in excess of the desired signal's maximum i.f. voltage is taken off at the grid of the i.f. amplifier, amplified by the noise amplifier stage and rectified by the full-wave diode noise rectifier. The noise circuits are tuned to the i.f. The rectified noise voltage is applied as a pulse of negative bias to the No. 3 grid of the 6L7 used as an i.f. amplifier, wholly or partially disabling this stage for the duration of the individual noise pulse, depending on the amplitude of the noise voltage. The noise amplifier-rectifier circuit is biased so that rectification will not start until noise voltage

exceeds the desired-signal amplitude, by means of the "threshold control," R_2. For reception with automatic volume control, the a.v.c. voltage can be applied to the grid of the noise amplifier to augment this threshold bias. This system of noise silencing gives signal-noise ratio improvement of the order of 30 db. (power ratio of 1000) with heavy ignition interference, raising the signal-noise ratio from −10 db. without the silencer to +20 db. in a typical instance.

Circuit values are normal for i.f. amplifiers (§ 7-11) except as indicated. The noise rectifier transformer T_1 has an untuned secondary closely-coupled to the primary, center-tapped for full-wave rectification. The center-tap rectifier (§ 8-3) is used to reduce the possibility of r.f. feedback into the i.f. amplifier (noise silencer) stage. The time constant (§ 2-6) of the noise rectifier load circuit, $R_1C_1C_2$, must be small to prevent disabling the noise silencer stage for a longer period than the duration of the noise pulse. The radio-frequency choke, *RFC*, must be effective at the intermediate frequency.

Adequate shielding and isolation of the noise amplifier and rectifier circuits from the noise silencer stage must be provided to prevent possible self-oscillation and instability. This circuit is preferably applied to the first i.f. stage of the receiver before the high-selectivity circuits are reached, and is most effective when the signal and noise levels are fairly high (one or two r.f. stages before the mixer) since several volts must be obtained from the noise rectifier for good silencing.

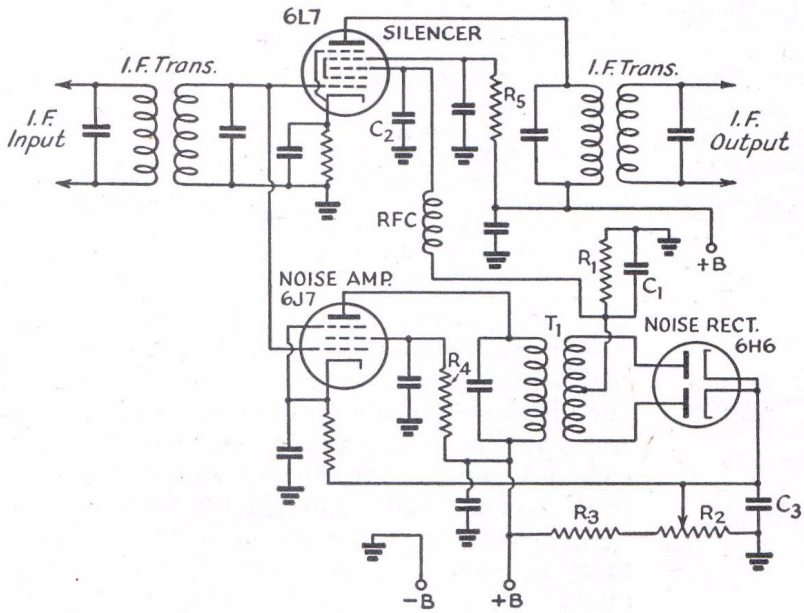

Fig. 728 — I.f. noise-silencing circuit. The "B" supply should be 250 volts.
C_1 — 50–250 μμfd.; use smallest value possible without r.f. feedback.
C_2 — 50 μμfd.
C_3 — 0.1 μfd.
R_1 — 0.1 megohm.
R_2 — 5000-ohm volume control.
R_3 — 20,000 ohms.
R_4, R_5 — 0.1 megohm.
T_1 — Special i.f. transformer for noise rectifier.

• 7-16 OPERATING SUPERHET RECEIVERS

C.w. reception — Proper adjustment of the beat oscillator is to a frequency slightly different from the intermediate frequency (§ 7-8). This adjustment may be made by tuning in a moderately-weak steady carrier, with the beat oscillator turned off, for maximum signal strength as determined by maximum hiss, then turning on the beat oscillator and adjusting its frequency (leaving the receiver tuning alone) to give a suitable beat note. Subsequently the beat oscillator need not be touched except for occasional checking to make certain the frequency has not drifted from the initial setting. The b.f.o. may be set on either the high- or low-frequency side of zero beat.

The use of a.v.c. (§ 7-13) is not generally satisfactory in c.w. reception because the receiver gain rises in the spaces between dots and dashes, giving an increase in noise in the same intervals, and also because the rectified beat oscillator voltage in the second detector circuit also works the a.v.c. circuit. This gives a constant reduction in gain and prevents utilization of the full gain of the receiver. Hence the gain is preferably manually adjusted to give suitable audio-frequency output.

To avoid overloading in the i.f. circuits it is usually best to control the i.f. and r.f. gain and keep the audio gain at a fixed value, rather than to use the a.f. gain control as a volume control and permit the r.f. gain to stay fixed at its highest level.

Tuning with the crystal filter — If the receiver is equipped with a crystal filter the tuning instructions in the preceding paragraph still apply, but more care must be used both in initial adjustment of the beat oscillator and in tuning. The beat oscillator is set as described above, but with the crystal filter in operation and adjusted to its sharpest position, if variable selectivity is available. This initial adjustment should be made with the phasing control

(§ 7-11) in the intermediate position, and after it is completed the beat oscillator should be left set and the receiver tuned to the other side of zero beat (audio-frequency image) on the same carrier to give a beat note of the same tone. This beat will be considerably weaker than the first, and may be "phased out" almost completely by careful adjustment of the phasing control. This is the adjustment for normal operation, and it will be found that one side of zero beat has practically disappeared, leaving the receiver with maximum response on the desired side.

An interfering signal having a beat note differing from that of the a.f. image can similarly be phased out, provided its carrier frequency is not too near the desired carrier.

Depending upon the filter design, maximum selectivity may cause the dots and dashes to lengthen out so that they seem to "run together." This, plus the fact that the tuning is quite critical with extremely high selectivity, may make it desirable to use somewhat less selectivity in regular operating. However, it must be emphasized that to realize the benefits of the crystal filter in reducing interference it is necessary to do *all* tuning with it in the circuit. The selectivity is so high that it is almost impossible to find the desired station quickly should the filter be switched in only when interference is present.

'Phone reception — In reception of 'phone signals the normal procedure is to set the r.f. and i.f. gain at maximum, switch the a.v.c. on, and use the audio gain control for setting the volume. This insures maximum effectiveness of the a.v.c. system in compensating for fading or maintaining constant audio output when either strong or weak signals are tuned in. On occasions a strong signal close to the frequency of a weaker desired station may take control of the a.v.c., in which case the weaker station will practically disappear because of the reduced gain. In such a situation better reception may result if the a.v.c. is switched off, using the manual r.f. gain control to set the gain at a point which prevents "blocking" by the stronger signal.

A crystal filter will do much toward reducing interference in 'phone bands. Although the high selectivity cuts sidebands and thereby reduces the audio output, especially at the higher audio frequencies, it is possible to use quite high selectivity without destroying intelligibility even though the "quality" of the transmission suffers. As in the case of c.w. reception, it is advisable to do all tuning with the filter in circuit when interference is likely to occur. Variable-selectivity filters permit a choice of selectivity which give varying degrees of sideband cutting to suit conditions.

An undesired carrier close in frequency to a desired carrier will heterodyne with it to produce a beat note equal to the frequency difference. Such a heterodyne can be reduced by adjustment of the phasing control when the crystal filter is used. It cannot be prevented in the "straight" superhet having no crystal filter.

A tone control often will be of help in reducing the effects of high-pitched heterodynes, sideband splatter (§ 5-2) and noise, by cutting off the higher audio frequencies. This, like sideband cutting with high selectivity, causes some reduction in naturalness.

Spurious responses — Spurious responses can be recognized without a great deal of difficulty. It is often possible to identify an image by the type of station transmitting, knowing the frequency assignments applying to the frequency to which the receiver is tuned. However, an image also can be recognized by its behavior with tuning. If the signal causes a heterodyne beat note with the desired signal and is actually on the same frequency, the beat note will not change as the receiver is tuned through the signal, but if the interfering signal is an image the beat will vary in pitch as the receiver is tuned. The beat oscillator in the receiver must be off for this test. Using a crystal filter with the beat oscillator on, the image will peak on the opposite side of zero beat to that on which the desired signal peaks.

Harmonic response can be recognized by the "tuning rate," or movement of the tuning dial required to give a specified change in beat note. Signals getting into the i.f. via high-frequency oscillator harmonics will tune more rapidly (less dial movement) through a given change in beat note than signals received by normal means.

Harmonics of the beat oscillator can be recognized by the tuning rate of the beat oscillator pitch control. A smaller movement of the control will suffice for a given change in beat note than is necessary with legitimate signals.

● 7-17 SERVICING SUPERHET RECEIVERS

I.f. alignment — A calibrated signal generator or test oscillator is a practical necessity for initial alignment of an i.f. amplifier. Some means for measuring the output of the receiver also is needed. If the receiver has a tuning meter, its indications will serve for this purpose. Alternatively, if the signal generator is of the modulated type an a.c. output meter (high-resistance voltmeter with copper-oxide rectifier) can be connected across the primary of the output transformer feeding the loudspeaker, or from the plate of the last audio amplifier through a 0.1-μfd. blocking condenser (§ 2-13) to the receiver chassis. The intensity of sound from the loud-speaker can also be judged by ear (with the modulated test oscilla-

tor) if no output meter is available, although this method is not as accurate as those using instruments.

The procedure is as follows: The test oscillator is adjusted to the desired intermediate frequency and the "hot" or ungrounded output lead is clipped on the grid lead of the last i.f. amplifier tube. The grounded lead is connected to the receiver chassis. The trimmer condensers of the transformer feeding the second detector are then adjusted for maximum signal output. The hot lead from the generator is next clipped on the grid of the next to the last i.f. tube and the second from last i.f. transformer brought into alignment by adjusting its trimmers for maximum output. This process is continued, working back from the second detector, until all of the i.f. transformers have been aligned. It will be necessary to reduce the output of the signal generator as more of the i.f. amplifier is brought into use because the increased gain is likely to cause overloading and consequent inaccurate readings. It is desirable in all cases to use the minimum signal strength which gives useful output readings. The i.f. transformer in the plate circuit of the mixer is aligned with the signal-generator lead connected to the mixer grid. Since the tuned circuit feeding the mixer grid may, because it is tuned to a considerably higher frequency, effectively short-circuit the signal-generator output, it may be necessary to disconnect this circuit. With tubes having a top grid connection this can be done by removing the grid cap.

If the tuning indicator is used as an output meter the a.v.c. should be switched on; if the audio output method is used the a.v.c. should be off. The beat oscillator should be off in either case.

If the i.f. amplifier has a crystal filter, the filter should first be switched out and the alignment carried out as above, setting the signal generator as closely as possible to the frequency of the crystal. When completed, the crystal should be switched in and the oscillator frequency varied back and forth over a small range either side of the crystal frequency to find the exact frequency, which will be indicated by a sharp rise in output. Leaving the generator set on the crystal peak, the i.f. trimmers may be realigned for maximum output. The necessary readjustment should be small. The oscillator frequency should be checked frequently to make sure it has not drifted from the crystal peak.

A modulated signal is not of much value for aligning a crystal-filter i.f. amplifier, since the high selectivity cuts sidebands and the results may be inaccurate if the audio output of the receiver is used as a criterion of alignment. Lacking the a.v.c. tuning meter, the transformers may be aligned by ear, using a weak unmodulated signal adjusted to the crystal peak. Switch on the beat oscillator, adjust to a suitable tone, and align the transformers for maximum audio output.

An amplifier which is only slightly out of alignment as a result of normal drift from temperature, humidity or aging effects can be realigned by using any steady signal, such as a local broadcasting signal, in lieu of the test oscillator. Allow the receiver to warm up thoroughly (an hour or so), tune in the signal as usual and "touch up" the i.f. trimmers for maximum output.

R.f. alignment — The object of alignment of the r.f. circuits in a gang-tuned receiver is to secure adequate tracking over each tuning range. The adjustment may be carried out with a test oscillator of suitable frequency range or even on noise or such signal as may be heard. Set the tuning dial at the high-frequency end of the range in use and adjust the h.f. oscillator trimmer condenser for maximum hiss. Next adjust the mixer trimmer condenser for maximum hiss or signal, then the r.f. trimmers. Reset the tuning dial to the low-frequency end of the range and repeat; if the circuits are properly designed no change in trimmer settings should be necessary. Should it be necessary to increase the trimmer capacity in any circuit, more inductance is needed; if less capacity resonates the circuit, less inductance is required. In the oscillator circuit, the proper frequency range may be secured by adjustment of the tracking condenser capacity (§ 7-10) as well as by inductance adjustment.

Tracking is seldom perfect throughout a tuning range, so that a check of alignment at intermediate points in the range may show it to be slightly off. Normally the gain variation from this cause will be small, however, and it will suffice to bring the circuits into line at both ends of the range. If most reception is in a particular part of the range, such as an amateur band, the circuits may be aligned at that frequency to insure maximum performance, even though the ends of the whole frequency range may be slightly out of alignment.

Oscillation of r.f. or i.f. amplifiers — Oscillation in high-frequency amplifier and mixer circuits is evidenced by squeals or "birdies" as the tuning is varied. It can be caused by poor connections in the common ground circuits, especially to the tuning condenser rotors. Inadequate or defective by-pass condensers in cathode, plate and screen-grid circuits also can cause such oscillation. In some cases it may be advisable to provide a shield between the stators of pre-r.f. amplifier and first-detector ganged tuning condensers, in addition to the usual tube and inter-stage shielding. A metal tube with an ungrounded shell will cause

this trouble. Improper screen-grid voltage, which might result from a shorted or too-low screen-grid series resistor, also could be responsible.

Oscillation in the i.f. circuits is independent of high-frequency tuning and is indicated by a continuous squeal which appears when the gain is advanced with the c.w. beat oscillator on. It can result from similar defects in i.f. amplifier circuits. Inadequate cathode resistor by-pass capacitance is a common cause of such oscillation. Additional by-pass capacitance, of 0.1 to 0.25 μfd. usually will remedy it. Similar treatment can be applied to screen-grid and plate by-passes of i.f. tubes.

Instability — "Birdies" or a mushy hiss occurring with tuning of the high-frequency oscillator may indicate that the oscillator is "squegging" or oscillating simultaneously at high and low frequencies (§ 7-4). This may be caused by a defective tube, too-high oscillator plate or screen-grid voltage, excessive feed back in the oscillator circuit or too-high grid-leak resistance.

A varying beat note in c.w. reception indicates instability in either the h.f. oscillator or beat oscillator, usually the former. The stability of the beat oscillator can be checked by introducing a signal of intermediate frequency (from a test oscillator) into the i.f. amplifier; if the beat note is unstable, the trouble is in the beat oscillator. Poor connections or defective parts are the likely cause. Instability in the high-frequency oscillator may be the result of poor circuit design (§ 7-10), loose connections, defective tubes or circuit components, or poor voltage regulation in the oscillator plate and/or screen supply circuits. Mixer pulling of the oscillator circuit (§ 7-9) also will cause the beat-note to chirp on strong c.w. signals because the oscillator load changes slightly under these conditions.

In 'phone reception with a.v.c., a peculiar type of instability ("motorboating") may appear if the h.f. oscillator frequency is sensitive to changes in plate voltage. As the a.v.c. voltage rises the electrode currents of the controlled tubes decrease, decreasing the load on the power supply and causing the plate voltage on the oscillator to rise. The oscillator frequency changes correspondingly, detuning the circuit and reducing the a.v.c. voltage, thus tending to restore the original conditions. The process then repeats itself at a rate determined by the signal strength and the time constant of the power supply circuits. It is more pronounced with high selectivity, as when a crystal filter is used, and can be cured by designing the oscillator circuit to be relatively insensitive to plate voltage changes and by regulating the voltage applied to the oscillator (§ 7-10).

• 7-18 RECEPTION OF FREQUENCY-MODULATED SIGNALS

F.m. receivers — A frequency-modulation receiver differs in circuit design from one designed for amplitude modulation chiefly in the arrangement used for detecting the signal. Detectors for amplitude-modulated signals do not respond to frequency modulation. It is also necessary, for full realization of the noise-reducing benefits of the f.m. system, that the signal applied to the detector be completely free from amplitude modulation. In practice this is attained by preventing the signal from rising above a given amplitude by means of a limiter (§ 7-15). Since the weakest signal must be amplitude-limited, high gain must be provided ahead of the limiter; the superheterodyne type of circuit is almost invariably used to provide the necessary gain.

The r.f. and i.f. stages in such a superhet are identical in circuit with those in an a.m. receiver. Since the use of f.m. is confined to the ultra-high frequencies (above 28 Mc.) a high intermediate frequency is employed, usually between 4 and 5 Mc. This not only reduces image response but also gives the greater band-width necessary to accommodate wide-band f.m. signals.

Receiver requirements — The primary requirements are sufficient r.f. and i.f. gain to "saturate" the limiter even with a weak signal, sufficient band-width (§ 7-2) to accommodate the full frequency deviation either side of the carrier frequency without undue attenuation at the edges of the band, a limiter circuit which functions properly on both rapid and slow variations in amplitude, and a detector which gives a linear relationship between frequency deviation and *amplitude* output. The audio circuits are the same as in other receivers (§ 7-5) except that it is desirable to cut off the upper audio range by means of a low-pass filter (§ 2-11) because the higher-frequency noise components have the greatest amplitude in an f.m. receiver.

The limiter — Limiter circuits are generally of the plate saturation type (§ 7-15) where low plate and screen voltage are used to limit the plate current flow at high signal amplitudes. Fig. 729-A is a typical circuit. The tube is self-biased (§ 3-6) by a grid leak, R_1, and condenser, C_1. R_2, R_3 and R_4 form a voltage divider (§ 8-8) which puts the desired voltages on the screen and plate. The lower the voltages the lower the signal level at which limiting occurs, but the r.f. output voltage of the limiter also is lower. C_2 and C_3 are the plate and screen by-pass condensers, of conventional value for the intermediate frequency used. The time constant (§ 2-6) of R_1C_1 determines the behavior of the limiter with respect to rapid and slow amplitude variations. For best operation

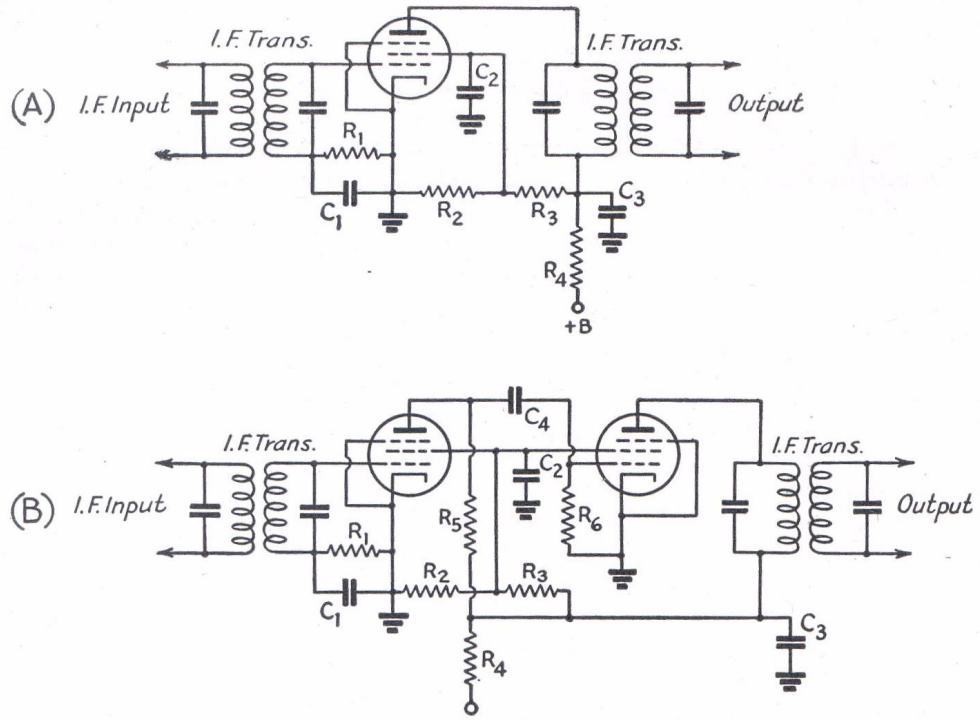

Fig. 729 — F.m. limiter circuits. A, single-tube plate-saturation limiter; B, cascade limiter. Typical values are as follows:

	Circuit A	*Circuit B*
C_1 —	100 $\mu\mu$fd.	100 $\mu\mu$fd.
C_2, C_3 —	0.1 μfd.	0.1 μfd.
C_4 —		250 $\mu\mu$fd.
R_1 —	0.1 megohm.	50,000 ohms.
R_2 —	2000 ohms.	2000 ohms.
R_3 —	50,000 ohms.	50,000 ohms.
R_4 —	0 to 50,000 ohms.	0 to 50,000 ohms.
R_5 —		4000 ohms.
R_6 —		0.2 megohm.

Plate supply voltage should be 250 volts in each circuit.

on impulse noise (§ 7-15) the time constant should be small, but a small time constant limits the range of signal strengths which the limiter can handle without departing from the constant-output condition. A larger time constant is better in the latter respect but is not so effective for rapid variations, hence a compromise set of constants must be used.

The cascade limiter, Fig. 729-B, overcomes this by making the time constant in the first grid circuit suitable for effective operation on impulse noise and that in the second grid (C_4R_6) optimum for a wide range of input signal strengths. This results, in addition, in more constant output over a very wide range of input signal amplitudes because the voltage at the grid of the second stage is already partially amplitude-limited, thus giving the second stage less work to do. Resistance coupling ($R_5C_4R_6$) between stages is used in preference to transformer coupling for simplicity and to prevent unwanted regeneration, additional gain at this point being unnecessary.

The rectified voltage developed across R_1 in either circuit may be used for a.v.c. (§ 7-13).

Discriminator circuits and operation — The f.m. detector is commonly called a *discriminator*, because of its ability to discriminate between frequency deviations above and those below the carrier frequency. The circuit generally used is shown in Fig. 730-A. A special i.f. coupling transformer is used between the limiter and detector. Its secondary, L_1, is centertapped and is connected back to the plate side of the primary circuit, which is otherwise conventional. C_4 is the tuning condenser. The load circuits of the two diode rectifiers (R_1C_1, R_2C_2) are connected in series; the constants used are of the same order as in ordinary diode detector circuits (§ 7-3). The audio output is taken from across the two load resistances.

The primary and secondary circuits are both adjusted to resonance in the center of the i.f. pass-band. The voltage applied to the rectifiers consists of two components, that induced in the secondary by the inductive coupling, and that fed to the center of the secondary through C_2. The phase relations between the two are such that at resonance the rectified load currents are equal in amplitude but flow in opposite directions through R_1 and R_2, hence the net voltage across the terminals marked "audio output" is zero. When the carrier deviates from resonance, the induced secondary current either lags or leads, depending upon whether the deviation is to the high- or low-frequency side, and this phase shift causes the induced current to combine with that fed through C_2 in such a way that one diode gets more voltage than the other when the frequency is below resonance, while the second diode gets the larger voltage when the frequency is higher

than resonance. The voltage appearing across the output terminals is the difference between the two diode voltages, hence a characteristic like that of Fig. 731 results, where the net rectified output voltage has opposite polarity for frequencies on either side of resonance, and up to a certain point becomes greater in amplitude as the frequency deviation is greater. The straight-line portion of the curve is the useful detector characteristic. The separation between the peaks which mark the ends of the linear portion of the curve depends upon the *Q's* of the primary and secondary circuits and the degree of coupling. The separation becomes greater with low *Q's* and close coupling. It is ordinarily set so that the peaks fall just outside the limits of the pass-band, thus utilizing most of the straight portion of the curve. Since the audio output is proportional to the change in d.c. voltage with deviation, it is advantageous from this standpoint to have the peak separation the minimum necessary for a linear characteristic.

A second type of discriminator circuit is shown in Fig. 730-B. Two secondary circuits S_1 and S_2 are used, one tuned above the center frequency of the i.f. pass-band, the other below. They are coupled equally to the primary, which is tuned to the center frequency. As the carrier frequency deviates, the voltages induced in the secondaries will change in amplitude, with the larger voltage appearing across the secondary nearer resonance with the instantaneous frequency. The detection characteristic is similar to that of the first type of discriminator. The peak separation is determined by the *Q's* of the circuits, the coefficient of coupling, and the tuning of the two secondaries. High *Q's* and loose coupling are necessary for close peak separation.

F.m. receiver alignment — Alignment of f.m. receivers up to the limiter is carried out as described in § 7-17. For output measurement, a 0–1 milliammeter or 0–500 microammeter should be connected in series with the limiter grid resistor (R_1 in Fig. 729) at the grounded end; or, if the voltage drop across R_1 is used for a.v.c. and the receiver is provided with a tuning meter (§ 7-13), the tuning meter may be used as an output meter. An accurately calibrated signal generator or test oscillator is desirable, since the i.f. should be aligned to be as symmetrical as possible; that is, the output reading should be the same for any two test oscillator settings the same number of kilocycles above or below resonance. It is not necessary to have uniform response over the whole band to be received, although the output at the edges of the band (limit of deviation (§ 5-11) of the transmitted signals) should not be too low — not less than 25% of the voltage at resonance. In communications work a bandwidth of 30 kc. or less (15 kc. or less deviation) is commonly used.

Output readings should be taken with the test oscillator set at intervals of a few kilocycles either side of resonance until the band limits are reached, and the i.f. trimmers adjusted to give as symmetrical a curve as possible.

After the i.f. (and front end) are aligned the limiter operation should be checked. This can be done by temporarily disconnecting C_3, if the discriminator circuit of Fig. 730-A is used, disconnecting R_1 and C_1 from the upper diode's cathode in the same diagram, and inserting the milliammeter or microammeter in series with R_2 at the grounded end. This converts the discriminator to an ordinary diode rectifier. Varying the signal generator frequency over the channel, with the discriminator transformer adjusted to resonance, should show no change in output (at the band-widths used for communications purposes) as indicated by the rectified current read by the meter. At this

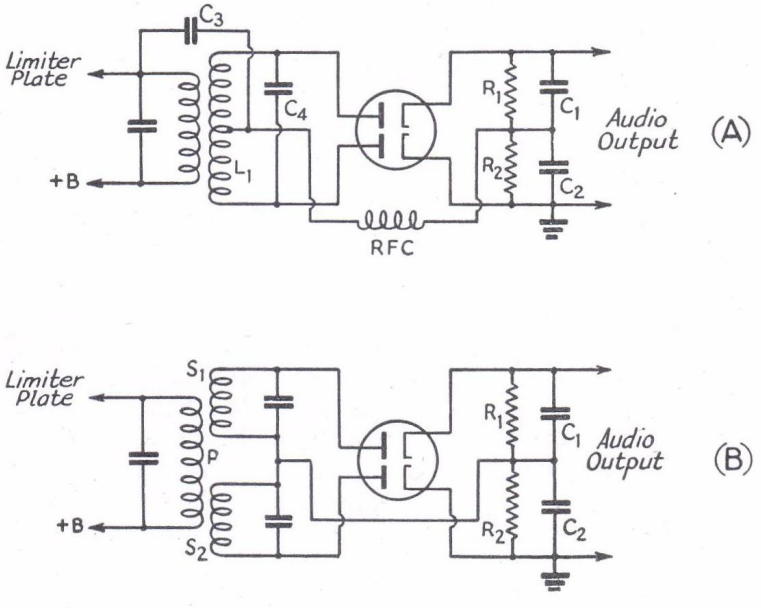

Fig. 730 — F.m. discriminator circuits. In both circuits typical values for C_1 and C_2 are 100 $\mu\mu$fd. each; R_1 and R_2, 0.1 megohm each. C_3 in A is approximately 50 $\mu\mu$fd., depending upon the intermediate frequency; *RFC* should be of the type designed for the i.f. in use (2.5 mh. is satisfactory for i.f.'s of 4 to 5 megacycles). The special three-winding transformer in B is described in the text.

In either circuit the ground may be removed from the lower end of C_2 and moved to the junction of C_1 and C_2 for push-pull audio output.

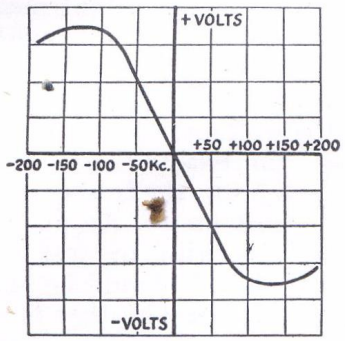

Fig. 731 — Characteristic of a typical f.m. detector. The vertical axis represents the voltage developed across the load resistor as the frequency varies from the exact resonance frequency.

A detector with this characteristic would handle f.m. signals up to a band-width of about 150 kc. over the linear portion of the curve.

point various plate and screen voltages can be tried on the limiter tube or tubes to determine the set of conditions which gives maximum output with adequate limiting (no change in rectified current).

When the limiter has been checked the discriminator connections can be restored, leaving the meter connected in series with R_1. Provision should be made for reversing the connections to the meter terminals to take care of the reversal in polarity of the net rectified current. Set the signal generator to the center frequency of the band and adjust the discriminator transformer trimmer condensers to resonance, which will be indicated by zero rectified current. Then set the test oscillator at the deviation limit (§ 5-11) on one side of the center frequency and note the meter reading. Reverse the meter terminals and set the test oscillator at the deviation limit on the other side. The two readings should be the same. If they are not, they can be made so by a slight adjustment of the primary trimmer. This will necessitate re-checking the response at resonance to make sure it is still zero. Generally speaking, the secondary trimmer will chiefly affect the zero-response frequency, while the primary trimmer will have most effect on the symmetry of the discriminator peaks. A detector curve having satisfactory linearity can be obtained by cut-and-try adjustment of both trimmers.

Tuning and operation — An f.m. receiver gives greatest noise reduction when the carrier is tuned exactly to the center of the receiver pass-band and to the point of zero response in the discriminator. Because of the decrease in noise, this point is readily recognized. Aside from this no special tuning instructions are necessary. The effectiveness of the receiver will depend almost wholly on how accurately it is aligned.

When an amplitude-modulated signal is tuned in, its modulation practically disappears at exact resonance, only those nonsymmetrical modulation components which may be present being detected. If the signal is to one side or the other of resonance, however, it will be heard and is capable of causing interference to an f.m. signal.

CHAPTER EIGHT

Power Supply

• 8-1 POWER SUPPLY REQUIREMENTS

Filament supply — Except for tubes designed for battery operation, the filaments or heaters of vacuum tubes used in both transmitters and receivers are universally operated on alternating current obtained from the power line through a step-down transformer (§ 2-9) delivering a secondary voltage equal to the rated voltage of the tubes used. The transformer should be designed to carry the current taken by the number of tubes which may be connected in parallel (§ 2-6) across it. The filament or heater transformer is generally center-tapped to provide a balanced circuit for eliminating hum (§ 3-6).

For medium- and high-power r.f. stages of transmitters, and for high-power audio stages, it is desirable to use a separate filament transformer for each section of the transmitter, installing the transformer near the tube sockets. This avoids the necessity for abnormally large wires to carry the total filament current for all stages without appreciable filament voltage drop. Maintenance of rated filament voltage is highly important, especially with thoriated-filament tubes, since under- or over-voltage may reduce filament life.

Plate supply — Direct current must be used for the plates of tubes, since any variation in plate current arising from power supply causes will be super-imposed on the signal being received or transmitted, giving an undesirable type of modulation (§ 5-1) if the variations occur at an audio-frequency (§ 2-7) rate. Unvarying direct current is commonly called *pure d.c.* to distinguish it from current which may be unidirectional but of pulsating character. The use of pure direct current on transmitting tubes is required by FCC regulations on frequencies below 60 megacycles.

Sources of plate power — D.c. plate power is usually obtained from rectified and filtered alternating current, but in low-power and portable installations may be secured from batteries. Dry batteries may be used for very low-power portable equipment, but in many cases a storage battery is used as the primary source of power, in conjunction with an interrupter to give pulsating d.c. which is applied to the primary of a step-up transformer (§ 8-10).

Rectified a.c. supplies — Since the power line voltage is ordinarily 115 or 230 volts, a step-up transformer (§ 2-9) must be used to obtain the desired voltage for the plates of the tubes in the equipment. The alternating secondary current is changed to unidirectional current by means of diode rectifier tubes (§ 3-1), then passed through an inductance-capacity filter (§ 2-11) to the load circuit. The *load resistance* in ohms is equal to the d.c. output voltage of the power supply divided by the current in amperes (Ohm's Law, § 2-6).

Voltage regulation — Since there is always some resistance in power supply circuits, and since the filter normally depends to a considerable extent upon the energy storage of inductance and capacity (§ 2-3, 2-5) the output voltage will depend upon the current drain on the supply. The change in output voltage with change in load current is called the *voltage regulation* of the supply. Expressed as a percentage,

$$\% \text{ Regulation} = \frac{100\ (E_1 - E_2)}{E_2}$$

where E_1 is the no-load voltage (no current in the load circuit) and E_2 the full-load voltage (rated current in load circuit).

• 8-2 RECTIFIERS

Purpose and ratings — A rectifier is a device which will conduct current in only one direction. The diode tube (§ 3-1) is used almost exclusively for the purpose in d.c. power supplies used with radio equipment. The important characteristics of tubes used as power supply rectifiers are the voltage drop between plate and cathode at rated current, the maximum permissible inverse peak voltage, and the permissible peak plate current.

Voltage drop — Tube voltage drop depends upon the type of tube. In vacuum rectifiers it increases with the current flowing because of space-charge effect (§ 3-1), but can be minimized by using very small spacing between plate and cathode as is done in some rectifiers for receiver power supplies. Mercury-vapor rectifiers (§ 3-5) have a constant drop of about 15 volts regardless of current. This is much smaller than the voltage drops encountered in vacuum rectifiers.

Inverse peak voltage — This is the maximum voltage developed between plate and cathode of the rectifier when the tube is not conducting; i.e., when the plate is negative with respect to the cathode.

Peak plate current — This is the maximum *instantaneous* current flowing through the rectifier. It can never be smaller than the load current in ordinary circuits, and may be several times higher.

Operation of mercury-vapor rectifiers — Because of its constant voltage drop, the mercury vapor rectifier is more susceptible to damage than the vacuum type. With the latter, the increase in voltage drop tends to limit current flow on heavy overloads, but the mercury-vapor rectifier does not have this limiting action and the cathode may be damaged under similar conditions.

In mercury-vapor rectifiers a phenomenon known as "arc-back," or breakdown of the mercury vapor and conduction in the opposite direction to normal, occurs at high inverse peak voltages, hence such tubes always should be operated within their inverse-peak voltage ratings. Arc-back also may occur if the cathode temperature is below normal, therefore the heater or filament voltage should be checked to make sure that the rated voltage is applied. This check should be made at the tube socket to avoid errors caused by drop in the leads from the filament transformer to the tube. For the same reason the cathode should be allowed to come up to its final temperature before plate voltage is applied; the time required for this is of the order of 15 to 30 seconds. When a tube is first installed or is put into service after a long period of idleness, the cathode should be heated for a period of 10 minutes or so before application of plate voltage.

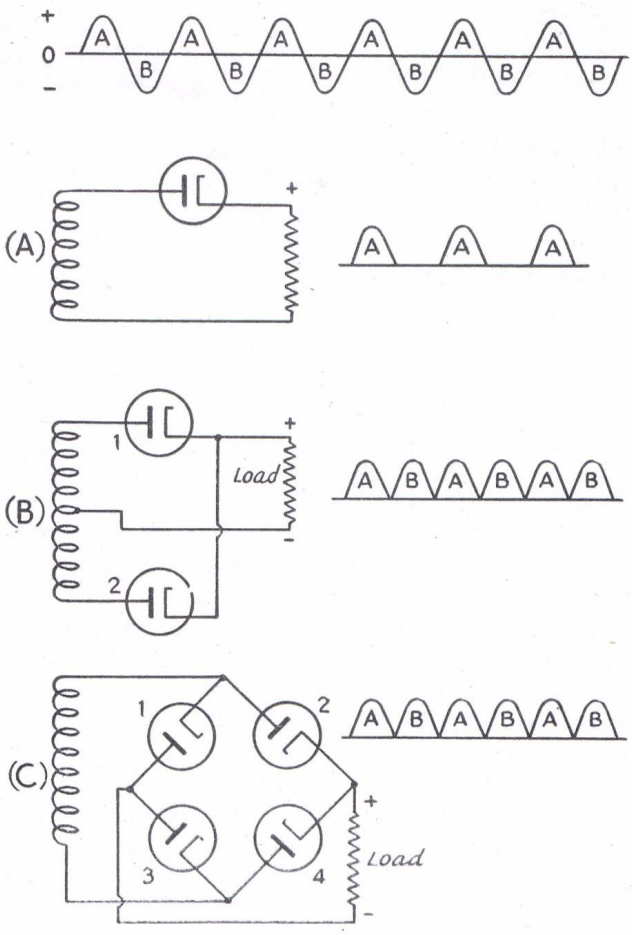

Fig. 801 — Fundamental rectifier circuits.

● 8-3 RECTIFIER CIRCUITS

Half-wave rectifiers — The simple diode rectifier (§ 3-1) is called a *half-wave rectifier* because it can pass only half of each cycle of alternating current. It is shown in Fig. 801-A. At the top of the figure is a representation of the applied a.c. voltage, with positive and negative alternations (§ 2-7) marked. When the plate is positive with respect to cathode, plate current flows through the load as indicated in the drawing at the right, but when the plate is negative with respect to cathode no current flows. This is indicated by the gaps in the output drawing. The output current is unidirectional, but pulsating.

In this circuit the inverse peak voltage is equal to the maximum transformer voltage, which in the case of a sine wave is 1.41 times the r.m.s. voltage (§ 2-7).

Full-wave center-tap rectifier — Fig. 801-B shows the "full-wave center-tap" rectifier circuit, so called because both halves of the a.c. cycle are rectified and because the transformer secondary winding must consist of two equal parts with a connection brought out from the center. When the upper end of the winding is positive, current can flow through rectifier No. 1 to the load; this current cannot pass through rectifier No. 2 because its cathode is positive with respect to its plate. The circuit is completed through the transformer center-tap. When the polarity reverses, the upper end of the winding is negative and no current can flow through rectifier No. 1, but the lower end is positive and therefore rectifier No. 2 passes current to the load, the return connection again being the center-tap. The resulting wave shape is shown at the right.

Since the two rectifiers are working alternately in this circuit, each half of the transformer secondary must be wound to deliver the full load voltage, hence the total voltage across the transformer terminals is twice that required with the half-wave rectifier. Assuming negligible voltage drop in the particular rectifier which may be conducting at any instant, the inverse peak voltage on the other rectifier is equal to the maximum voltage between the outside terminals of the transformer. In the case of a sine wave this is 1.41 times the total secondary r.m.s. voltage (§ 2-7).

Because energy is delivered to the load at twice the average rate as in the case of a half-wave rectifier, each tube carries only half the load current.

The bridge rectifier — The "bridge" type of full-wave rectifier is shown in Fig. 801-C. Its operation is as follows: When the upper end of the winding is positive, current can flow through No. 2 to the load, but not through No. 1. On the return circuit, current flows through No. 3 by way of the lower end of the transformer winding. When the polarity reverses and the lower end of the winding becomes positive, current flows through No. 4 and the load and through No. 1 by way of the upper side of the transformer. The output wave shape is shown at the right.

The inverse peak voltage is equal to the maximum transformer voltage, or 1.41 times the r.m.s. secondary voltage in the case of a sine wave (§ 2-7). Energy is delivered to the load at the same average rate as in the case of the full-wave center-tap rectifier, so that each *pair* of tubes in series carries half the load current.

• 8-4 FILTERS

Purpose of filter — As shown in Fig. 801, the output of a rectifier is pulsating d.c., which would be unsuitable for most vacuum-tube applications (§ 8-1). A *filter* is used to smooth out the pulsations so that practically unvarying direct current flows through the load circuit. The filter utilizes the energy-storage properties of inductance and capacity (§ 2-3, 2-5) by virtue of which energy stored in electromagnetic and electrostatic fields when the voltage and current are rising is restored to the circuit when the voltage and current fall, thus filling in the "gaps" or "valleys" in the rectified output.

Ripple voltage and frequency — The pulsations in the output of the rectifier can be considered to be caused by an alternating current superimposed on a steady direct current (§ 2-13). Viewed from this standpoint, the filter may be considered to consist of bypass condensers which short-circuit the a.c. while not interfering with the flow of d.c., and *chokes* or inductances which permit d.c. to flow through them but which have high reactance for the a.c. (§ 2-13). The alternating component is called the *ripple*. The effectiveness of the filter may be measured by the *percent ripple*, which is the r.m.s. value of the a.c. ripple voltage expressed as a percentage of the d.c. output voltage. With an effective filter the ripple percentage will be low. Five percent ripple is considered satisfactory for c.w. transmitters, but lower values (of the order of 0.25%) are necessary for hum-free speech transmission and receiver plate supplies.

The ripple frequency depends upon the line frequency and the type of rectifier. In general, it consists of a fundamental plus a series of harmonics (§ 2-7), the latter being relatively unimportant since the fundamental is hardest to smooth out. With a half-wave rectifier the fundamental is equal to the line frequency; with a full-wave rectifier the fundamental is equal to twice the line frequency, or 120 cycles in the case of a 60-cycle supply.

Types of filters — Inductance-capacity filters are of the low-pass type (§ 2-11), using series inductances and shunt capacitances. Practical filters are identified as *condenser-input* and *choke-input*, depending upon whether a capacity or inductance is used as the first element in the filter. Resistance-capacity filters (§ 2-11) are occasionally used in applications, particularly in receivers and speech amplifiers, where the current is very low and the voltage drop in the resistor can be tolerated.

Bleeder resistance — Since the condensers in a filter will retain their charge for a considerable time after power is removed (provided the load circuit is open at the time) it is good practice to connect a resistor across the output of the filter to discharge the condensers when the power supply is not in use. The resistance is usually high enough so that only a relatively small percentage of the total output current is consumed in it during normal operation of the supply.

Components — Filter condensers are made in several different types. Electrolytic condensers are available for voltages up to about 800, and combine high capacity with small size, since the dielectric is an extremely thin film of oxide on aluminum foil. Condensers for higher voltages are usually made with a dielectric of thin paper impregnated with oil. The *working voltage* rating of a condenser is the voltage which it will withstand continuously.

Filter chokes or inductances are wound on iron cores, with a small gap in the core to prevent magnetic saturation of the iron at high currents. When the iron becomes saturated its permeability (§ 2-5) decreases, consequently the inductance also decreases. Despite the air-gap, the inductance of a choke usually varies to some extent with the direct current flowing in the winding, hence it is necessary to specify the inductance at the current which the choke is intended to carry. Its inductance with little or no direct current flowing in the winding may be considerably higher than the load value.

• 8-5 CONDENSER-INPUT FILTERS

Ripple voltage — The conventional condenser-input filter is shown in Fig. 802-A. No simple formulas are available for computing

the ripple voltage, but it will be smaller as both capacity and inductance are made larger. Adequate smoothing for transmitting purposes can be secured by using 4 to 8 μfd. at C_1 and C_2, and 20 to 30 henrys at L_1 with 120-cycle ripple (§ 8-4). A higher ratio of inductance to capacity may be used at higher load resistances (§ 8-1).

For receivers, an additional choke, L_2, and condenser, C_3, of the same approximate values,

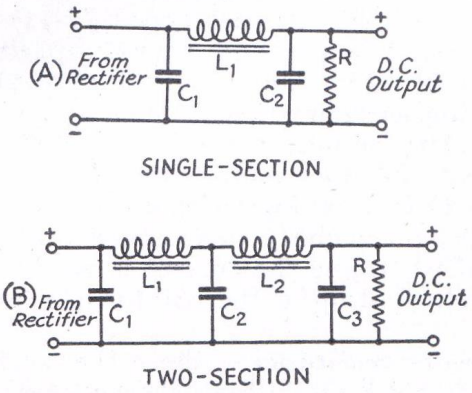

Fig. 802 — **Condenser-input filters.**

as shown in Fig. 802-B, are used to give additional smoothing. In such supplies the three condensers are generally 8 μfd. each, although the input condenser, C_1, is sometimes reduced to 4 μfd. Inductances of 10 to 20 henrys each will give satisfactory filtering with these capacity values.

For ripple frequencies other than 120 cycles, the inductance and capacity values should be multiplied by the ratio $120/F$, where F is the actual ripple frequency.

The bleeder resistance R should be chosen to draw 10% or less of the rated output current of the supply. Its value is equal to $1000E/I$, where E is the output voltage and I the load current in milliamperes.

Rectifier peak current — The ratio of rectifier peak current to average load current is high with a condenser-input filter. Small rectifier tubes designed for low-voltage supplies (type 80, etc.) generally carry load-current ratings based on the use of condenser-input filters. With rectifiers for higher power, such as the 866/866A, the load current should not exceed about 25% of the rated peak plate current of one tube when a full-wave rectifier is used, or ⅛ the rating with half-wave rectification.

Output voltage — The d.c. output voltage from a condenser-input supply will, with light loads or no load, approach the peak transformer voltage. This is 1.41 times the r.m.s. voltage (§ 2-7) of the transformer secondary in the case of Figs. 801-A and C, or 1.41 times the voltage from center-tap to one end of the secondary in Fig. 801-B. At heavy loads it may decrease to the *average* value of secondary voltage, or about 90% of the r.m.s. voltage or even less. Because of this wide range of output voltage with load current the voltage regulation (§ 8-1) of the condenser-input filter is inherently poor.

The output voltage obtainable from a given supply cannot readily be calculated, since it depends critically upon the load current and filter constants. Under average conditions it will be approximately equal to or somewhat less than the r.m.s. voltage between center-tap and one end of the secondary in the full-wave center-tap rectifier circuit (§ 8-3).

Ratings of components — Because the output voltage may rise to the peak transformer voltage at light loads, the condensers should have a working-voltage rating (§ 8-4) at least this high and preferably somewhat higher as a safety factor. Thus in the case of a center-tap rectifier having a transformer delivering 550 volts each side of the center-tap, the minimum safe condenser voltage rating will be 550 × 1.41, or 775 volts. An 800-volt or preferably a 1000-volt condenser should be used. Filter chokes should have the inductance specified at full-load current, and should have insulation between winding and core adequate to withstand the maximum output voltage.

• 8-6 CHOKE-INPUT FILTERS

Ripple voltage — The circuit of a single-section choke-input filter is shown in Fig. 803-A. For 120-cycle ripple a close approximation of the ripple to be expected at the output of the filter is given by the formula:

$$\left.\begin{matrix}\text{Single}\\ \text{Section}\\ \text{Filter}\end{matrix}\right\} \%\ \text{Ripple} = \frac{100}{LC}$$

where L is in henrys and C in μfd. The product LC must be equal to or greater than 20 to reduce the ripple to 5 per cent or less. This figure represents, in most cases, the economical limit for the single-section filter. Smaller percentages of ripple are usually more economically obtained with the two-section filter of Fig.

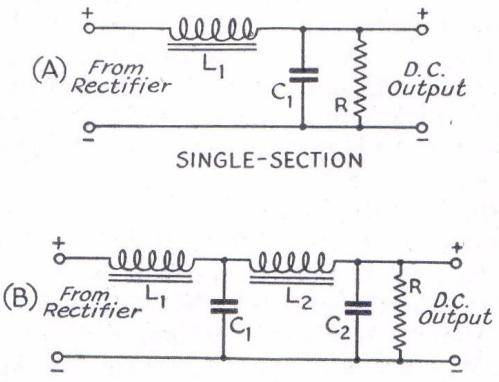

Fig. 803 — **Choke-input filters.**

803-B. The ripple percentage (120-cycle ripple) with this arrangement is given by the formula:

$$\left.\begin{matrix}\text{Two}\\ \text{Section}\\ \text{Filter}\end{matrix}\right\} \%\ \text{Ripple} = \frac{650}{L_1 L_2\ (C_1 + C_2)^2}$$

For a ripple of 0.25 per cent or less, the denominator should be 2600 or greater.

The formulas can be used for other ripple frequencies by multiplying each inductance and capacity value in the filter by the ratio $120/F$, where F is the actual ripple frequency.

The distribution of inductance and capacity in the filter will be determined by the value of input-choke inductance required (next paragraph), and the permissible a.c. output impedance. If the supply is intended for use with an audio-frequency amplifier the reactance (§ 2-8) of the last filter condenser should be small (20% or less) compared to the other a.f. resistance or impedance in the circuit, usually the tube plate resistance and load resistance (§ 3-2, 3-3). On the basis of a lower a.f. limit of 100 cycles for speech amplification (§ 5-9), this condition is usually satisfied when the output capacity (last filter capacity) of the filter is 4 to 8 μfd., the higher values being used for the lower tube and load resistances.

The input choke — The rectifier peak current and the supply voltage regulation depend almost entirely upon the inductance of the input choke in relation to the load resistance (§ 8-1). The function of the choke is to raise the ratio of average to peak current (by its energy storage) and to prevent the d.c. output voltage from rising above the average value (§ 2-7) of the a.c. voltage applied to the rectifier. For both purposes its impedance (§ 2-8) to the flow of the a.c. component (§ 8-4) must be high.

The value of input choke inductance which prevents the d.c. output voltage from rising above the average of the rectified a.c. wave is called the *critical inductance*, and for 120-cycle ripple frequency is given by the approximate formula:

$$L_{\text{crit.}} = \frac{\text{Load resistance (ohms)}}{1000}$$

For other ripple frequencies, the inductance required will be the above value multiplied by the ratio of 120 to the actual ripple frequency.

With inductance values less than critical the d.c. output voltage will rise because the filter tends to act as a condenser-input filter (§ 8-5). With critical inductance the peak plate current of one tube in a center-tap rectifier will be approximately 10% higher than the d.c. load current taken from the supply.

An inductance of twice the critical value is called the *optimum* value. It gives a further reduction in the ratio of peak to average plate current, and represents the point at which further increase in inductance does not give a corresponding return in improved operating characteristics.

Swinging chokes — The formula for critical inductance indicates that the inductance required varies widely with the load resistance. In the case where there is no load except the bleeder (§ 8-4) on the power supply the critical inductance required is highest; much lower values are satisfactory when the full-load current is being delivered. Since the inductance of a choke tends to rise as the direct current flowing through it is decreased (§ 8-4) it is possible to effect an economy in materials by designing the choke to have a "swinging" characteristic such that it has the required critical inductance value with the bleeder load only, and about the optimum inductance value at full load. Thus in the case where the bleeder resistance is 20,000 ohms and the full-load resistance (including the bleeder) 2500 ohms, a choke which swings from 20 henrys to 5 henrys over the full output-current range will fulfill the requirements.

Resonance — Resonance effects in the series circuit across the output of the rectifier formed by the first choke (L_1) and first filter condenser (C_1) must be avoided, since the ripple voltage would build up to large values (§ 2-10). This is not only the opposite action to that for which the filter is intended, but also may cause excessive rectifier peak currents and abnormally high inverse-peak voltages. For full-wave rectification the ripple frequency will be 120 cycles for a 60-cycle supply (§ 8-4) and resonance will occur when the product of choke inductance in henrys times condenser capacity in microfarads is equal to 1.77. The corresponding figure for 50-cycle supply (100-cycle ripple frequency) is 2.53 and for 25-cycle supply (50-cycle ripple frequency) 13.5. At least twice these products should be used to ensure that no resonance effects will be present.

Output voltage — Provided the input-choke inductance is at least the critical value, the output voltage may be calculated quite closely by the equation:

$$E_o = 0.9E_t - \frac{(I_b + I_L)\ (R_1 + R_2)}{1000} - E_r$$

where E_o is the output voltage; E_t is the r.m.s. voltage applied to the rectifier (r.m.s. voltage between center-tap and one end of the secondary in the case of the center-tap rectifier); I_b and I_L are the bleeder and load currents, respectively, in milliamperes; R_1 and R_2 are the resistances of the first and second filter chokes; and E_r is the drop between rectifier plate and cathode (§ 8-2). These voltage drops are shown in Fig. 804.

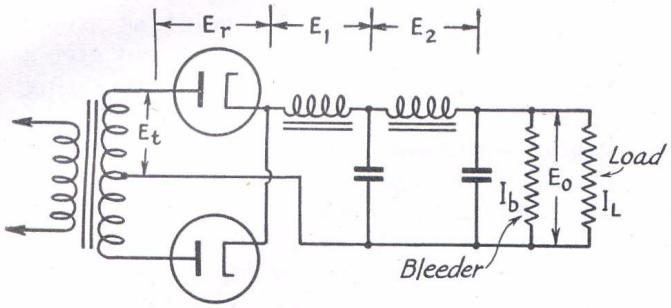

Fig. 804 — Voltage drops in the power supply circuit.

At no load I_L is zero, hence the no-load voltage may be calculated on the basis of bleeder current only. The voltage regulation may be determined from the no-load and full-load voltages (§ 8-1).

Ratings of components — Because of better voltage regulation, filter condensers are subjected to smaller variations in d.c. voltage than in the condenser-input filter (§ 8-5). However, it is advisable to use condensers rated for the peak transformer voltage in case the bleeder resistor should burn out when there is no external load on the power supply, since in this case the voltage will rise to the same maximum value as with a condenser-input filter.

The input choke may be of the swinging type, the required no-load and full-load inductance values being calculated as described above. The second choke (*smoothing choke*) should have constant inductance with varying d.c. load currents. Values of 10 to 20 henrys are ordinarily used. Since chokes are usually placed in the positive leads, the negative being grounded, the windings should be insulated from the core to withstand the full d.c. output voltage of the supply.

• 8-7 THE PLATE TRANSFORMER

Output voltage — The output voltage of the plate transformer depends upon the required d.c. load voltage and the type of rectifier circuit. With condenser-input filters the r.m.s. secondary voltage is usually made equal to or slightly more than the d.c. output voltage, allowing for voltage drops in the rectifier tubes and filter chokes as well as in the transformer itself. The full-wave center-tap rectifier requires a transformer giving this voltage each side of the secondary center-tap (§ 8-3).

With a choke-input filter the required r.m.s. secondary voltage (each side of center-tap for a center-tap rectifier) can be calculated by the equation:

$$E_t = 1.1\left[E_o + \frac{I(R_1 + R_2)}{1000} + E_r\right]$$

where E_o is the required d.c. output voltage, I is the load current (including bleeder current) in milliamperes, R_1 and R_2 are the resistances of the filter chokes, and E_r is the voltage drop in the rectifier. E_t is the full load r.m.s. (§ 2-7) secondary voltage; the open-circuit voltage usually will be 5% to 10% higher.

Volt-ampere rating — The volt-ampere rating (§ 2-8) of the transformer depends upon the type of filter (condenser or choke input). With a condenser-input filter the heating effect in the secondary is higher because of the high ratio of peak to average current, consequently the volt-amperes consumed by the transformer may be several times the watts delivered to the load. With a choke-input filter, provided the input choke has at least the critical inductance (§ 8-6), the secondary volt-amperes can be calculated quite closely by the equation:

$$\text{Sec. V.A.} = 0.00075\ EI$$

where E is the *total* r.m.s. voltage of the secondary (between the outside ends in the case of a center-tapped winding) and I is the d.c. output current in milliamperes (load current plus bleeder current). The primary volt-amperes will be 10% to 20% higher because of transformer losses.

• 8-8 VOLTAGE STABILIZATION

Gaseous regulator tubes — There is frequent need for maintaining the voltage applied to a low-voltage, low-current circuit (such as the oscillator in a superhet receiver or the frequency-controlling oscillator in a transmitter) at a practically constant value regardless of the voltage regulation of the power supply or variations in load current. In such applications gaseous regulator tubes (VR105–30, VR150–30, etc.) can be used to good advantage. The voltage drop across such tubes is constant over a moderately-wide current range. The first number in the tube designation indicates the terminal voltage, the second the maximum permissible tube current.

The fundamental circuit for a gaseous regulator is shown in Fig. 805-A. The tube is connected in series with a *limiting resistor*, R_1, across a source of voltage which must be higher than the *starting* voltage, or voltage required for ionization of the gas in the tube. The starting voltage is about 30% higher than the operating voltage. The load is connected in parallel with the tube. For stable operation a minimum tube current of 5 to 10 milliamperes is required. The maximum permissible current with most types is 30 milliamperes, consequently the load current cannot exceed 20 to 25 milliamperes if the voltage is to be stabilized over a range from zero to maximum load current.

The value of the limiting resistor must lie between that which just permits minimum tube current to flow and that which just passes the maximum permissible tube current when

there is no load current. The latter value is generally used. It is given by the equation

$$R = \frac{1000\ (E_s - E_r)}{I}$$

Where R is the limiting resistance in ohms, E_s the voltage of the source across which tube and resistor are connected, E_r is the rated voltage drop across the regulator tube, and I is the maximum tube current in milliamperes (usually 30 ma.).

Fig. 805-B shows how two tubes may be used in series to give a higher regulated voltage than is obtainable with one, and also to give two values of regulated voltage. The limiting resistor may be calculated as above, using the sum of the voltage drops across the two tubes for E_r. Since the upper tube must carry more current than the lower, the load connected to the low-voltage tap must take small current. The total current taken by the loads on both the high and low taps should not exceed 20 to 25 milliamperes.

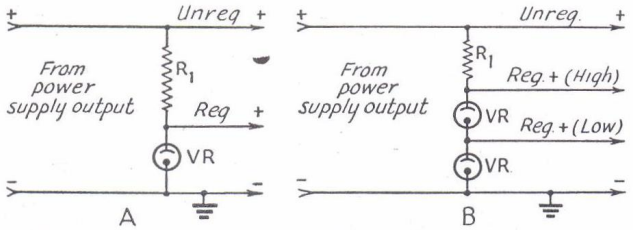

Fig. 805 — **Voltage stabilizing circuits using gaseous regulator tubes.**

Voltage regulation of the order of 1% can be obtained with tubes of this type.

Electronic voltage regulation — A voltage regulator circuit suitable for higher voltages and currents than the gas tubes, and also having the feature that the output voltage can be varied over a rather wide range, is shown in Fig. 806. A high-gain voltage amplifier tube (§ 3-3), usually a sharp-cutoff pentode (§ 3-5) is connected in such a way that a small change in the output voltage of the power supply causes a change in grid bias and thereby a corresponding change in plate current. Its plate current flows through a resistor (R_5) the voltage drop across which is used to bias a second tube — the "regulator" tube — whose plate-cathode circuit is connected in series with the load circuit. The regulator tube therefore functions as an automatically-variable series resistor. Should the output voltage increase slightly, the bias on the control tube becomes more positive, causing the plate current of the control-tube to increase and the drop across R_5 to increase correspondingly. The bias on the regulator tube therefore becomes more negative and the effective resistance of the regulator tube increases, causing the terminal voltage to drop. A decrease in output voltage causes the reverse action. The time lag in the action of the system is negligible and with proper circuit constants, the output voltage can be held within a fraction of a per cent of the desired value throughout the useful range of load currents and over a wide range of supply voltages.

An essential in the system is the use of a constant-voltage bias source for the control tube. The voltage change which appears at the grid of the tube is the *difference* between a fixed negative bias and a positive voltage which is taken from the voltage divider across the output. To get the most effective control, the negative bias must not vary with plate current. The most satisfactory type of bias is a dry battery of 45 to 90 volts, but a gaseous regulator tube (VR75-30) or a neon bulb of the type without the resistor in the base may be used instead. This is indicated in the diagram. If the gas tube or neon bulb is used, a negative-resistance type of oscillation (§ 3-7) may take place at audio frequencies or above, in which case a condenser of 0.1 μfd. or more should be connected across it. A similar condenser between the control tube grid and cathode is also frequently helpful in this respect.

The variable resistor R_3 is used to adjust the bias on the control tube to the proper operating value. It also serves as an output voltage control, setting the value of regulated voltage within the existing operating limits.

The maximum output voltage obtainable is equal to the power supply voltage minus the minimum drop through the regulator tube. This drop is of the order of 50 volts with the

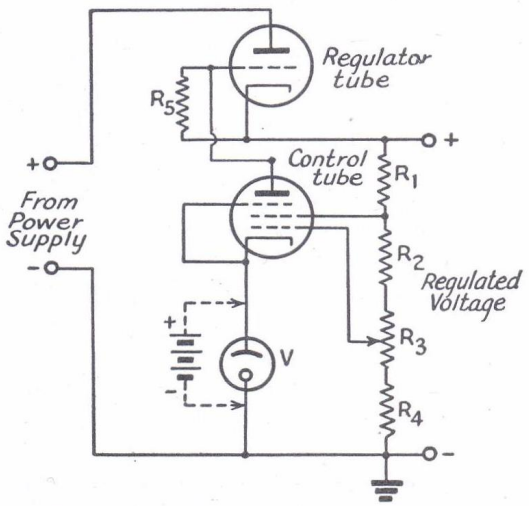

Fig. 806 — **Electronic voltage regulator. The regulator tube is ordinarily a 2A3 or a number of them in parallel, the control tube a 6SJ7 or similar type. The filament transformer for the regulator tube must be insulated for the plate voltage, and cannot supply current to other tubes when a filament-type regulator tube is used. Typical circuit values are as follows: R1, 10,000 ohms; R2, 25,000 ohms; R3, 10,000-ohm potentiometer; R4, 5000 ohms; R5, 0.5 megohm.**

tubes ordinarily used (power triodes having low plate resistance, such as the 2A3). The maximum current is also limited by the regulator tube; 100 milliamperes is a safe value for a 2A3. Two or more regulator tubes may be connected in parallel to increase the current-carrying capacity, no other changes in the circuit being required.

● 8-9 BIAS SUPPLIES

Requirements — A bias supply is not called upon to deliver current to a load circuit but simply to furnish a fixed grid voltage to set the operating point of a tube (§ 3-3). However, in most applications it is nevertheless true that current flows through the bias supply, because such supplies are chiefly used in connection with power amplifiers of the Class-B and Class-C type where grid-current flow is a feature of operation (§ 3-4). In circuit design a bias supply resembles the rectified a.c. plate supply (§ 8-1), having a transformer-rectifier-filter system employing similar circuits. Bias supplies may be classified in two types, those furnishing only *protective* bias, intended to prevent excessive plate current flow in a power tube in case of loss of grid leak bias (§ 3-6) from excitation failure, and those which furnish the actual *operating* bias for the tubes. In the former type voltage regulation (§ 8-1) is relatively unimportant; in the latter it may be of considerable importance.

In general, a bias supply should have well-filtered d.c. output, especially if it furnishes the operating bias for the stage, since ripple voltage may modulate the signal on the grid of the amplifier tube (§ 5-1). Condenser-input filters are generally used, since the regulation of the supply is not a function of the filter. The constants discussed in § 8-5 are applicable.

Voltage regulation — A bias supply must always have a bleeder resistance (§ 8-4) connected across its output terminals to provide a d.c. path from grid to cathode of the tube being biased. Although the grid circuit takes no current from the supply, grid current flows through the bleeder resistor and the voltage across the resistor therefore varies with grid current. This variation in voltage is practically independent of the design of the bias supply unless special voltage-regulating means are used.

Protective bias — This type of bias supply is designed to give an output voltage sufficient to bias the tube to which it is applied to or near the plate-current cut-off point (§ 3-2). A typical circuit is given in Fig. 807. The resistance R_1 is the grid-leak resistor (§ 3-6) for the amplifier tube with which the supply is used, and the normal operating bias is developed by the flow of grid current through this

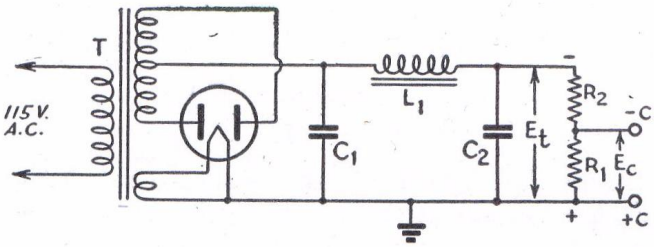

Fig. 807 — Supply for furnishing protective bias to a power amplifier. The transformer T should furnish a peak voltage at least equal to the protective bias required. Other constants are discussed in the text.

resistor. R_2 is connected in series with R_1 across the output of the supply to reduce the voltage across R_1, when there is no grid-current flow, to the cut-off value for the tube being biased. R_2 is given by the formula

$$R_2 = \frac{E_t - E_c}{E_c} \times R_1$$

where E_t is the output voltage of the supply with R_2 and R_1 in series as a load, E_c is the cut-off bias for the tube with which the supply is used, and R_1 is as described above.

When such a supply is used with a Class-C amplifier, the voltage across R_1 from grid-current flow will normally be higher than that from the bias supply itself, since the latter is adjusted to cut-off while the operating bias will be twice cut-off or higher (§ 3-4). In some cases the grid-leak voltage may even exceed the peak output voltage of the transformer (1.41 times half the total secondary voltage, in the circuit shown). The filter condensers in such a bias supply must therefore be rated to stand the maximum operating bias voltage on the Class-C amplifier, if this voltage exceeds the nominal output voltage of the supply.

Voltage stabilization — When the bias supply furnishes operating rather than simply protective bias, the value of bias voltage should be as constant as possible even when the grid current of the biased tube varies. A simple method of improving bias voltage regulation is to make the bleeder resistance low enough so that the current through it from the supply is several times the maximum grid current to be expected. By this means the percentage variation in current is reduced. This method, however, requires that a considerable amount of power be dissipated in the bleeder, which in turn calls for a relatively large power transformer and filter choke.

Bias voltage variation may also be reduced by means of a regulator tube, as shown in Fig. 808. The regulator tube is usually a triode having a plate-current rating adequate to carry the expected grid current. It is cathode-biased (§ 3-6) by the resistor R_1, which is of the order of several hundred thousand ohms or a few megohms so that with no grid current the tube

is biased practically to cut-off. Because of this high resistance, the grid current will flow through the plate resistance of the regulator tube, which is comparatively low, rather than through R_1 and R_2, hence the voltage from the supply across R_1 and the cathode-plate circuit of the regulator tube in series can be

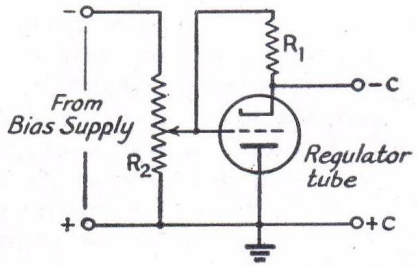

Fig. 808 — **Automatic voltage regulator for bias supplies. For best operation the tube used should be one of high mutual conductance (§ 3-2).**

considered constant. The bias voltage is equal to the voltage across the tube alone. When grid current flows the voltage across the tube will tend to increase, hence the drop across R_1 decreases, lowering the bias on the regulator and reducing its plate resistance. This in turn reduces the tube voltage drop, and the bias voltage tends to remain constant over a fairly wide range of grid current values.

At low bias voltages it may be necessary to use a number of tubes in parallel to get sufficient variation of plate resistance for good regulating action. The bias supply must furnish the required bias voltage plus the voltage required to bias the regulator tube to cut-off, considering the output bias voltage as the plate voltage applied to the regulator. The current taken from the bias supply is negligible. R_2 may be tapped to provide a range of bias voltages to meet different tube requirements.

Multi-stage bias supplies — When several power amplifier tubes are to be biased from a

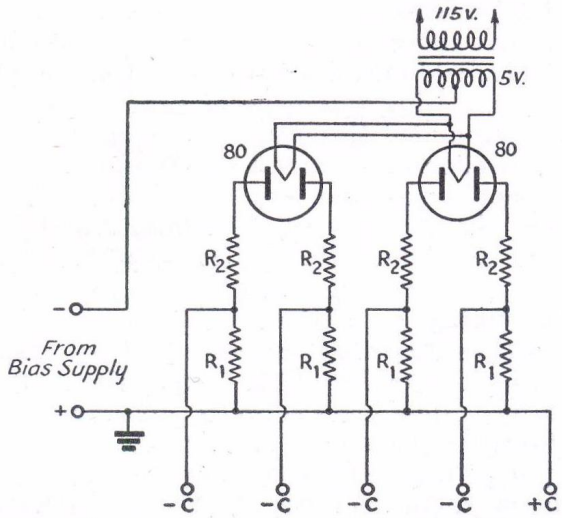

Fig. 809 — **Isolating circuit for multiple-stage bias supply.**

single supply, the various bias circuits must be isolated by some means. If the grid currents of all stages should flow through a single bleeder resistor a variation in grid current in one stage would change the bias on all, a condition which would interfere with effective adjustment and operation of the transmitter.

When protective bias is to be furnished several stages, the circuit arrangement of Fig. 809, using rectifier tubes to isolate the individual grid-leaks of the various stages, may be employed. In the diagram two type 80 rectifiers are used to furnish bias to four stages. Each pair of resistors (R_1R_2) constitutes a separate bleeder across the bias supply. R_1 is the grid-leak for the biased stage; R_2 is a dropping resistor to adjust the voltage across R_1 to the cut-off value (without grid-current flow) for the biased tube. The values of R_1 and R_2 may be calculated as described in the paragraph on protective bias. In this case the bias supply should be designed to have inherently good voltage regulation; i.e., a choke-input filter with appropriate filter and bleeder con-

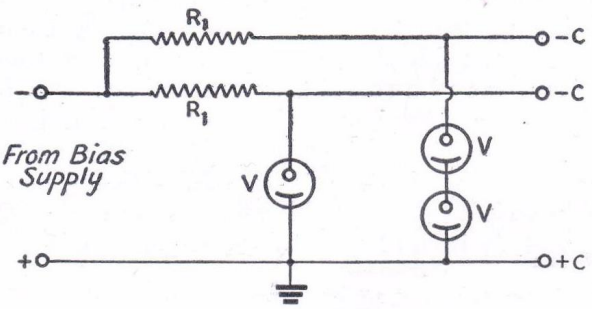

Fig. 810 — **Use of gaseous regulator tubes to stabilize bias voltage.**

stants (§ 8-6) should be used, the bleeder being separate from those associated with the rectifier tubes. When the voltage across R_1R_2 rises because of grid-current flow through R_1, the load on the supply will vary (hence the necessity for good voltage regulation in the supply) but there is no interaction of grid currents in the separate bleeders because the rectifiers can pass current in only one direction.

When a single supply is to furnish operating bias for several stages, a separate regulator tube circuit (Fig. 808) may be used for each one. Individual voltages for the various stages may be obtained by appropriate taps on R_2.

Well-regulated bias for several stages may be obtained by the use of gaseous regulator tubes when the voltage and current ratings of the tubes permit their use. This is shown in Fig. 810. A single tube or two or more in series can be used to give the desired bias voltage drop; the bias supply voltage must be high enough to provide starting voltage for the tubes in series. R_1 is the protective resistance (§ 8-8); its value should be calculated for mini-

mum stable tube current. The maximum grid current that can be handled is 20 to 25 milliamperes with available regulator tubes.

• 8-10 MISCELLANEOUS POWER SUPPLY CIRCUITS

Voltage dividers — A voltage divider is a resistance connected across a source of voltage and tapped at appropriate points from which voltages lower than the terminal voltage may be taken (§ 2-6). Since the voltage at any tap depends upon the current drawn from the tap, the voltage regulation (§ 8-1) of such a divider is inherently poor. Hence a voltage divider is best suited to applications where the currents drawn are constant, or where separate voltage-regulating circuits (§ 8-8) are used to compensate for voltage variations at the taps.

A typical voltage divider arrangement is shown in Fig. 811. The terminal voltage is E, and two taps are provided to give lower voltages E_1 and E_2 at currents I_1 and I_2 respectively. The smaller the resistance between taps in proportion to the total resistance, the smaller the voltage between the taps. In addition to the load currents I_1 and I_2 there is also the bleeder current, I_b. The voltage divider may be the bleeder for the power supply. For convenience, the voltage divider in the figure is considered to be made up of separate resistances, R_1, R_2, R_3, between taps. R_1 carries only the bleeder current, I_b. R_2 carries I_1 in addition to I_b; R_3 carries I_2, I_1

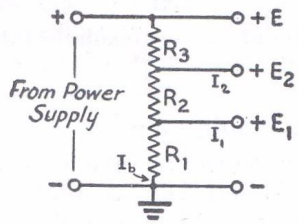

Fig. 811 — **Typical voltage-divider circuit.**

and I_b. For the purpose of calculating the resistances required, a bleeder current I_b must be assumed; generally it is low compared to the total load current (10% or so). Then

$$R_1 = \frac{E_1}{I_b}$$

$$R_2 = \frac{E_2 - E_1}{I_b + I_1}$$

$$R_3 = \frac{E - E_2}{I_b + I_1 + I_2}$$

the currents being expressed in amperes.

The method may be extended to any desired number of taps, each resistance section being calculated by Ohm's Law (§ 2-6) using the voltage drop across it and the total current through it. The power dissipated by each section may be calculated by multiplying the same quantities together.

In case it is desired to have the bleeder resistance total to a predetermined value, the same method of calculation may be followed, but different values of bleeder current should be tried until the correct result is found.

Transformerless plate supplies — It is possible to rectify the line voltage directly, without using a step-up power transformer, for certain applications (such as some types of receivers) where the low voltage so obtained is satisfactory. A simple power supply system of this type, using a half-wave rectifier, is shown in Fig. 812. Tubes for this purpose are provided with heaters operating at relatively high voltages (25, 35, 70, or 115 volts) which can be connected across the line in series with other tube filaments and/or a resistor R of suitable value to limit the current to the rated value for the tube heater. The rectifier is often

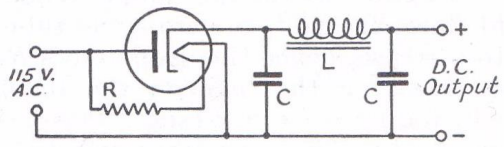

Fig. 812 — **Transformerless plate supply with half-wave rectifier.**

incorporated in the same tube envelope with an audio power amplifier tube.

The half-wave circuit shown has a fundamental ripple frequency equal to the line frequency (§ 8-4) and hence requires more inductance and capacity in the filter for a given ripple percentage (§ 8-5) than the full-wave rectifier. A condenser-input filter is generally used, frequently with a second choke and third condenser (§ 8-5) to provide the necessary smoothing.

A disadvantage of the transformerless circuit is that no ground connection can be used on the power supply unless care is used to insure that the grounded side of the power line is connected to the grounded side of the supply. Receivers using this type of supply are generally grounded through a low capacity (0.05 μfd.) condenser to avoid short-circuiting the line should the line plug be inserted in the socket the wrong way. The input condenser should be at least 16 and preferably 32 μfd. to keep the output voltage high and to improve voltage regulation.

Voltage-doubling circuits — The circuit arrangement of Fig. 813, frequently used in transformerless plate supplies, gives full-wave rectification combined with doubling of the output voltage. This is accomplished by using a double-diode rectifier, one section of which charges C_1 when the line polarity between its plate and cathode is positive while the other

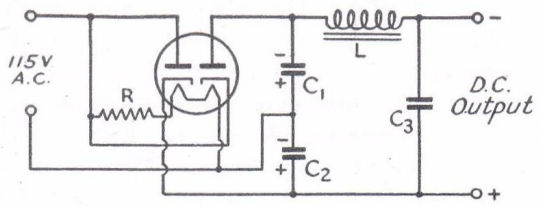

Fig. 813 — **Full-wave voltage-doubling transformerless plate supply circuit.**

section charges C_2 when the line polarity reverses. Each condenser is thus charged separately to the same d.c. voltage, and they discharge in series into the load circuit. For effective operation of this circuit the capacities of C_1 and C_2 must be at least 16 μfd. each and preferably higher.

The ripple frequency with this circuit is twice the line frequency, since it is a full-wave circuit (§ 8-4). The voltage regulation is inherently poor and depends critically upon the capacities of C_1 and C_2, being better as these capacities are made larger. A typical supply with 16 μfd. each at C_1 and C_2 will have an output voltage of approximately 300 at light loads, dropping to about 210 volts at the rated current of 75 milliamperes.

No direct ground can be used on this supply or on the equipment with which it is used. If an r.f. ground is made through a condenser, the condenser capacity should be small (about 0.05 μfd.) since it is in shunt from plate to cathode of one rectifier. A large capacity (low reactance) would by-pass the rectifier and thereby nullify its operation.

Duplex plate supplies — In some cases it may be advantageous economically to obtain two plate supply voltages from a single power supply, making one or more of the components serve a double purpose. Two circuits of this type are shown in Figs. 814 and 815.

In Fig. 814 a bridge rectifier is used to obtain the full transformer voltage, while a connection is also brought out from the center tap to obtain a second voltage corresponding to half the total transformer secondary voltage. The sum of the currents drawn from the two taps should not exceed the d.c. ratings of the rectifier tubes and transformer. Filter values for each tap should be computed separately (§ 8-6).

Fig. 815 shows how a transformer with multiple secondary taps may be used to obtain both high and low voltages simultaneously. A separate full-wave rectifier is used at each tap. The filter chokes are placed in the common negative lead, but separate filter condensers are required. The sum of the currents drawn from each tap must not exceed the transformer rating and the chokes must be rated to carry the total load current. Each bleeder resistance should have a value in ohms of 1000 times the maximum rated inductance in henrys of the swinging choke, L_1, for best regulation (§ 8-6).

Rectifiers in parallel — Vacuum-type rectifiers may be connected in parallel (plate to plate and cathode to cathode) for higher current carrying capacity. No circuit changes are required.

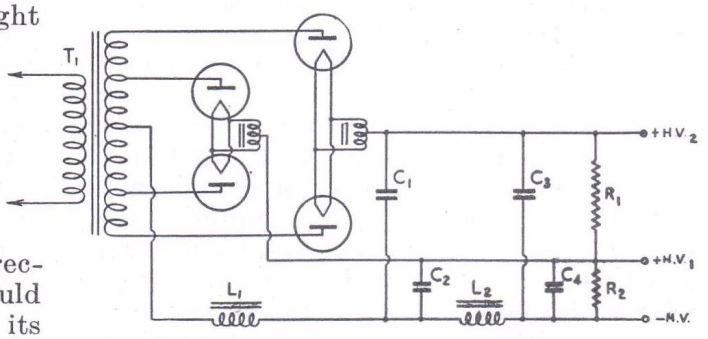

Fig. 815 — **Power supply circuit in which a single transformer and set of chokes serve for two different voltages.**

When mercury vapor rectifiers are connected in parallel, slight differences in tube characteristics may make one ionize at a slightly lower voltage than the other. Since the ignition voltage is higher than the operating voltage, this means that the first tube to ionize carries the whole load, since the voltage drop is then too low to ignite the second tube. This condition can be prevented by connecting resistors of 50 to 100 ohms in series with each plate as shown in Fig. 816, thereby insuring that a high-enough voltage for ignition will always be available.

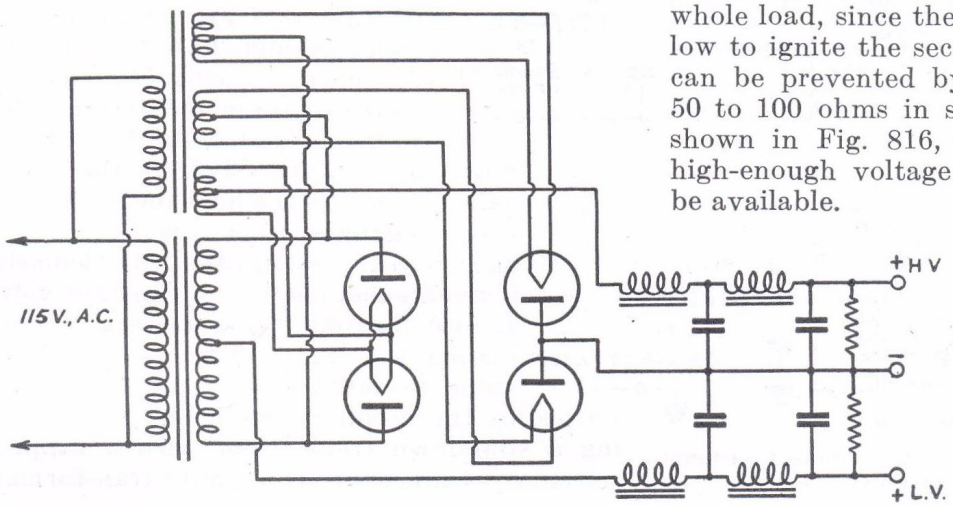

Fig. 814 — **Combination bridge and center-tap rectifier to deliver two output voltages with good regulation.**

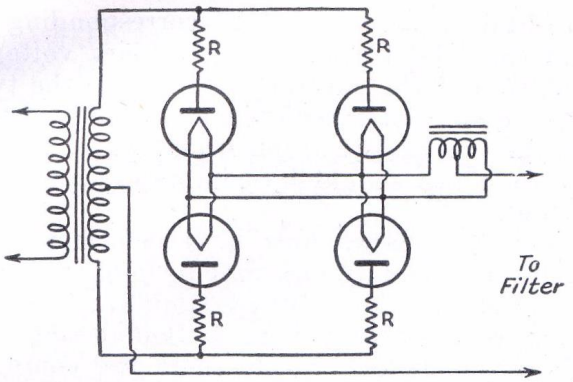

Fig. 816 — Operating mercury-vapor rectifiers in parallel. Resistors marked R should have values between 50 and 100 ohms.

Vibrator power supplies — For portable or mobile work the most common source of power for both filaments and plates is the 6-volt automobile-type storage battery. Filaments may be heated directly from the battery, while plate power is obtained by passing current from the battery through the primary of a suitable transformer, interrupting it at regular intervals to give the changing magnetic field required for inducing a voltage in the secondary (§ 2-5), and rectifying the secondary output. The rectified output is pulsating d.c. which may be filtered by ordinary means (§ 8-5).

Fig. 817 shows two types of circuits used, both with vibrating-reed interrupters (*vibrators*). At A is shown the *non-synchronous* type of vibrator. When the battery circuit is open the reed is midway between the two contacts, touching neither. On closing the battery circuit the magnet coil pulls the reed into contact with the lower point, causing current to flow through the lower half of the transformer primary winding. Simultaneously the magnet coil is short-circuited and the reed swings back, and is carried by inertia into contact with the upper point, causing current to flow through the upper half of the transformer primary. The magnet coil is again energized and the cycle repeats itself, usually at a rate about equivalent to a 60-cycle supply frequency.

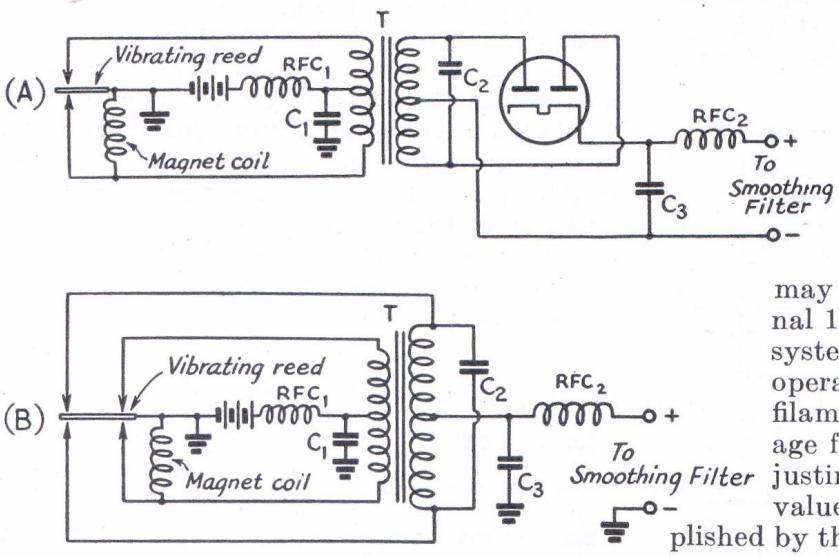

Fig. 817 — Vibrator power supply circuits. Constants and operation are discussed in the text.

The synchronous circuit of Fig. 817-B is provided with an extra pair of contacts which rectify the secondary output of the transformer, thus eliminating the need for a separate rectifier tube. The secondary center-tap furnishes the positive output terminal when the relative polarities of primary and secondary windings are correct. The proper connections may be determined by experiment, reversing the secondary connections if the first trial is wrong.

The buffer condenser, C_2, across the transformer secondary is used to absorb surges which would occur on breaking the current, when the magnetic field collapses practically instantaneously and hence causes a very high voltage to be induced in the secondary (§ 2-5). Its value is usually between 0.005 and 0.03 μfd. and for 250–300 volt supplies should be rated at 1500 to 2000 volts d.c. The proper value is rather critical and should be determined experimentally, the optimum value being that which results in least battery current for a given rectified d.c. output from the supply.

Sparking at the vibrator contacts causes r.f. interference ("hash") when such a supply is used with a receiver. This can be minimized by installing hash filters, consisting of RFC_1 and C_1 in the battery circuit, and RFC_2 with C_3 in the d.c. output circuit. C_1 is usually from 0.5 to 1 μfd., a 50-volt rating being adequate. RFC_1 consists of about 50 turns wound to about half-inch diameter, No. 12 or No. 14 wire being required to carry the rather heavy battery current without undue loss of voltage. C_3 may be of the order of 0.01 to 0.1 μfd., and RFC_2 a 2.5-millihenry choke of ordinary design. Equally as important as the hash filter is thorough shielding of the power supply and its connecting leads, since even a small piece of wire or metal will radiate enough hash to cause interference in a sensitive receiver.

Line-voltage adjustment — In some localities the line voltage may vary considerably from the nominal 115 volts as the load on the power system changes. Since it is desirable to operate tube equipment, particularly filaments and heaters, at constant voltage for maximum life, a means of adjusting the line voltage to the rated value is desirable. It can be accomplished by the circuit shown in Fig. 818, utilizing a step-down transformer with a tapped secondary connected as an auto-transformer

(§ 2-9). The secondary should preferably be tapped in steps of two or three volts, and should have sufficient total voltage to compensate for the widest variations encountered. Depending upon the end of the secondary to which the line is connected, the voltage to the load can be made either higher or lower than the line voltage. A secondary winding capable of carrying five amperes or so will be adequate for loads up to 500 volt-amperes on a 115-volt line.

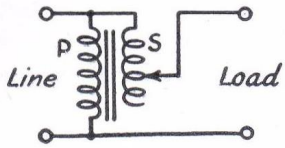

Fig. 818 — Line-voltage compensation by means of tapped step-down transformer.

CHAPTER NINE

Wave Propagation

• 9-1 RADIO WAVES

Nature of radio waves — Radio waves are electromagnetic waves, consisting of traveling electrostatic and electromagnetic fields so related to each other that the energy is evenly divided between the two, and with the lines of force in the two fields at right angles to each other in a plane perpendicular to the direction of propagation as shown in Fig. 901. Except for the difference in order of wavelength, they have the same nature as light waves, travel with the same speed (300,000,000 meters per second in space), and, similarly to light, can be reflected, refracted and diffracted.

Polarization — The polarization of a radio wave is taken as the direction of the lines of force in the electrostatic field. If the direction of the electrostatic component is perpendicular to the earth, the wave is said to be *vertically-polarized*, while if the electrostatic component is parallel to the earth the wave is *horizontally polarized*. The electromagnetic component, being at right-angles to the electrostatic, therefore has its lines of force vertical when the wave is horizontally polarized, and horizontal when the wave is vertically polarized.

Reflection — Radio waves may be reflected from any sharply-defined discontinuity, of suitable characteristics and dimensions, in the medium in which they are propagated. Any good conductor meets this requirement provided its dimensions are at least comparable with the wavelength. The surface of the earth also forms such a discontinuity, and waves are readily reflected from the earth.

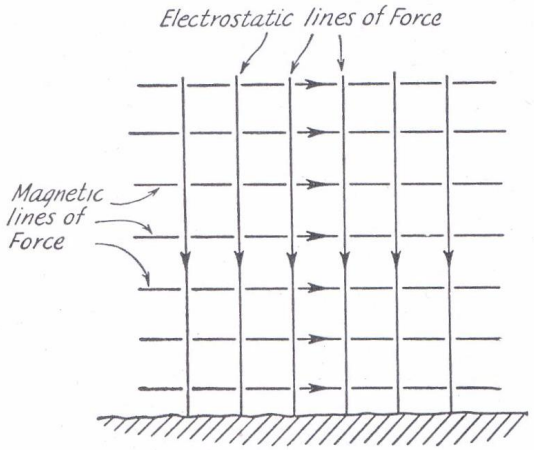

Fig. 901 — Representation of electrostatic and electromagnetic lines of force in a radio wave. Arrows indicate instantaneous directions of the fields for a wave traveling out of the page toward the reader. Reversing the direction of one set of lines would reverse the direction of travel.

Refraction — Refraction of radio waves is similar to the refraction of light; that is, the wave is bent when moving obliquely into a region having a different refractive index from that of the region it leaves. This bending results because the velocity of propagation differs in the two regions, so that the part of the wavefront which enters first travels faster or slower than the part which enters the new region last, causing the wavefront to turn.

Diffraction — When a wave grazes the edge of an object in passing it is bent around the object. This bending is called *diffraction.*

Ground and sky waves — Two types of waves occur, one traveling along the surface of the ground, the other traveling through the atmosphere and having no contact with the ground along most of its path. The former is called the *ground wave*, the latter the *sky wave.* The ground wave dies out rather rapidly, but the sky wave can travel to great distances, especially on high frequencies (short wavelengths).

Field strength — The intensity of the electrostatic field of the wave is called the *field strength* at the point of measurement. It is usually expressed in microvolts per meter, and is equivalent to the voltage induced in a wire one meter long placed with its axis parallel to the direction of polarization.

• 9-2 THE GROUND WAVE

Description — The ground wave is continuously in contact with the surface of the earth and, in cases where the distance of transmission makes the curvature of the earth important, is propagated by means of diffraction, with refraction in the lower atmosphere also having some effect. The ground wave is practically independent of seasonal and day and night effects at high frequencies (above 1500 kc.).

Polarization — A ground wave must be vertically polarized because the electrostatic field of a horizontally-polarized wave would be short-circuited by the ground, which acts as a conductor at the frequencies for which the ground wave is of most interest.

Ground characteristics and losses — The

wave induces a current in the ground in traveling along its surface. If the ground were a perfect conductor there would be no loss of energy, but actual ground has appreciable resistance so that the current flow causes some energy dissipation. This loss must be supplied by the wave, which is correspondingly weakened. Hence the transmitting range depends upon the ground characteristics. Because sea water is a good conductor, the range will be greater over the ocean than over land. The losses increase with frequency, so that the ground wave is rapidly attenuated at high frequencies and above about 2 megacycles is of little importance except in purely local communication.

Range of ground wave — At frequencies in the vicinity of 2 megacycles the ground wave range is of the order of 200 miles over average land and perhaps two or three times as far over sea water, for a medium-power transmitter (500 watts or so) using a good antenna. At higher frequencies the range drops off rapidly, and above 4 megacycles the ground wave is useful only for work over quite short distances.

• 9-3 THE IONOSPHERE

Description — Since a sky wave leaving the transmitting antenna has to travel upward with respect to the earth's surface, it would simply continue out into space if its path were not bent sufficiently to bring it back to the earth. The medium which causes such bending is the *ionosphere*, a region in the upper atmosphere where free ions and electrons exist in sufficient quantity to cause a change in the refractive index. Ultraviolet radiation from the sun is considered to be responsible for the ionization. The ionosphere is not a single region but consists of a series of "layers" which occur at different heights, each layer consisting of a central region of ionization which tapers off in intensity both above and below.

Refraction, absorption, reflection — For a given intensity of ionization the amount of refraction becomes less as the frequency of the wave becomes higher (shorter wavelength). The bending is therefore smaller at high than at low frequencies, and if the frequency is raised to a high-enough value the bending eventually will become too slight to bring the wave back to earth, even when it enters the ionosphere at a very small angle to the "edge" of the ionized zone. At this and higher frequencies long-distance communication becomes impossible.

The greater the intensity of ionization the greater the bending on a given frequency. Thus an increase in ionization increases the maximum frequency which can be bent sufficiently for long-distance communication. The wave loses some energy in the ionosphere, and this energy loss increases with ionization density and the wavelength. Unusually high ionization may cause complete absorption of the wave energy, especially when the ionization is high in the lower regions of the ionosphere and below the lowest normally-useful layer. When the wave is absorbed in the ionosphere it is no more useful for communication than if it had passed through without sufficient bending to bring it back to earth.

In addition to refraction, reflection may take place at the lower boundary of a layer, if that boundary is well-defined; i.e., if there is an appreciable change in ionization within a relatively short interval of distance. For waves approaching the layer at or near the perpendicular, the change in ionization must take place within a difference in height comparable to the wavelength, hence reflection is more apt to occur at longer wavelengths (lower frequencies).

Critical frequency — When the frequency is low enough, a wave sent vertically upward to the ionosphere will be bent sufficiently to return to the transmitting point. The highest frequency at which this occurs, for a given state of the ionosphere, is called the *critical frequency*. It serves as an index for transmission conditions, although it is not the highest *useful* frequency since waves which enter the ionosphere at smaller angles than 90 degrees (vertical) will be bent sufficiently to return to earth. The maximum usable frequency, for waves leaving the earth at very small angles to the horizontal, is in the vicinity of three times the critical frequency.

Besides being directly observable, the critical frequency is of more practical interest than ionization density because it includes the effects of absorption as well as refraction.

Virtual height — Although a layer is a region of considerable depth, it is convenient to assign to it a definite height, called the *virtual height*. The virtual height is the height from

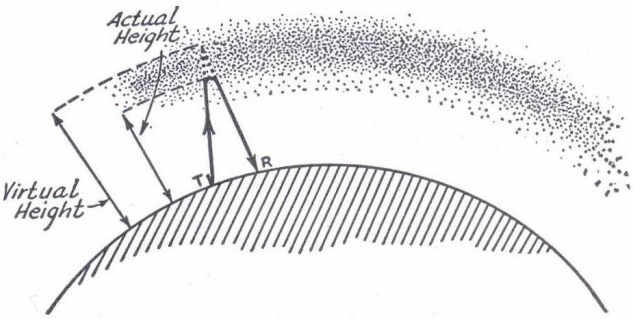

Fig. 902 — **Bending in the ionosphere and method of determining virtual height.**

which a pure reflection would give the same effect as the refraction which actually takes place. This is illustrated in Fig. 902. The wave traveling upward is bent back over a path having appreciable radius of turning, and a measurable interval of time is consumed in the turning process. The virtual height is then the

height of the triangle formed as shown, having equal sides of a total length equivalent to the actual time taken for the wave to travel from *T* to *R*.

The E layer — The lowest normally-useful layer is called the *E* layer. Its average height (maximum ionization) is about 70 miles. The ionization density is greatest around local noon, and the layer is only weakly ionized at night when the radiation from the sun is not present. This is because the air at this height is sufficiently dense so that free ions and electrons very quickly meet and recombine.

The F, F_1 and F_2 layers — The second principal layer is the *F*, which is at a height of about 175 miles at night. In this region the air is so thin that recombination of ions and electrons takes place very slowly, since the particles can travel relatively great distances before meeting. The ionization decreases after sundown, reaching a minimum just before sunrise. In the daytime the *F* layer splits into two layers, the F_1 and F_2, at average virtual heights of about 140 miles for the F_1 and around 200 miles for the F_2. These are most highly ionized at about local. noon, and merge again at sunset into the *F* layer.

Seasonal effects — In addition to day and night variations, there are also seasonal changes in the ionosphere as the quantity of radiation received from the sun changes. Thus the *E* layer has higher critical frequencies in the summer (about 4 Mc., average, in daytime) than in the winter, when the critical frequency is near 3 Mc. The *F* layer shows little variation, the critical frequency being of the order of 4 to 5 Mc. in the evening. The F_1 layer, which has a critical frequency in the neighborhood of 5 Mc. in summer, usually disappears in winter. The critical frequencies are highest in the F_2 layer in winter (11 to 12 Mc.) and lowest in summer (around 7 Mc.). The virtual height of the F_2 layer is also less in winter (around 185 miles) than in summer (average 250 miles).

In the spring and fall a transition period occurs, and conditions in the ionosphere are more variable at these times of the year.

Sunspot cycles — The critical frequencies mentioned in the preceding paragraph are mean values, since the ionization also varies with the 11-year sunspot cycle, being higher during times of greatest sunspot activity. Critical frequencies are highest during sunspot maxima and lowest during sunspot minima. The *E* critical frequency does not change greatly, but the *F* and F_2 critical frequencies change in a ratio of about 2 to 1.

Magnetic storms and other disturbances — Unusual disturbances in the earth's magnetic field (magnetic storms) usually are accompanied by disturbances in the ionosphere, when the layers apparently break up and expand. There is usually also an increase in absorption during such a period. Radio transmission is poor and there is a drop in critical frequencies so that lower frequencies must be used for communication. A storm may last for several days.

Unusually high ionization in the region of the atmosphere below the normal ionosphere may increase absorption to such an extent that sky-wave transmission becomes impossible on high frequencies. The length of such a disturbance may be several hours, with a gradual falling off of transmission conditions at the beginning and an equally gradual building up at the end of the period. *Fadeouts*, similar to the above in effect, are caused by sudden disturbances on the sun. They are characterized by very rapid ionization, with sky-wave transmission disappearing almost instantly, occur only in daylight, and do not last as long as the first type of absorption.

• 9-4 THE SKY WAVE

Wave angle (angle of radiation) — The smaller the angle at which the wave leaves the earth, the smaller the bending required in the ionosphere to bring it back and, in general, the greater the distance between the point where it leaves the earth and that at which it returns (§ 9-3). This is shown in Fig. 903. The vertical angle which the wave makes with a tangent to the earth is called the *wave angle*, or *angle of radiation*, the latter term being used more in connection with transmitting than receiving.

Skip distance — Since more bending is re-

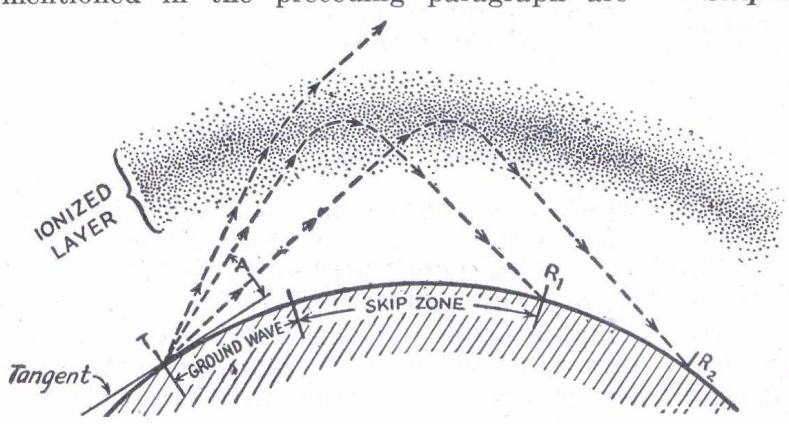

Fig. 903 — Refraction of sky waves, showing critical wave angle and skip zone.

quired to return the wave to earth when the wave angle is high, it is found that at high frequencies the refraction frequently is not great enough to give the required bending unless the wave angle is smaller than a certain angle called the *critical angle*. This is shown in Fig. 903, where wave angles A and lower give useful signals, but waves sent at higher angles travel through the layer and do not return. The distance between T and R_1 is therefore the shortest possible distance over which sky-wave communication can be carried on. The area between the end of the useful ground wave and the beginning of sky-wave reception is called the *skip zone*. The skip distance depends upon the frequency and the state of the ionosphere and is greater the higher the transmitting frequency and the lower the critical frequency (§ 9-3). It also depends upon the height of the layer in which the refraction takes place, the higher layers giving longer distances for the same wave angle. The wave angles at the transmitting and receiving points are usually, although not necessarily, approximately the same for a given wave path.

It is readily possible for the sky wave to pass through the E layer and be refracted back to earth from the F, F_1 or F_2 layers. This is because the critical frequencies are higher in the latter layers, so that a signal too high in frequency to be returned by the E layer can still come back from the F_1, F_2 or F, depending upon the time of day and the conditions existing. Depending upon the wave angle and frequency, it is also possible to have communications via either the E or F_1-F_2 layers on the same frequency.

Multi-hop transmission — On returning to earth the wave can be reflected (§ 9-1) upward and travel again to the ionosphere where refraction once more takes place, again with bending back to the earth. This process, which can be repeated several times, is necessary for transmission over great distances because of the limited heights of the layers and the curvature of the earth, since at the lowest useful wave angles (of the order of a few degrees, waves at smaller angles generally being absorbed rapidly at high frequencies by being in contact with the earth) the maximum one-hop distance is about 1250 miles with refraction from the E layer, and around 2500 miles from the F_2 layer. Ground losses absorb some of the energy from the wave on reflection, the amount of loss varying with the type of ground and being least for reflection from sea water. When the distance permits, it is better to have one hop rather than several, since the multiple reflections introduce losses which are higher than those caused by the ionosphere.

Multi-hop transmission is shown in Fig. 904, two- and three-hop paths being indicated.

Fading — Two or more parts of the wave may follow slightly different paths in traveling to the receiving point, in which case the difference in path lengths will cause a phase difference to exist between the wave components at the receiving antenna. The field strength may therefore have any value between the numerical sum of the components (when they are all in phase) and zero (when there are only two components and they are exactly out of phase). Since the paths change from time to time this causes a variation in signal strength called *fading*. Fading can also result from the combination of single-hop and multi-hop waves, or the combination of a ground wave and sky wave. The latter condition gives rise to an area of severe fading near the limiting distance of the ground wave, better reception being obtained at both shorter and longer distances where one component or the other is considerably stronger. Fading may be rapid or slow, the former type usually resulting from rapidly changing conditions in the ionosphere, the latter occurring when transmission conditions are relatively stable.

• 9-5 ULTRA-HIGH-FREQUENCY PROPAGATION

Direct ray — In the ultra-high frequency part of the spectrum (above 30 megacycles) the bending of the waves in the normal ionosphere layers is so slight that the sky wave (§ 9-4) does not ordinarily play any part in communication. The ground-wave (§ 9-2) range also is extremely limited because of high absorption in the ground at these frequencies. Normal u.h.f. transmission is by means of a *direct ray*, or wave traveling directly from the transmitter to the receiver through the atmosphere. Since the energy lost in ground absorption by a wave

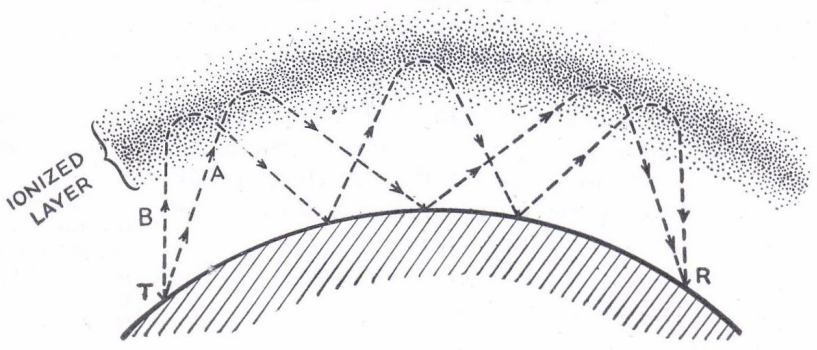

Fig. 904 — Multi-hop transmission.

traveling close to the ground decreases very rapidly with its height in wavelengths above ground, an ultra-high-frequency wave can be relatively close (in physical height) to the ground without suffering the absorption effects which would occur at the same physical heights on longer wavelengths.

Since the wave travels practically in a straight line, the maximum signal strength can be obtained only when there is an unobstructed atmospheric path between the transmitter and receiver. This means that the transmitting and receiving points should be sufficiently high to provide such a path, and on long paths the curvature of the earth must be taken into account as well as the intervening terrain.

Reflected ray — In addition to the direct ray, part of the wave strikes the ground between the transmitter and receiver and is reflected upward at a slight angle to produce a *reflected-ray* component at the receiver. This is shown in Fig. 905. The reflected ray is more or less out of phase with the direct ray, hence the net field strength at the receiving point is less than that of the direct ray alone. The canceling effect of the reflected ray depends upon the heights of the transmitter and receiver above the point of reflection, the ground losses when reflection takes place, and the frequency,

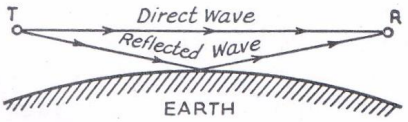

Fig. 905 — Direct and reflected waves in u.h.f. transmission.

decreasing with an increase in any of these factors.

Atmospheric refraction — There is normally some change in the refractive index of the air with height above ground, its nature being such as to cause the waves to bend slightly towards the ground. Where curvature of the earth must be considered, this has the effect of lengthening the distance over which it is possible to transmit a direct ray. It is convenient to consider the effect of this "normal" refraction as equivalent to an increase in the earth's radius in determining the transmitting and receiving heights necessary to provide a clear path for the wave. The equivalent radius, taking refraction into account, is 4/3 the actual radius.

Range vs. height — The height required to provide a clear path ("line of sight") over level ground from an elevated transmitting point to a receiving point on the surface, not including the effect of refraction, is

$$h = \frac{d^2}{1.51}$$

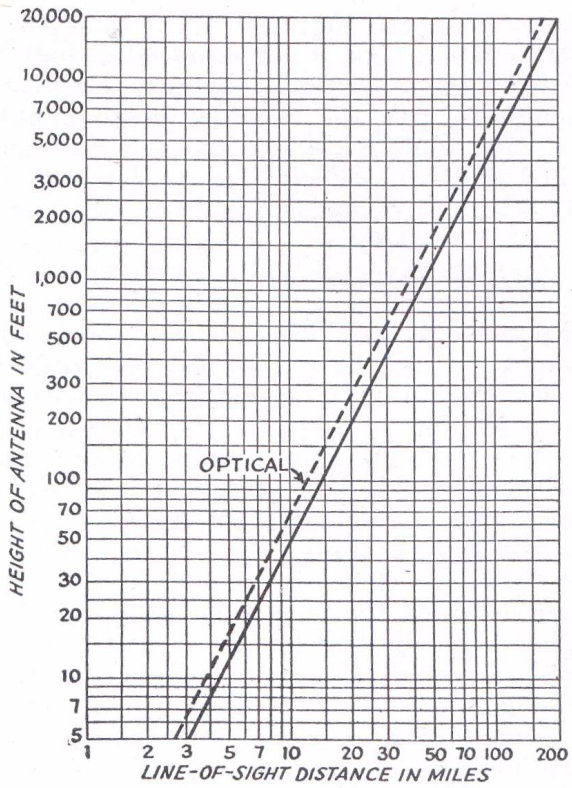

Fig. 906 — Chart for determining line-of-sight distance for u.h.f. transmission. Solid line includes effect of refraction, dotted line is the optical distance.

where h is the height in feet and d the distance in miles. Conversely, the line of sight distance in miles for a given height in feet is equal to $1.23\sqrt{h}$. Taking refraction into account, the latter equation becomes $1.41\sqrt{h}$. The graph of Fig. 906 gives the answer directly when one quantity is known.

When transmitter and receiver are both elevated the maximum direct ray distance to ground level as given by the formulas can be determined separately for each. Adding the two distances so obtained together will give the maximum distance by which they can be separated for direct-ray communication. This is shown in Fig. 907.

Diffraction — At distances beyond the direct-ray path, the wave is diffracted around the curvature of the earth. The diffracted wave is attenuated very rapidly, so that beyond the maximum direct-ray distance the signal strength decreases considerably faster

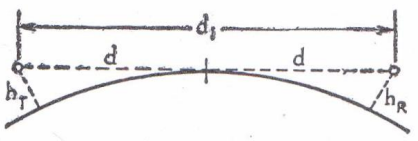

Fig. 907 — Method of determining total line-of-sight distance when both transmitter and receiver are elevated. Since only earth curvature is taken into account in Fig. 906, irregularities in the ground between the transmitting and receiving points must be considered for each actual path.

with distance than it does within the direct-ray path.

● 9-6 TROPOSPHERE REFRACTION

Temperature inversions — The refractive index of the lower atmosphere depends principally upon the temperature, moisture content and pressure. Of the three, only temperature differences cause a large enough change in refractive index to refract ultra-high frequency waves in such a way as to extend the distance range beyond the normal direct-ray and diffracted-wave ranges discussed in the preceding section. This occurs when there is a "temperature inversion," or a layer of warm air over cooler air near the ground. Temperature inversions are relatively frequent in the summer, and usually occur at heights from a few thousand feet to two miles or so above the ground.

Lower atmosphere bending — When there is a sufficiently marked temperature inversion; i.e., a rapid rise of temperature with height, a wave is refracted back to earth in much the same way as in the ionosphere, although the cause of the change in refractive index is different. The amount of bending is small compared to the bending in the ionosphere. Consequently the wave angle (§ 9-4) must be quite low (zero or nearly so), but since the bending takes place at a low altitude it is possible to extend the range of u.h.f. signals to several hundred miles when both transmitter and receiver are well below the line of sight.

Fig. 908 illustrates the conditions existing when the air is "normal" and when a temperature inversion is present. Since the bending is relatively small, it is advantageous to have as much height as possible at both the receiving and transmitting points, even though these heights may be considerably less than those necessary for "line of sight" transmission.

Frequency effects — The amount of bending is greater at longer wavelengths (lower frequencies) but is not usually observed at frequencies much below 28 Mc., partly because it is masked by other effects. The upper limit of frequency at which useful bending ceases is not known, but transmission by this means is frequent on 56 and 112 Mc.

● 9-7 SPORADIC-E IONIZATION

Description — Under certain conditions small regions or "patches" of unusually dense ionization may appear in the *E* layer of the ionosphere, for reasons not yet clearly understood. This is known as *sporadic E* ionization, and the change in refractive index in such a patch or cloud is frequently great enough to cause waves having frequencies as high as 60 Mc. to be bent back to earth. The dimensions of a sporadic *E* cloud are relatively small,

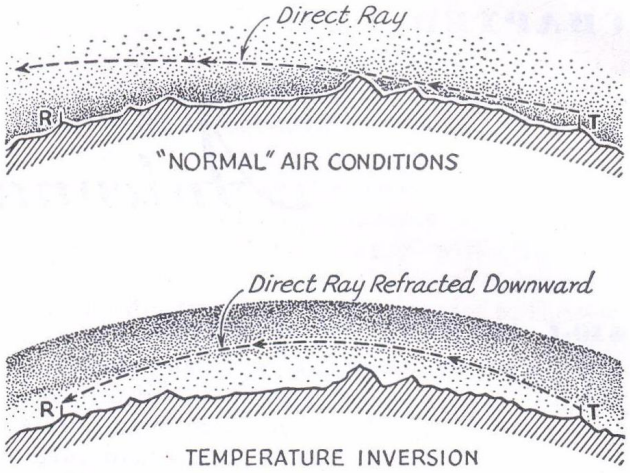

Fig. 908 — **Effect of a temperature inversion in extending the range of u.h.f. signals.**

hence communication by means of it is restricted to transmitting and receiving localities so situated with respect to the cloud and to each other that a refracted wave path is possible.

The abnormal ionization usually disappears in the course of a few hours. Sporadic *E* ionization is more frequent in the summer than winter, and may occur at any time of the day or night.

Transmission characteristics — Sporadic *E* refraction may take place at all frequencies up to the region of 60 megacycles. At the present time there are no known cases of such refraction on 112 Mc. When sporadic *E* ionization is present, skip distance is greatly reduced (when a wavepath via the cloud is possible to a given receiving location) on the frequencies where transmission is normally by means of the *F*, F_1 and F_2 layers; that is, from about 3.5 to 30 megacycles at night. The skip zone may in fact disappear entirely over most of the high-frequency spectrum, since the critical frequencies may rise to as high as 12 Mc. for sporadic *E*.

At ultra-high frequencies the bending is relatively small compared to lower frequencies, and only wave angles of the order of 5 degrees and less are useful in most cases. The transmitting and receiving points thus must be sufficiently distant from the cloud to enable a wave leaving the transmitter at such angles to strike it, and the cloud should be approximately on, and near the center of, the line joining the transmitter and receiver. Unless the ionization is extremely intense, the minimum distance of transmission on 56 Mc. is of the order of 800 miles and the maximum distance about 1250 miles.

Multi-hop transmission by means of two sporadic *E* clouds properly situated with respect to a transmitter and receiver is possible, but rather rare. Distances up to 2500 miles or so have been attained on 56 Mc. by this means.

CHAPTER TEN

Antenna Systems

●10-1 ANTENNA PROPERTIES

Wave propagation and antenna design — For most effective transmission, the propagation characteristics of the frequency under consideration must be given due consideration in selecting the type of antenna to use. These have been discussed in Chapter 9. On some frequencies the angle of radiation and polarization may be of relatively little importance; on others they may be all-important. On a given frequency, the type of antenna best suited for long-distance transmission may not be as good as a different type for shorter-range work.

The important properties of an antenna or antenna system are its polarization, angle of radiation, impedance, and directivity.

Polarization — The polarization of a straight-wire antenna is its position with respect to the earth. That is, a vertical wire transmits vertically polarized waves and a horizontal antenna generates horizontally polarized waves (§ 9-1). The wave from an antenna in a slanting position contains both vertical and horizontal components.

Angle of radiation — The wave angle (§ 9-4) at which an antenna radiates best is determined by its polarization, height above ground, and the nature of the ground. Radiation is not all at one well-defined angle, but rather is dispersed over a more or less large angular region, depending upon the type of antenna. The angle is measured in a vertical plane with respect to a tangent to the earth at the transmitting point.

Impedance — The impedance (§ 2-8) of the antenna at any point is the ratio of current to voltage at that point. It is important in connection with feeding power to the antenna, since it constitutes the load resistance represented by the antenna. At high frequencies it consists chiefly of radiation resistance (§ 2–12). It is understood to be measured at a current loop (§ 2–12) unless otherwise specified.

Directivity — All antennas radiate more power in certain directions than in others. This characteristic, called *directivity*, must be considered in three dimensions, since directivity exists in the vertical plane as well as in the horizontal plane. Thus the directivity of the antenna will affect the wave angle as well as the actual compass directions in which maximum transmission takes place.

Current — The field strength produced by an antenna is proportional to the current flowing in it. Since standing waves are generally present on an antenna, the parts of the wire carrying the higher current therefore have the greatest radiating effect.

Power gain — The ratio of power required to produce a given field strength with a "comparison" antenna, to the power required to produce the same field strength with a specified type of antenna is called the *power gain* of the latter antenna. It is used in connection with antennas intentionally designed to have directivity, and is measured in the optimum direction of the antenna under test. The comparison antenna is almost always a half-wave antenna having the same polarization as the antenna under consideration. Power gain is usually expressed in decibels (§ 3-3).

●10-2 HALF-WAVE ANTENNA

Physical and electrical length — The fundamental form of antenna is a single wire whose length is approximately equal to half the transmitting wave-length. It is the unit from which many more complex forms of antennas are constructed. It is sometimes known as a *Hertz* or *doublet* antenna.

The length of a half wave in space is

$$length\ (feet) = \frac{492}{Freq.\ (Mc.)} \qquad (1)$$

The actual length of a half-wave antenna will not be exactly equal to the half wavelength in space but is usually about 5% less, because of capacitance at the ends of the wire (*end effect*). The reduction factor increases slightly as the frequency is increased. Under average conditions, the following formula will give the length of a half-wave antenna to sufficient accuracy, for frequencies up to 30 Mc.

$$Length\ of\ half\text{-}wave\ antenna\ (feet) = \frac{492 \times 0.95}{Freq.\ (Mc.)} = \frac{468}{Freq.\ (Mc.)} \qquad (2)$$

At 56 Mc. and higher frequencies the somewhat larger end effects cause a slightly greater reduction in length, so that for these frequencies,

$$\textit{Length of half-wave antenna (feet)} = \frac{492 \times 0.94}{\textit{Freq. (Mc.)}} = \frac{462}{\textit{Freq. (Mc.)}} \quad (3)$$

$$\textit{or length (inches)} = \frac{5540}{\textit{Freq. (Mc.)}} \quad (4)$$

Current and voltage distribution — When power is fed to such an antenna the current and voltage vary along its length (§ 2-12). The distribution, which is practically a sine curve, is shown in Fig. 1001. The current is maximum at the center and nearly zero at the ends, while the opposite is true of the r.f. voltage.

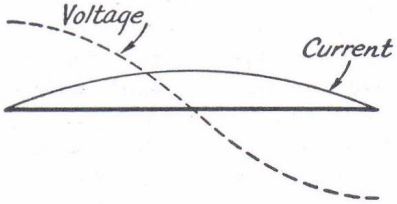

Fig. 1001 — Current and voltage distribution on a half-wave antenna.

The current does not actually reach zero at the current *nodes*, (§ 2-12) because of the end effect; similarly, the voltage is not zero at its node because of the resistance of the antenna, which consists of both the r.f. resistance of the wire (*ohmic resistance*) and the radiation resistance (§ 2-12). Usually the ohmic resistance of a half-wave antenna is small enough, in comparison with the radiation resistance, to be neglected for all practical purposes.

Impedance — The radiation resistance of a half-wave antenna in free space — that is, sufficiently removed from surrounding objects so that they do not affect the antenna's characteristics — is 73 ohms, approximately. The value under practical conditions will vary with the height of the antenna, but is commonly taken to be in the neighborhood of 70 ohms. It is pure resistance, and is measured at the center of the antenna. The impedance is minimum at the center, where it is equal to the radiation resistance, and increases toward the ends (§ 10–1). The end value will depend on a number of factors such as the height, physical construction, and the position with respect to ground.

Conductor size — The impedance of the antenna also depends upon the diameter of the conductor in relation to its length. The figures above are for wires of practicable sizes. If the diameter of the conductor is made large, of the order of 1% or more of the length, the impedance at the center will be raised and the impedance at the ends decreased. This increase in center impedance (of the order of 50% for a diameter/length ratio of 0.025) is accompanied by a decrease in the *Q* (§ 2-10, 2-12) of the antenna, so that the resonance curve is less sharp. Hence the antenna is capable of working over a wider frequency range. The effect is greater as the diameter/length ratio is increased, and is a property of some importance at ultra-high frequencies where the wavelength is small.

Radiation characteristics — The radiation from a half-wave antenna is not uniform in all directions but varies with the angle with respect to the axis of the wire. It is most intense in directions at right-angles to the wire, and zero along the direction of the wire itself, with intermediate values at intermediate angles. This is shown by the sketch of Fig. 1002, which represents the radiation pattern in free space. The relative intensity of radiation is proportional to the length of a line drawn from the center of the figure to the perimeter. If the antenna is vertical, as shown in the figure, then the field strength (§ 9-1) will be uniform in all horizontal directions; if the antenna is horizontal, the relative field strength will depend upon the direction of the receiving point with respect to the direction of the antenna wire.

• 10-3 GROUND EFFECTS

Reflection — When the antenna is near the ground the free-space pattern of Fig. 1002 is modified by reflection of radiated waves from the ground, so that the actual pattern is the resultant of the free-space pattern and ground reflections. This resultant is dependent upon the height of the antenna, its position or orientation with respect to the surface of the ground, and the electrical characteristics of the ground. The reflected waves may be in such phase relationship to the directly-radiated

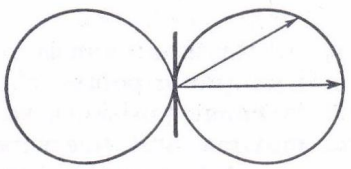

Fig. 1002 — Free-space radiation pattern of half-wave antenna. The antenna is shown in the vertical position. This is a cross-section of the solid pattern described by the figure when rotated on its axis (the antenna). The "doughnut" form of the solid pattern can easily be visualized by imagining the drawing glued to cardboard, with a short length of wire fastened on to represent the antenna. Then twirling the wire will give a visual representation of the solid pattern.

waves that the two completely reinforce each other, or the phase relationship may be such that complete cancellation takes place. All intermediate values also are possible. Thus the effect of a perfectly-reflecting ground is such that the original free-space field strength may be multiplied by a factor which has a maximum value of 2, for complete reinforcement, and having all intermediate values to zero, for complete cancellation. Since waves are always reflected upward from the ground (assuming

that the surface is fairly level) these reflections only affect the radiation pattern in the vertical plane — that is, in directions upward from the earth's surface — and not in the horizontal plane, or the usual geographical directions.

Fig. 1003 shows how the multiplying factor varies with the vertical angle for several representative heights for horizontal antennas. As the height is increased the angle at which complete reinforcement takes place is lowered until it occurs at a vertical angle of 15 degrees for a height equal to one wavelength. At still greater heights not shown on the chart the first maximum will occur at still smaller angles.

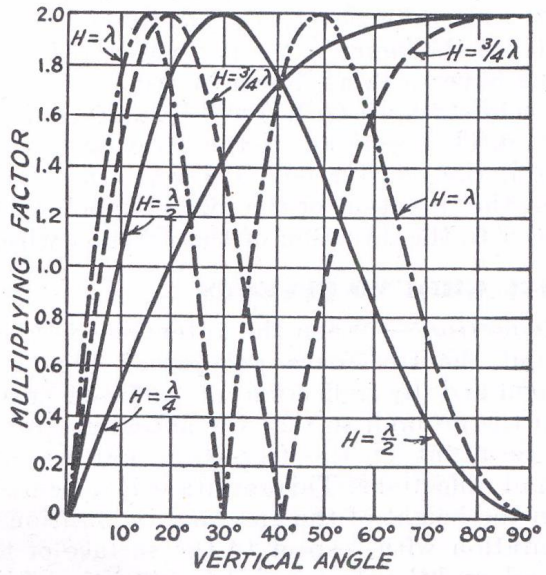

Fig. 1003 — Effect of ground on radiation at vertical angles for four antenna heights. This chart applies only to horizontal antennas, and is based on perfectly conducting ground.

When the half-wave antenna is vertical the maximum and minimum points in the curves of Fig. 1003 exchange positions, so that the nulls become maxima, and vice versa. In this case, the height is taken as the distance from ground to the center of the antenna.

Radiation angle — The vertical angle, or angle of radiation, is of primary importance, especially at the higher frequencies (§ 9-4, 9-5). It is therefore advantageous to erect the antenna at a height which will take advantage of ground reflection in such a way as to reinforce the space radiation at the most desirable angle. Since low radiation angles usually are desirable, this generally means that the antenna should be high; at least ½ wavelength at 14 Mc. and preferably ¾ or 1 wavelength; at least 1 wavelength and preferably higher at 28 Mc. and the ultra-high frequencies. The physical height decreases as the frequency is increased so that good heights are not impracticable; a half wavelength at 14 Mc. is only 35 feet, approximately, and the same height represents a full wavelength at 28 Mc. At 7 Mc. and lower, the higher radiation angles are effective so that again a reasonable antenna height is not difficult of attainment. Heights between 35 and 70 feet are suitable for all bands, the higher figures generally being preferable if circumstances permit their use.

Imperfect ground — Fig. 1003 is based on a ground having perfect conductivity, which is not met with in practice. The principal effect of actual ground is to make the curves inaccurate at the lowest angles; appreciable high-frequency radiation at angles smaller than a few degrees is practically impossible to obtain at heights of less than several wavelengths. Above 15 degrees, however, the curves are accurate enough for all practical purposes, and may be taken as indicative of the sort of result to be expected at angles between 5 and 15 degrees.

The effective ground plane — that is, the plane from which ground reflections can be considered to take place — seldom is the actual surface of the ground but is a few feet below it, depending upon the character of the soil.

Impedance — Waves which are reflected directly upward from the ground induce a current in the antenna in passing and, depending on the antenna height, the phase relationship of this induced current to the original current may be such as either to increase or decrease the total current in the antenna. For the same power input to the antenna, an increase in current is equivalent to a decrease in impedance, and vice versa. Hence the impedance of the antenna varies with height. The theoretical curve of variation of radiation resistance for an antenna above perfectly-reflecting ground is shown in Fig. 1004. The impedance approaches the free-space value as the height becomes large, but at low heights may differ considerably from it.

Choice of polarization — Polarization of the transmitting antenna is generally unimportant on frequencies between 3.5 and 30 Mc.

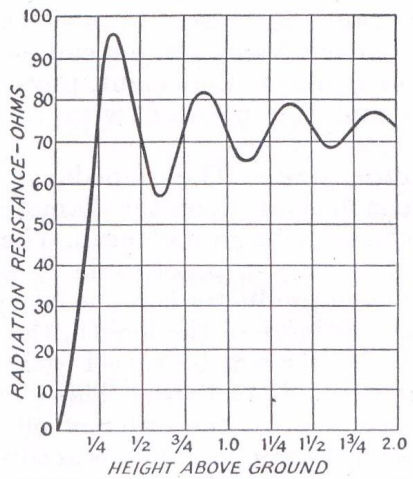

Fig. 1004 — Radiation resistance of a half-wave horizontal antenna as a function of height above perfectly-reflecting ground.

However, the question of whether the antenna should be installed in a horizontal or vertical position deserves consideration on other counts. A vertical half-wave antenna will radiate equally well in all *horizontal* directions, so that it is substantially non-directional in the usual sense of the word. If installed horizontally, however, the antenna will tend to show directional effects, and will radiate best in the direction at right-angles, or broadside, to the wire. The radiation in such a case will be least in the direction toward which the wire points. This can be seen readily by imagining that Fig. 1002 is lying on the ground and that the pattern is looked at from above.

The vertical angle of radiation also will be affected by the position of the antenna. If it were not for ground losses at high frequencies, the vertical half-wave antenna would be preferred because it would concentrate the radiation horizontally. Practically, this theoretical advantage over the horizontal antenna is of little or no consequence.

At 1.75 Mc. vertical polarization will give more low-angle radiation, and hence is better for long-distance transmission; at this frequency the ground wave also is useful and must be vertically polarized. On ultra-high frequencies, direct-ray and lower troposphere transmission require the same type of polarization at both receiver and transmitter, since the waves suffer no appreciable change in polarization in transmission (§ 9-5, 9-6). Either vertical or horizontal polarization may be used, the latter being slightly better for longer distances.

Effective radiation patterns — In determining the radiation pattern it is necessary to consider radiation in both the horizontal and vertical planes. When the half-wave antenna is vertical, the vertical angle of radiation chosen does not affect the *shape* of the horizontal pattern, but only its relative amplitude. When the antenna is horizontal, however, both the shape and amplitude are dependent upon the angle of radiation chosen.

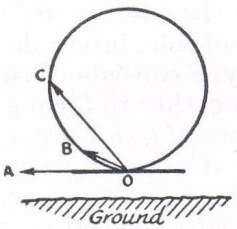

Fig. 1005 — **Illustrating the importance of vertical angle of radiation in determining antenna directional effects. Ground reflection is neglected in this drawing.**

Fig. 1005 illustrates this point. The "free-space" pattern of the horizontal antenna shown is a section cut vertically through the solid pattern. In the direction *OA*, horizontally along the wire axis, the radiation is zero. At some vertical angle represented by the line *OB*, however, the radiation is appreciable, despite the fact that this line runs *in the same geographical direction* as *OA*. At some higher angle *OC* the radiation, *still in the same geographical direction*, is still more intense. The effective radiation pattern therefore depends upon the angle of radiation most useful and for long-distance transmission is dependent upon the conditions existing in the ionosphere. These conditions may vary not only from day to day and hour to hour, but even from minute to minute. Obviously, then, the effective directivity of the antenna will change along with transmission conditions.

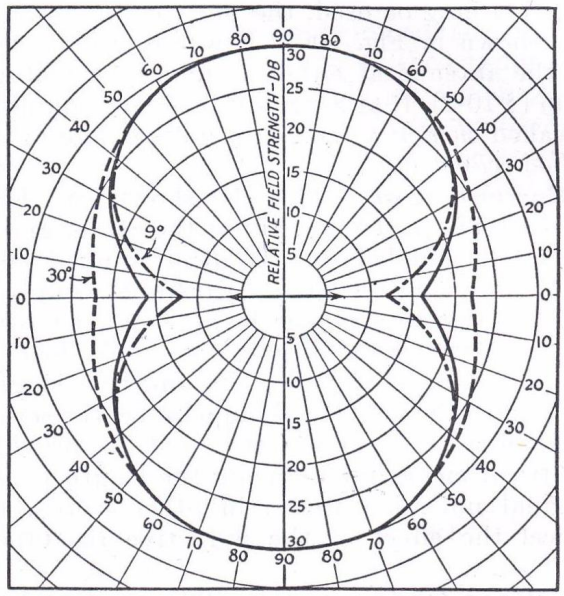

Fig. 1006 — **Horizontal pattern of a horizontal half-wave antenna at three vertical radiation angles. Solid line is relative radiation at 15 degrees. Dotted lines show deviation from the 15-degree pattern, for angles of 9 and 30 degrees. The patterns are useful for shape only, since the amplitude will depend upon the height of the antenna above ground and the vertical angle considered. The patterns for all three angles have been proportioned to the same scale, but this does not mean that the maximum amplitudes necessarily are the same. The arrow indicates the direction of the antenna wire.**

At ultra-high frequencies, where only extremely low angles are useful for any but sporadic-E transmission (§ 9-7) the effective radiation pattern of the antenna approaches the free-space pattern. A horizontal antenna therefore shows more marked directive effects than it does at lower frequencies, on which high radiation angles are effective.

Theoretical horizontal-directivity patterns for half-wave horizontal antennas at vertical angles of 9, 15, and 30 degrees (representing average useful angles at 28, 14 and 7 Mc. respectively) are given in Fig. 1006. At intermediate angles the values in the affected regions also will be intermediate. Relative field strengths are plotted on a decibel scale (§ 3-3) so that they represent as nearly as possible the actual aural effect at the receiving station.

•10-4 APPLYING POWER TO THE ANTENNA

Direct excitation — When power is transferred directly from the source to the radiating antenna, the antenna is said to be directly excited. While most of the coupling methods (§ 2-11) may be used, the more common ones are shown in Fig. 1007. Power is usually fed to the antenna at either a current or voltage loop (§ 10-2). If at a current loop, the coupling is called *current feed;* if at a voltage loop, it is called *voltage feed.*

Current feed — This is shown in Fig. 1007-A. The antenna is cut at the center and a small coil coupled to the output tank circuit of the transmitter, with adjustable coupling so that the transmitter loading can be controlled. Since the addition of the coil "loads" the antenna, or increases its effective length because of the additional inductance, the series condensers C_1 and C_2 are used to provide electrical means for reducing the length to its original unloaded value; in other words, to cancel the effect of the inductive reactance (§ 2-10).

Voltage feed — In Fig. 1007 at B and C the power is introduced into the antenna at a point of high voltage. In B the end of the antenna is coupled to the output tank circuit through a small condenser; in C a separate tank, connected directly to the antenna, is used. This tank is tuned to the transmitter frequency and should be grounded at one end or at the center of the coil, as shown.

Adjustment of coupling — Methods of tuning and adjustment correspond to those used with transmission lines and are discussed in § 10-6.

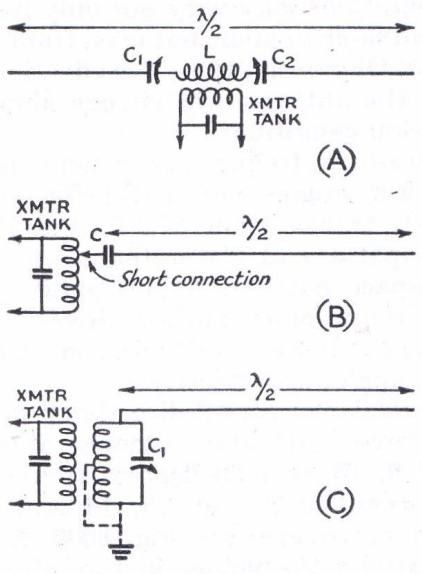

Fig. 1007 — Methods of direct feed to the half-wave antenna. *A*, current feed, series tuning; *B*, voltage feed, capacity coupling; *C*, voltage feed with inductively coupled antenna tank. In *A*, the coupling apparatus is not included in the antenna length.

Disadvantages of direct excitation — Direct excitation is seldom used except on the lowest amateur frequencies because it involves bringing the antenna proper into the operating room and hence into close relationship with the house and electric wiring. This usually means that some of the power is wasted in heating poor conductors in the field of the antenna. Also, it usually means that the shape of the antenna must be distorted so that the expected directional effects are not realized, and likewise means that the height is limited. For these reasons, in high-frequency work practically all amateurs use transmission lines or feeder systems which permit putting the antenna in a desirable location.

•10-5 TRANSMISSION LINES

Requirements — A transmission line is used to transfer power, with a minimum of loss, from its source to the device in which the power is to be usefully expended. At radio frequencies, where every wire carrying r.f. current tends to radiate energy in the form of electromagnetic waves, special design is necessary to minimize radiation and thus cause as much as possible of the power to be delivered to the receiving end of the line.

Radiation can be minimized by using a line in which the current is low, and by using two conductors carrying currents of equal magnitudes but opposite phase so that the fields about the conductors cancel each other. For good cancellation of radiation the two conductors should be parallel and quite close to each other.

Types — The most common form of transmission line consists of two parallel wires, maintained at a fixed spacing of two to six inches by insulating spacers or spreaders at suitable intervals (*open-wire line*). A second type consists of rubber-insulated wires twisted together to form a flexible line without spacers (*twisted-pair line*). A third uses a wire inside and coaxial with a tubing outer conductor, separated from the outer conductor by insulating spacers or "beads" at regular intervals (*coaxial* or *concentric line*). A variation of this type uses solid rubber insulation between the inner and outer conductors, the latter usually being made of metal braid rather than solid tubing so that the line will be flexible. Still another type of line uses a single wire alone, without a second conductor (*single-wire feeder*); in this case radiation is minimized by keeping the line current low.

Spacing of two-wire lines — The spacing between wires of an open-wire line should be small in comparison to the operating wavelength to prevent appreciable radiation. At the same time it is impracticable to make the spacing too small because when the wires

swing with respect to each other in a wind the line constants (§ 2-12) will vary and thus cause a variation in tuning or loading on the transmitter. It is also desirable to use as few insulating spacers as possible to keep the weight of the line to a minimum. In practice a spacing of about six inches is used for 14 Mc. and lower frequencies, with four and two inch spacing being common on the ultra-high frequencies.

Balance to ground — For maximum cancellation of the fields about the two wires it is necessary that the currents be equal in amplitude and opposite in phase. Should the capacity or inductance per unit length in one wire differ from that in the other this condition cannot be fulfilled. Insofar as the line itself is concerned, the two wires will have identical characteristics only when the two have exactly the same physical relationships to ground and to other objects in the vicinity. Thus the line should be symmetrically constructed and the two wires should be at the same height. Line unbalance can be minimized by keeping the line as far above ground and as far from other objects as possible.

To overcome unbalance the line is sometimes transposed, which means that the positions of the wires are interchanged at regular intervals (Fig. 1008). This is more helpful on long than

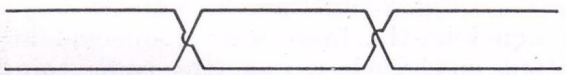

Fig. 1008 — **Method of transposing a two-wire open transmission line to preserve balance to ground and nearby objects.**

on short lines, and usually need not be resorted to for lines less than a wavelength or two long.

Characteristic impedance — The square root of the ratio of inductance to capacity per unit length of the line is called the *characteristic* or *surge impedance.* It is the impedance which a long line would present to an electrical impulse induced in the line, and is important in determining the operation of the line in conjunction with the apparatus to which it is connected.

The characteristic impedance of air-insulated transmission lines may be calculated from the following formulas:

Parallel-conductor line

$$Z = 276 \log \frac{b}{a} \qquad (5)$$

where Z is the surge impedance, b the spacing, center to center, and a the radius of the conductor. The quantities b and a must be measured in the same units (inches, etc.). Surge impedance as a function of spacing for lines using conductors of different size is plotted in chart form in Fig. 1009.

Coaxial or concentric line

$$Z = 138 \log \frac{b}{a} \qquad (6)$$

where Z again is the surge impedance. In this case b is the *inside diameter* (not radius) of the outer conductor and a is the *outside diameter* of the inner conductor. The formula is true for air dielectric, and approximately so for a line having ceramic insulators so spaced that the major proportion of the insulation is air.

When a solid insulating material is used between the conductors the impedance decreases, because of the increase in line capacity, by the factor $1/\sqrt{k}$, where k is the dielectric constant of the insulating material.

The impedance of a single-wire transmission line varies with the size of the conductor, its

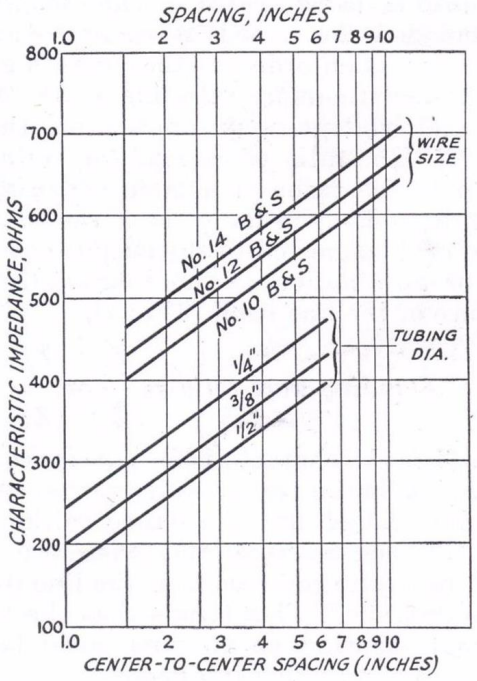

Fig. 1009 — **Characteristic impedances of typical spaced-conductor transmission lines. Use outside diameter of tubing.**

height above ground, and orientation with respect to ground. An average figure is about 500 ohms.

Electrical length — The electrical length of a line is not exactly the same as its physical length for reasons corresponding to the end effects in antennas. (§ 10-2). Spacers used to separate the conductors have dielectric constants larger than that of air, so that the waves do not travel quite as fast along a line as they would in air. The lengths of electrical quarter waves of various types of lines can be calculated from the formula

$$Length\ (feet) = \frac{246 \times V}{Freq.\ (Mc.)} \qquad (7)$$

where V depends upon the type of line. For lines of ordinary construction, V is as follows:

Parallel wire line	$V = 0.975$
Parallel tubing line	$V = 0.95$
Concentric line (air-insulated)	$V = 0.85$
Concentric line (rubber-insulated)	$V = 0.56$–0.65
Twisted pair	$V = 0.56$–0.65

Input and output ends — The input end of a line is that connected to the source of power; the output end is that connected to the power-absorbing device. When a line connects a transmitter to an antenna, the input end is at the transmitter and the output end at the antenna; with the same line and antenna connected to a receiver, however, the energy flows from the antenna to the receiver, hence the input end of the line is at the antenna and the output end at the receiver.

Standing-wave ratio — The lengths of transmission lines used at radio frequencies are of the same order as the operating wave lengths and therefore standing waves of current and voltage may appear on the line (§ 2–12). The ratio of current (or voltage) at a loop to the value at a node (*standing-wave ratio*) depends upon the ratio of the resistance of the load connected to the output end of the line, or termination, to the characteristic impedance of the line itself. That is,

$$Standing\text{-}wave\ ratio = \frac{Z_s}{Z_t}\ or\ \frac{Z_t}{Z_s} \qquad (8)$$

where Z_s is the characteristic impedance of the line and Z_t is the terminating resistance, Z_t is generally called an impedance, although it must be non-reactive and therefore correspond to a pure resistance for the line to operate as described. This means that the load or termination, when an antenna, must be resonant at the operating frequency.

The formula is given in two ways because it is customary to put the larger number in the numerator so that the ratio will not be fractional. As an example, a 600-ohm line terminated in a resistance of 70 ohms will have a standing wave ratio of 600/70, or 8.57. The ratio on a 70-ohm line terminated in a resistance of 600 ohms would be the same. This means that if the current as measured at a node is 0.1 amp., the current at a loop will be 0.857 amp.

A line terminated in a resistance equal to its characteristic impedance is equivalent to an infinitely long line, consequently there is no reflection and no standing waves appear. The standing wave ratio therefore is 1. The input end of such a line appears as a pure resistance of a value equal to the characteristic impedance of the line.

Reactance, resistance, impedance — The input end of a line may show reactance as well as resistance, and the values of these quantities will depend upon the nature of the load at the output end, the electrical length of the line, and the line characteristic impedance. The reactance and resistance are important in determining the method of coupling to the source of power. Assuming that the load at the output end of the line is purely resistive, which is essentially the case since the load circuit is usually tuned to resonance, a line less than a quarter wavelength long electrically will show inductive reactance at its input terminals when the output termination is *less* than the characteristic impedance, and capacitive reactance when the termination is *higher* than the characteristic impedance. If the line is more than a quarter wave but less than a halfwave long the reverse conditions exist. With still longer lengths the reactance characteristics reverse in each succeeding quarter wavelength. The input impedance is purely resistive if the line is an exact multiple of a quarter wave in length. The reactance at intermediate lengths is higher the greater the standing wave ratio, being zero for a ratio of 1.

Impedance transformation — Regardless of the standing-wave ratio, the input impedance of a line a half-wave long electrically will be equal to the impedance connected at its output end. Such a line (the same thing is true of a line any integral multiple of a half-wave in length) can be considered to be a one-to-one transformer. However, if the line is a quarter-wave (or an odd multiple of a quarter wave) long the input impedance will be equal to

$$Z_i = \frac{Z_s^2}{Z_t}$$

where Z_s is the characteristic impedance of the line and Z_t the impedance connected to the output end. A quarter-wave line therefore can be used as an *impedance transformer*, and by suitable selection of constants a wide range of input impedance values can be obtained. Furthermore, the impedance measured between the two conductors anywhere along the line will vary between the two end values, so that any intermediate impedance value can be selected. This is a particularly useful property since a quarter-wave line may be short-circuited at one end (§ 2-12) and used as a *linear transformer* with adjustable impedance ratio.

Losses — Air-insulated lines operate at quite high efficiency. Parallel-conductor lines average 0.12 to 0.15 db. (§ 3-3) loss per wavelength of line. These figures hold only if the

standing wave ratio is 1. The losses increase with the standing-wave ratio, rather slowly up to a ratio of 15 to 1, but rapidly thereafter. For standing-wave ratios of 10 or 15 to 1 the increase is inconsequential provided the line is well balanced.

Concentric lines with air insulation are excellent when dry, but losses increase if there is moisture in the line. Provision therefore should be made for making such lines airtight, and they should be thoroughly dry when assembled. This type of line has the least radiation loss. The small lines (⅜-inch outer conductor) should not be used at high voltages, hence it is desirable to keep the standing-wave ratio down.

Good quality rubber insulated lines, both twisted pair and coaxial, average about 1 db. loss per wavelength of line. At the higher frequencies, therefore, such lines should be used only in short lengths if losses are important. These lines have the advantages of compactness, ease of installation, and flexibility. Ordinary lampcord has a loss of approximately 1.4 db. per wavelength, when dry, but its losses become excessive when wet. The parallel moulded-rubber type is best from the standpoint of withstanding wet weather. The characteristic impedance of lampcord is between 120 and 140 ohms.

The loss in db. is directly proportional to the length of the line. Thus a line which has a loss of 1 db. per wavelength will have an actual loss of 3 db. if the line is three wavelengths long. In the case of line losses, the length is not expressed in terms of electrical length but in physical length; that is, a wavelength of line, in feet, is equal to 984/Freq. (Mc.) for computing loss. This permits a direct comparison of lines having the same physical length. The electrical lengths, of course, may differ considerably.

Resonant and non-resonant lines — Lines are classified as *resonant* or *non-resonant* depending upon the standing-wave ratio. If the ratio is near 1, the line is said to be non-resonant. Reactive effects will be small and consequently no special tuning provisions need be made for cancelling them (§ 2-10) even when the line length is not an exact multiple of a quarter wavelength. If the standing-wave ratio is fairly large, the input reactance must be cancelled or "tuned out" unless the line is a multiple of a quarter wavelength, and the line is said to be resonant.

• 10-6 COUPLING TO TRANSMISSION LINES

Requirements — The coupling system between a transmitter and the input end of a transmission line must provide means for adjusting the load on the transmitter to the proper value (impedance matching) and for tuning out any reactive component that may be present (2-9, 2-10, 2-11). The resistance and reactance considered are those present *at the input end of the line*, and hence have nothing to do with the antenna itself except insofar as the antenna load may affect the operation of the line (§ 10-5).

Untuned coil — A simple system, shown in Fig. 1010-A, uses a coil of a few turns tightly coupled to the plate tank coil. Since no provision is made for tuning, this system is suitable only for non-resonant lines which show practically no reactance at the input end. Loading on the transmitter may be varied by varying the coupling between the tank inductance and *pickup coil*, as it is frequently called, or by changing the number of turns on the pickup coil. A slight amount of reactance is coupled into the tank circuit by the pickup coil, since the flux leakage (§ 2-11) is high, so that slight retuning of the plate tank condenser may be necessary when the load is connected.

Taps on tank circuit — A method suitable for use with open-wire lines is shown in Fig. 1010-B, where the line is tapped on a balanced tank circuit with taps equidistant from the center or ground point. This symmetry is necessary to maintain line balance to ground (§ 10-5). Loading is increased by moving the taps outward from the center. Any reactance present may be tuned out by readjustment of the plate tank condenser, but this method is not suitable for large values of reactance and therefore direct tapping is best confined to use with non-resonant lines.

Adjustment of untuned systems — Adjustment of either of the above systems is quite simple. Starting with loose coupling, apply power to the transmitter, and adjust the plate tank condenser to minimum plate current. If the current is less than the desired load value, increase the coupling and again resonate the plate condenser. Continue until the desired plate current is obtained, always keeping the plate tank condenser at the setting which gives minimum current.

Pi-section coupling — A coupling system which is electrically equivalent to tapping on the tank circuit, but using a capacity voltage divider in the plate tank circuit for the purpose, is shown in Fig. 1010-C. Since one side of the condenser across which the line is connected is grounded, some unbalance will be introduced into the transmission line. The method is used chiefly with low-power portable sets because it is readily adjustable to meet a fairly wide range of impedance values. A single-ended amplifier, either screen-grid or a grid-neutralized triode (§ 4-7) is required, since the plate tank circuit is not balanced. Coupling is adjusted by varying C_1, re-resonat-

ing the circuit each time by means of C_2, until the desired amplifier plate current is obtained. In general, the coupling will increase as C_1 is made smaller with respect to C_2. Relatively large-capacity condensers are required to give a suitable impedance-matching range while maintaining resonance.

Pi-section filter — The coupling circuit shown in Fig. 1010-D is a low-pass filter capable of coupling between a fairly wide range of impedances. The method of adjustment is as follows: First, with the filter disconnected from the transmitter tank, tune the transmitter tank to resonance, as evidenced by minimum plate current. Then, with trial settings of the clips on L_1 and L_2 (few turns for high frequencies, more for lower) tap the input clips on the final tank coil at points equidistant from the center so that about half the coil is included between them. A balanced tank circuit must be used. Set C_2 at about half scale, apply power, and rapidly rotate C_1 until the plate current drops to minimum. If this minimum is not the desired full-load plate current, try a new setting of C_2 and repeat. If, for all settings of C_2, the plate current is too high or too low, try new settings of the taps on L_1 and L_2, and also on the transmitter tank. Do not touch the tank condenser during these adjustments. When, finally, the desired plate current is obtained,

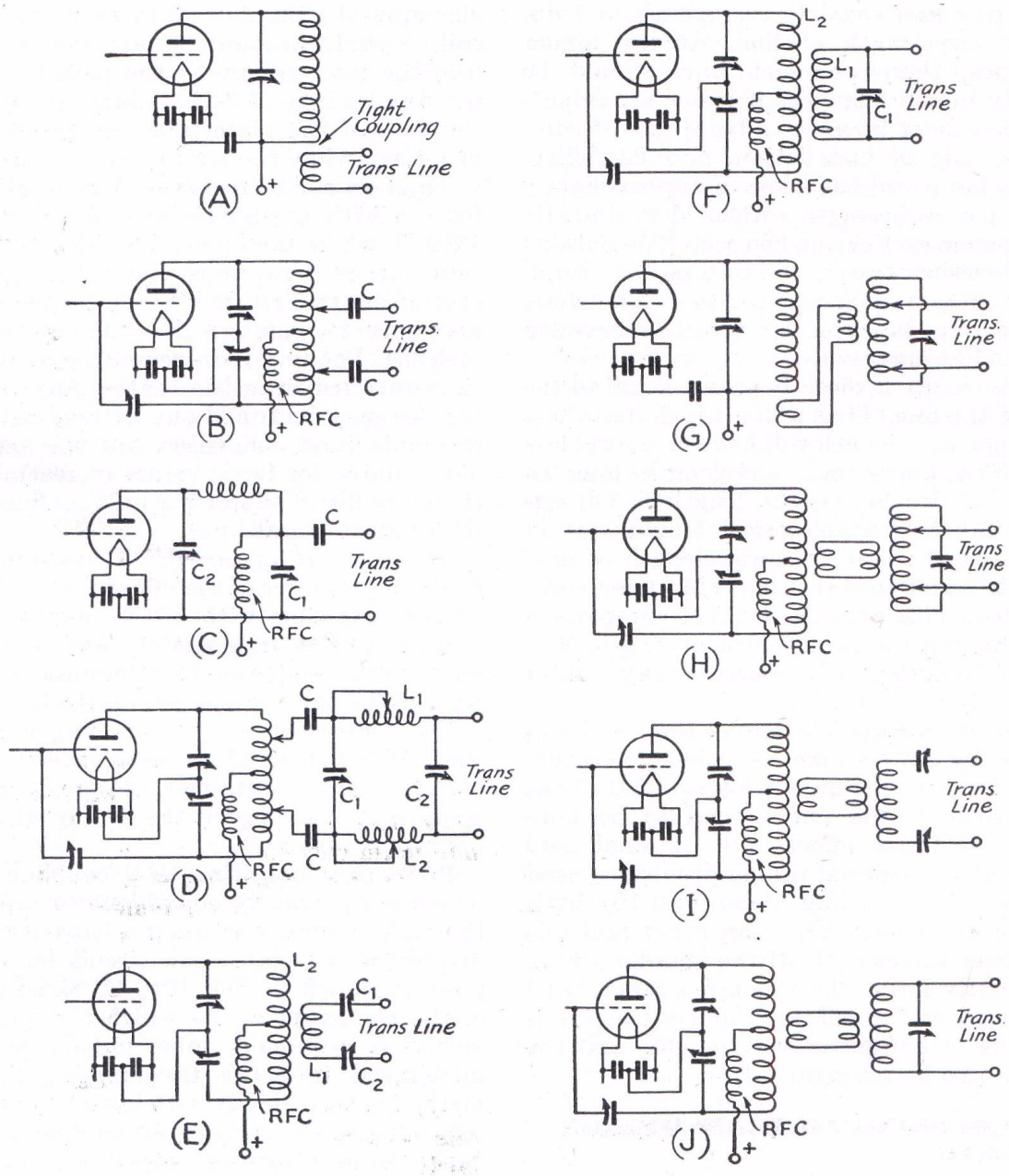

Fig 1010 — Methods of coupling the transmitter to the transmission line. Circuit values and adjustment are discussed in the text. Condensers marked "C" are fixed blocking condensers to isolate the transmitter plate voltage from the antenna; their capacity is not critical, 500 $\mu\mu$fd. to 0.002 μfd. being satisfactory values. Voltage rating should at least equal the plate voltage on the final stage.

set C_1 carefully to the exact minimum plate-current point. *This adjustment is important in minimizing harmonic output.*

With some lengths of resonant lines, particularly those not exact multiples of a quarter wavelength, it may be difficult to get proper loading with the pi-section coupler. Usually, these lengths also will be difficult to feed with other systems of coupling. In such cases, the proper loading often can be obtained by varying the L/C ratio of the filter over a considerably wider range than is used for normal loads.

Series tuning — When the input impedance of the line is low, the coupling method shown in Fig. 1010-E may be used. This system, known as *series tuning*, places the coupling coil, tuning condensers, and load all in series, and is particularly suitable for use with resonant lines when a current loop appears at the input end. Two tuning condensers, as shown, usually are used to keep the line balanced to ground, but one will suffice, the other end of the line being connected directly to the end of L_1.

The tuning procedure with series tuning is as follows: With C_1 and C_2 at minimum capacity, couple the antenna coil L_1 loosely to the transmitter output tank coil and observe the plate current. Then increase C_1 and C_2 simultaneously, until a setting is reached which gives maximum plate current, indicating that the antenna system is in resonance with the transmitting frequency. Readjust the plate tank condenser to minimum plate current. This is necessary because tuning the antenna circuit will have some effect on the tuning of the plate tank. The new minimum plate current will be higher than with the antenna system detuned, but should still be well below the rated value for the tube or tubes. Increase the coupling between L_1 and L_2 by a small amount, readjust C_1 and C_2 for maximum plate current, and again set the plate tank condenser to minimum. Continue this process until the minimum plate current is equal to the rated plate current for the amplifier. Always use the degree of coupling between L_1 and L_2 which will just bring the amplifier plate current to rated value when C_1 and C_2 pass through resonance. The r.f. ammeters should indicate maximum feeder current at the resonance setting; these meters are not strictly necessary, but are useful in indicating the relative power output from the transmitter.

Parallel tuning — When the line has high input impedance, parallel tuning, as shown in Fig. 1010-F, is required. Here the coupling coil, tuning condenser and line are all in parallel, the load represented by the line being directly across the tuned coupling circuit. If the line is non-reactive, the coupling circuit will be tuned independently to the transmitter frequency; line reactance can be compensated for by tuning of C_1 and adjustment, if necessary, of L_1 by means of taps. Parallel tuning is suited to resonant lines when a voltage loop appears at the input end.

The tuning procedure is quite similar to that with series tuning. Find the value of coupling between L_1 and L_2 which will bring the plate current to the desired value as C_1 is tuned through resonance. Again a slight readjustment of the amplifier tank condenser may be necessary to compensate for the effect of coupled reactance.

Link coupling — Where tuning of the circuit connected to the line is necessary or desirable, it is possible to separate physically the line-tuning apparatus and the plate tank circuit by means of link coupling (§ 2-11). This is often convenient from a constructional standpoint, and has the advantage that with proper construction there will be somewhat less harmonic transfer to the antenna since stray capacity coupling is lessened with the smaller link coils.

Figs. 1010-G and H show a method which can be considered to be a variation of Fig. 1010-B. The first (G) is suitable for use with a single-ended plate tank, the second (H) for a balanced tank. The auxiliary tank on which the transmission line is tapped may have adjustable inductance as well as capacity to provide a wide range of reactance variation for compensating for line reactance. The center of the auxiliary tank inductance may be grounded if desired. The link windings should be placed at the grounded parts of the coils to reduce capacity coupling and consequent harmonic transfer. With this inductively-coupled system the loading on the auxiliary tank circuit increases as the taps are moved outward from the center, but since this decreases the Q of the circuit the coupling to the plate tank simultaneously decreases (§ 2-11), hence a compromise adjustment giving proper loading must be found in practice. Loading also may be varied by changing the coupling between one link winding and its associated tank coil; either tank may be used for this purpose. When the auxiliary tank is properly tuned to compensate for line reactance the plate tank tuning will be practically the same as with no load on the circuit, hence the plate tank condenser need only be readjusted slightly to compensate for the small reactance introduced by the link.

Link coupling also may be used with series and parallel tuning, as shown in Figs. 1010-I and J. The coupling between one link and its associated coil may be made variable to give the same effect as changing the coupling between the plate tank and antenna coils in the ordinary system. The tuning procedure is the same as described above for series and parallel tuning. In the case of single-ended tank cir-

cuits, the input link would be coupled to the grounded end of the tank coil, similarly to the method in Fig. 1010-G.

Circuit values — The values of inductance and capacity to use in the antenna coupling system will depend upon the transmitting frequency, but are not particularly critical. With series tuning (Fig. 1010-E, I) the coil may consist of a few turns of the same construction as is used in the final tank; average values will run from one or two turns at ultra-high frequencies to perhaps 10 or 12 at 1.75 Mc. The number of turns preferably should be adjustable so that the inductance can be changed should it not be possible to reach resonance with the condensers used. The series condensers should have a maximum capacity of 250 or 350 $\mu\mu$fd. at the lower frequencies; the same values will serve even at 28 Mc., although 100 $\mu\mu$fd. will be ample for this and the 14-Mc. band. Still smaller condensers can be used at ultra-high frequencies. Since series tuning is used at a low-voltage point in the feeder system, the plate spacing of the condensers does not have to be large. Ordinary receiving-type condensers are large enough for plate voltages up to 1000, and the smaller transmitting condensers have high-enough voltage ratings for higher-power applications. With high-power 'phone it may be necessary to use condensers having a plate spacing of approximately 0.15 to 0.2 inch.

In parallel-tuned circuits (F, G, H, J) the antenna coil and condenser should be approximately the same as those used in the final tank circuit. The antenna tank circuit must be capable of being tuned independently to the transmitting frequency, and if possible provision should be made for tapping the coil so that the L/C ratio can be varied to the optimum value (§ 2-11) as determined experimentally.

In Fig. 1010-D, C_1 and C_2 may be 100 to 250 $\mu\mu$fd. each, the higher-capacity values being used for lower-frequency operation (3.5 and 1.75 Mc.). Plate spacing should in general be at least half that of the final amplifier tank condenser. For operation from 1.75 to 14 Mc., L_1 and L_2 each should be 15 turns 2½ inches in diameter, spaced to occupy 3 inches length, and tapped every three turns. Approximate settings are 15 turns for 1.75 Mc., 9 turns for 3.5 Mc., 6 turns for 7 Mc., and 3 turns for 14 Mc. The coils may be wound with No. 14 or No. 12 wire. This method of coupling is very seldom used at ultra-high frequencies.

Harmonic reduction — It is important to prevent, insofar as possible, harmonics in the output of the transmitter from being transferred to the antenna system. Untuned (Fig. 1010-A) and directly-coupled (Figs. 1010-B) systems do not discriminate against harmonics, and hence are more likely to cause harmonic radiation than the inductively-coupled tuned systems. Low-pass filter arrangements such as those at C and D, Fig. 1010, do discriminate against harmonics, but the direct coupling frequently is a source of trouble in this respect.

In inductively-coupled systems, care must be taken to prevent capacity coupling between coils. Link coils should always be coupled at a point of ground potential (§ 2-13) on the plate tank coil, and so should series and parallel-tuned coils (E and F) when possible. Capacity coupling can be practically eliminated by the use of a Faraday shield (§ 4-9) between the two coils.

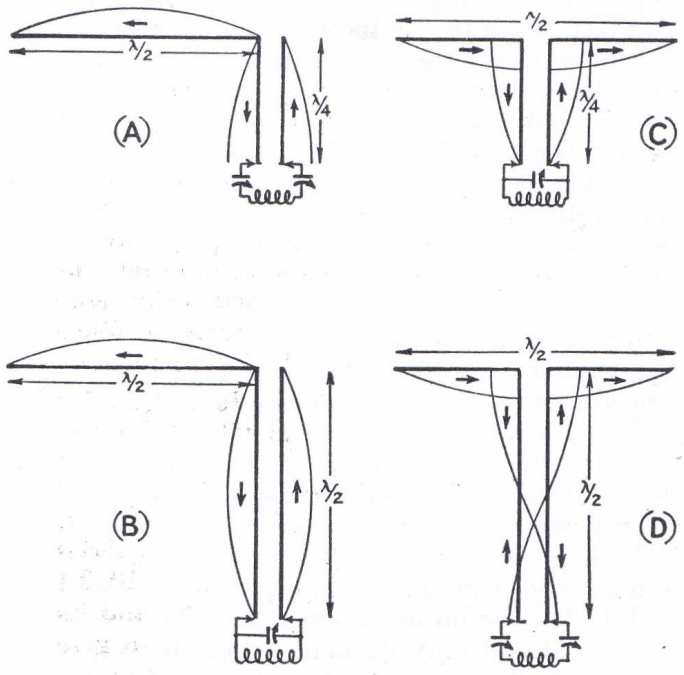

Fig. 1011 — Half-wave antennas fed from resonant lines. *A* and *B*, end feed with quarter- and half-wave lines; *C* and *D*, center feed. The current distribution is shown for all four cases. Arrows indicate instantaneous direction of current flow.

●10-7 RESONANT LINES

Two-wire lines — Because of its simplicity of adjustment and flexibility with respect to the frequency range over which an antenna system will operate, the resonant line is widely used with simple antenna systems. Constructionally, the spaced or "open" two-wire line is best suited to resonant operation; rubber-insulated lines such as twisted pair will have excessive losses when operated with standing waves.

Connection to antenna — A resonant line is usually — in fact, practically always — connected to the antenna at either a current or voltage loop. This is advantageous, especially when the antenna is to be operated at harmonic frequencies, since it simplifies the problem of determining the coupling system to be used at the input end of the transmission line.

Half-wave antenna with resonant line — It is often helpful to look upon the resonant

line simply as an antenna folded back on itself. Such a line may be any whole-number multiple of a quarter-wave in length; in other words any total wire length which will accommodate a whole number of standing waves. (The "length," however, of a two-wire line is always taken as the length of one of the wires.)

Quarter- and half-wave resonant lines feeding half-wave antennas are shown in Fig. 1011. The current distribution on both antenna and line is indicated. It will be noted that the quarter-wave line has maximum current at one end and minimum current at the other, determined by the point of connection to the antenna. The half-wave line, however, has the same current (and voltage) values at both ends.

If a quarter-wave line is connected to the end of an antenna as shown in Fig. 1011-A, then at the transmitter end of the line the current is high and the voltage low (low impedance) so that series tuning (§ 10–6) can be used. Should the line be a half-wave long, as at 1011-B, current will be minimum and voltage maximum (high impedance) at the transmitter end of the line, just as it is at the end of the antenna. Parallel tuning therefore is required (§ 10-6). The line could be coupled to a balanced final tank through small condensers, as in Fig. 1010-B, but the inductively-coupled circuit is preferable. An end-fed antenna with resonant feeders, as in 1011-A and B, is known as the "Zeppelin," or "Zepp," antenna.

The line also may be inserted at the center of the antenna at the maximum-current point. Quarter- and half-wave lines used in this way are shown at Fig. 1011-C and D. In C, the antenna end of the line is at a high-current, low-voltage point (§ 10-2), hence at the transmitter end the current is low and the voltage high. Parallel tuning therefore is used. The half-wave line at D has high current and low voltage at both ends, so that series tuning is used at the transmitter end.

The four arrangements shown in Fig. 1011 are thoroughly useful antenna systems, and are shown in more practical form in Fig. 1012. In each case the antenna is a half wavelength long, the exact length being calculated from Equations 2, 3 or 4 (§ 10-2) or taken from the charts of Fig. 1015. The line length should be an integral multiple of a quarter wavelength, and may be calculated from Equation 5 (§ 10-5) the result being multiplied by any whole number which gives a total length convenient for reaching from the antenna to the transmitter. If there is an *odd* number of quarter waves on the line in the case of the end-fed antenna,

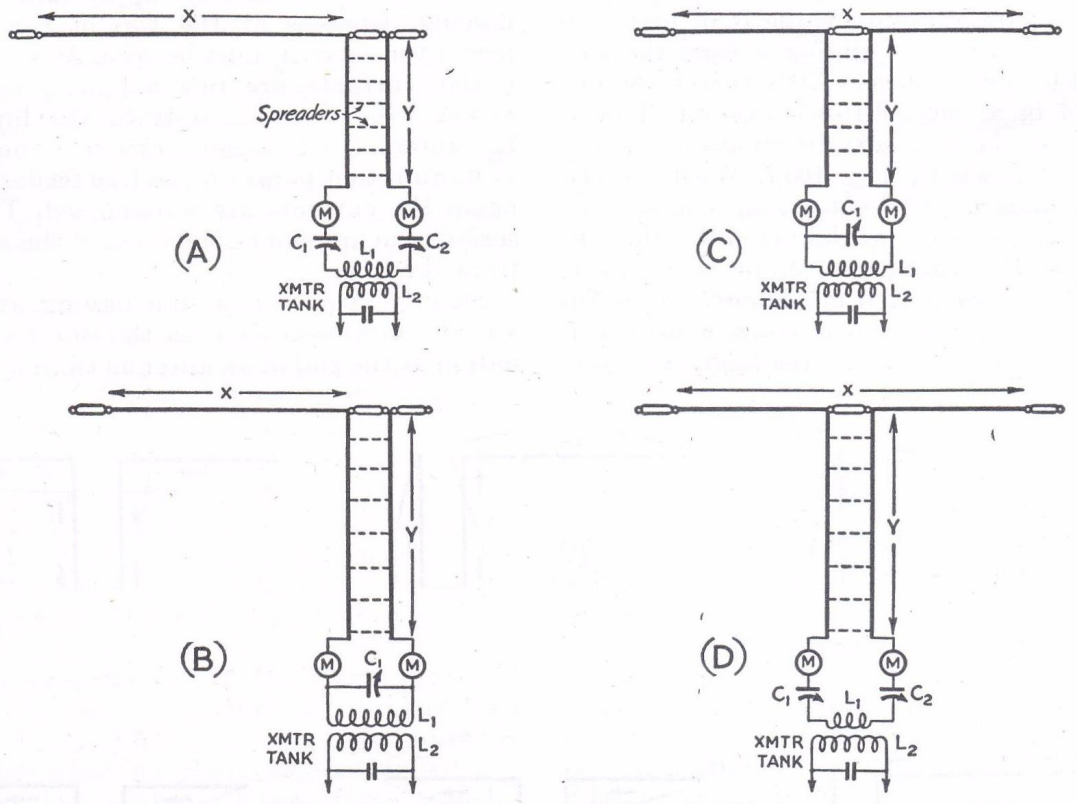

Fig. 1012 — **Practical half-wave antenna systems using resonant-line feed. In the center-feed systems, the antenna length "X" does not include the length of the insulator at the center. Line length is measured from the antenna to the tuning appartus; leads in the latter should be short enough to be neglected. The two meters shown are helpful for balancing feeder currents; however, one is sufficient for tuning for maximum output, and may be transferred from one feeder to the other, if desired. The systems at (A) and (C) are for feeders an odd number of quarter-waves in length; (B) and (D) for feeders a multiple of a half wavelength. The drawings correspond electrically to those of Fig. 1011.**

series tuning will be used at the transmitter end; if an *even* number of quarter waves, then parallel tuning is used. With the center-fed antenna the reverse is true.

Practical line lengths — In general, it is best to use line lengths that are integral multiples of a quarter wavelength. Intermediate lengths will give intermediate impedance values and will show reactance as well (§ 10-5). The tuning apparatus is capable of compensating for reactance but it may be difficult to get suitable transmitter loading because simple series and parallel tuning are suitable for only low and high impedances, respectively, and neither will perform well with impedances of the order of a few hundred ohms. Such values of impedance may reduce the *Q* of the coupling circuit to such a point that adequate coupling cannot be obtained (§ 2-11). However, some departure from the ideal length is possible — even as much as 25% of a quarter wave in many cases — without undue difficulty in tuning and coupling. In such cases the type of tuning to use, series or parallel, will depend on whether the feeder length is nearer an odd number of quarter waves or nearer an even number, as well as on the point at which the feeder is connected to the antenna.

Line current — The feeder current as read by the r.f. ammeters is useful for tuning purposes only; the absolute value is of little importance. When series tuning is used the current will be high, but very little current will be indicated in a parallel-tuned system. This is because of the current distribution on the feeders as shown by Fig. 1011. With a given antenna and tuning system, of course, the greatest power will be delivered to the antenna when the readings are highest. However, should the feeder length be changed no useful conclusions can be drawn from comparison between the new and old readings. For this reason any indicator which registers the relative intensity of r.f. current can be used for tuning purposes. Many amateurs, in fact, use flashlight or dial lamps for this purpose instead of meters. They are inexpensive, and when shunted by short lengths of wire so that considerable current can be passed without burnout will serve very well even with high-power transmitters.

Antenna length and line operation — Insofar as the operation of the antenna itself is concerned, departures of a few per cent from the exact length for resonance are of negligible consequence. Such inaccuracies may influence the behavior of the feeder system, however, and as a result may have an adverse effect on the operation of the system as a whole. This is true of the end-fed antennas such as are shown in Fig. 1012-A and -B.

For example, Fig. 1013-A shows the current distribution on the half-wave antenna and quarter-wave feeder when the antenna length is correct. At the junction of the "live" feeder and the antenna the current is minimum so that the currents in the two feeder wires are equal at all corresponding points along their length. When the antenna is too long, as in B, the current minimum occurs at a point on the antenna proper, so that at the top of the live feeder there is already appreciable current flowing, whereas at the top of the "dead" feeder the current must be zero. As a result, the feeder currents are not balanced and some power will be radiated from the line. In C the antenna is too short, bringing the current minimum to a point on the live feeder, so that again the currents are unbalanced. The more serious the unbalance the greater the radiation from the line.

Strictly speaking, a line having an unbalanced connection such as the one-way termination at the end of an antenna cannot be truly

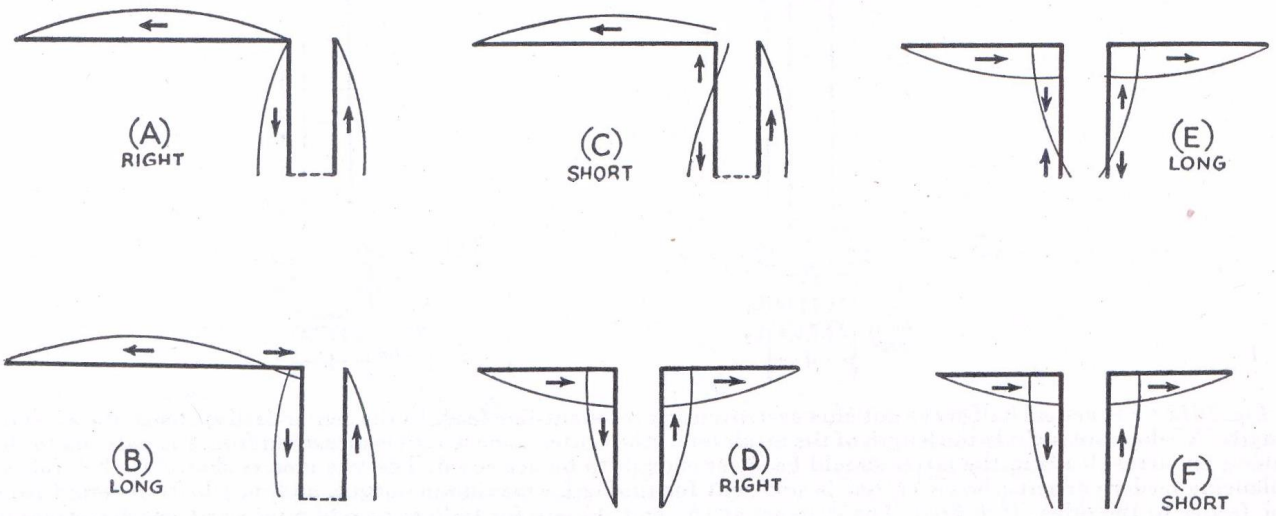

Fig. 1013 — Effect on feeder balance of incorrect antenna length. With center feed, incorrect antenna length does not unbalance the transmission line, as it does with end feed.

balanced even though the antenna length is correct. This is because of the difference in loading on the two sides. The effect is fairly small, however, when the currents are balanced.

If the antenna is fed at the center the undesirable effects of incorrect antenna length balance out so that the line operates properly under all conditions. This is shown in Fig. 1013 at D, E and F. So long as the two halves of the antenna are of equal length, the distribution of current on the feeders will be symmetrical so that no unbalance exists, even for antenna lengths considerably removed from the correct value.

• 10-8 NON-RESONANT LINES

Requirements — The advantages of non-resonant transmission lines — minimum losses, and elimination of the necessity for tuning — make this type of operation attractive. The chief disadvantage of the non-resonant line, aside from the necessity for more care in initial adjustment, is that when "matched" to the ordinary antenna it is matched only for one frequency, or at most for a small band of frequencies on either side of the frequency for which the matching is done. Except for a few special systems, this means that the antenna is unsuitable for work on more than one amateur band.

Adjustment of a non-resonant line is simply that of adjusting the terminating resistance to match the characteristic impedance of the line. To accomplish this, the antenna itself must be resonant at the selected frequency, and the line must then be connected to it in such a way that the antenna impedance as looked at by the line is the right value. The matching may be done by connecting the line at the proper spot along the antenna, by inserting an impedance transforming device between the antenna and line, or by using a line having an impedance equal to the center impedance of the antenna.

In the following discussion of ways in which different types of lines may be matched to the antenna, a half-wave antenna is used as an example. Other types of antennas may be treated by the same methods, making due allowance for the order of impedance that appears at the end of the line with more elaborate systems.

Single-wire feed — In the single-wire-feed system the return circuit is through the ground. There will be no standing waves on the feeder when its characteristic impedance is matched by the impedance of the antenna at the connection point. The principal dimensions are the length of the antenna *L*, Fig. 1014, and the distance *D* from the exact center of the antenna to the point at which the feeder is attached. Approximate dimensions

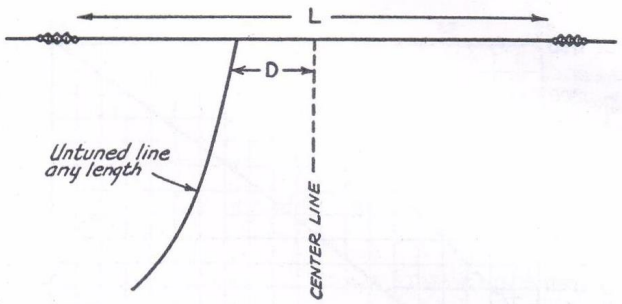

Fig. 1014 — Single-wire-feed system. The length L (one-half wavelength) and D are determined from the chart, Fig. 1015.

can be obtained from Fig. 1015 for an antenna system having a fundamental frequency in the most used amateur bands.

In constructing an antenna system of this type the feeder must run straight away from the antenna (at a right angle) for a distance of at least one-third the length of the antenna. Otherwise the field of the antenna will affect the feeder and cause faulty operation. There should be no sharp bends in the feeder wire at any point.

With the coupling system shown in Fig. 1016-A, adjustment is as follows: Starting at the ground end of the tank coil, the tap is moved towards the plate end until the amplifier draws the rated amount of plate current. The plate tank condenser should be readjusted each time the tap is changed, to bring the plate current to minimum. The amplifier is loaded properly when this "minimum" is the rated current. The condenser in the feeder is for the purpose of insulating the antenna system from the high-voltage plate supply when series plate feed is used. It should have a voltage rating somewhat above that of the plate supply. Almost any capacity greater than 500 $\mu\mu$fd. will be satisfactory. The condenser is unnecessary, of course, if parallel plate feed is used.

Inductive coupling to the output circuit is shown in Fig. 1016-B. The antenna tank circuit should tune to resonance at the operating frequency and the loading is adjusted by varying the coupling between the two tanks, both being kept tuned to resonance.

Regardless of the type of coupling, a good ground connection is essential with this system. Single-wire feed works best over moist ground, and poorly over rock and sand.

Twisted-pair feed — A two-wire line composed of twisted rubber-covered wire can be constructed to have an impedance approximately equal to that at the center of the antenna itself, thus permitting the method of connecting the line to the antenna shown in Fig. 1017. Any discrepancy which may exist between line and antenna impedance can be compensated for by a slight fanning of the line

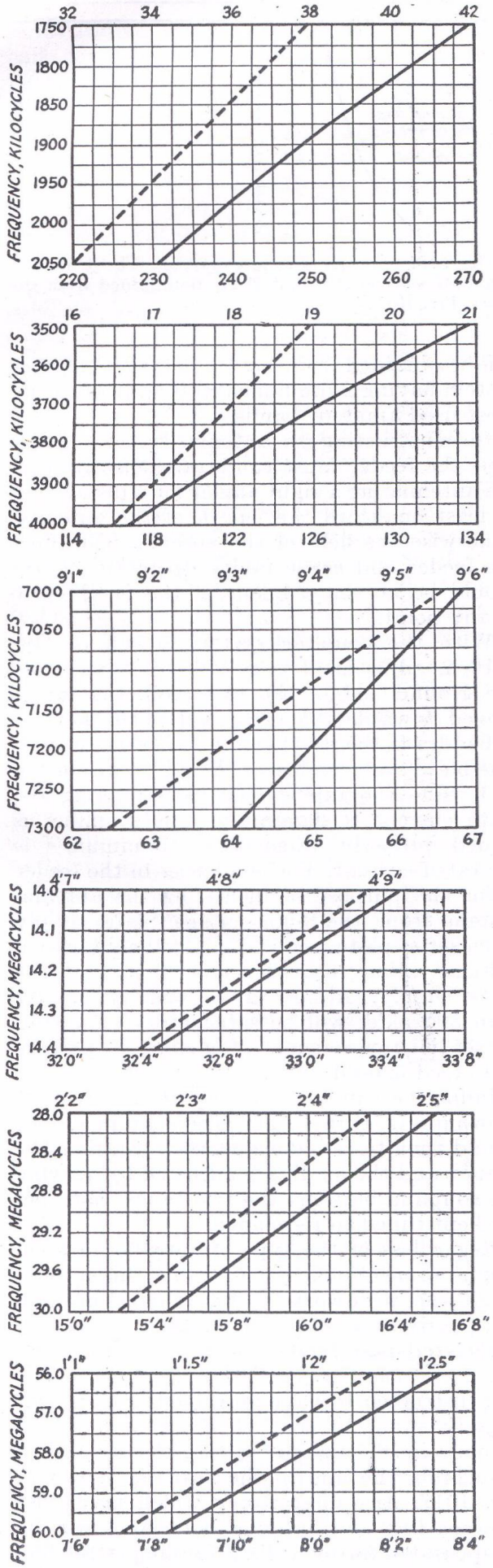

where it connects to the two halves of the antenna, as shown at *B* in Fig. 1017.

The twisted line is a convenient type to use, since it is easy to install and the r.f. voltage on it is low because of the low impedance. This makes insulation an easy matter. Special twisted line for transmitting purposes, having lower losses than ordinary rubber-covered wire, is available.

The antenna should be one-half wavelength long for the frequency of operation, as determined by charts of Fig. 1015 or the formulas (§ 10-2). The amount of "fanning" (dimension *B*) will depend upon the kind of cable used; the right value usually will be found between 6 and 18 inches. It may be checked by inserting ammeters in each antenna leg at the junction of the feeder and antenna; the value of *B* which gives the largest current is correct. Alternatively, the system may be operated continuously for a time with fairly high r.f. power input, after which the feeder may be inspected (by touch) for hot spots. These indicate the presence of standing waves, and the fanning should be adjusted until they are eliminated or minimized. Each leg of the feeder forming the triangle at the antenna should be equal in length to dimension *B*.

Coupling between transmitter and transmission line is ordinarily by the untuned coil method shown in Fig. 1010-A (§ 10-6).

Concentric-line feed — A concentric transmission line readily can be constructed to have a surge impedance equal to the 70-ohm impedance at the center of a half-wave antenna. Such a line, therefore, can be connected directly to the center of the antenna, forming the system shown in Fig. 1018.

Solving Equation (6) (§ 10-5) for an air-insulated concentric line shows that, for 70-ohm surge impedance, the inside diameter of the outer conductor should be approximately 3.2 times the outside diameter of the inner conductor. This condition can be fulfilled by using standard 5/16-inch (outside-diameter) copper tubing for the outer conductor and No. 14 wire for the inner. Ceramic insulating spacers are available commercially for this combination. Rubber-insulated concentric line having the requisite impedance for connection to the center of the antenna also is available.

The operation of such an antenna system is similar to that of the twisted-pair system just described, and the same transmitter-coupling arrangements may be used (§ 10-6).

The outer conductor of the line may be grounded if desired. The feeder system is

Fig. 1015 — Charts for determining the length of half-wave antennas for use on various amateur bands. Solid lines indicate antenna length (lower scale); dotted lines point of connection for single-wire feeder (upper scale) measured from center of antenna.

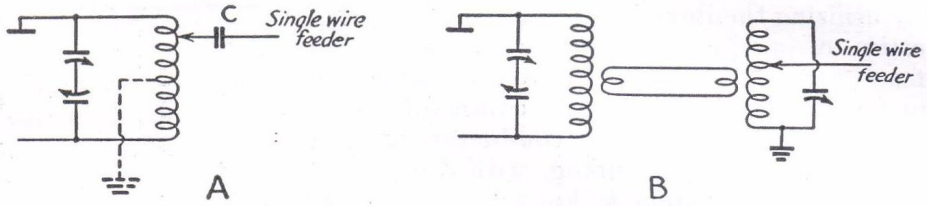

Fig. 1016 — Methods of coupling the single-wire feeder to the transmitter. Circuits are shown for both single-ended and balanced tank circuits.

slightly unbalanced because the inner and outer conductors do not have the same capacity to ground. There should be no radiation, however, from a line having a correct surge impedance.

Delta matching transformer — Because of the extremely close spacing required, it is impracticable to construct an open-wire transmission line which will have a surge impedance low enough to work directly into the center of a half-wave antenna. Such wire lines usually have impedances between 400 and 700 ohms, 600 ohms being a widely-used

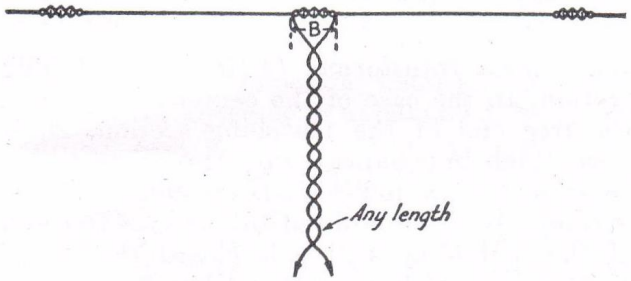

Fig. 1017 — Half-wave antenna center-fed by a twisted pair line.

value. It is therefore necessary to use other means for matching the line to the antenna.

One method of matching is illustrated by the antenna system of Fig 1019. The section E is "fanned" to have a gradually increasing impedance so that its impedance at the antenna end will be equal to the impedance of the antenna section C, while the impedance at the lower end matches that of a practicable transmission line.

The antenna length L, the feeder clearance E, the spacing between centers of the feeder wires D, and the coupling length C are the important dimensions of this system. The system

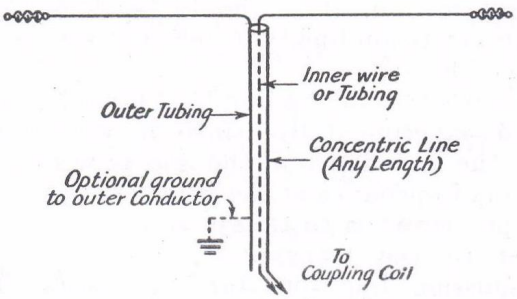

Fig. 1018 — Half-wave antenna with concentric transmission line.

must be designed for exact impedance values as well as frequency values and the dimensions are therefore fairly critical.

The length of the antenna is figured from the formula (§ 10-2) or taken from Fig. 1015.

The length of section C is computed by the formula:

$$C\ (feet) = \frac{123}{Freq.\ (Mc.)}$$

The feeder clearance E is found from the equation:

$$E\ (feet) = \frac{148}{Freq.\ (Mc.)}$$

The above equations are for feeders having a characteristic impedance of 600 ohms and will not apply to feeders of any other impedance. The proper feeder spacing for a 600-ohm transmission line is computed to a sufficiently close approximation by the following formula:

$$D = 75 \times d$$

where D is the distance between the centers of the feeder wires and d is the diameter of the wire. If the wire diameter is in inches the spacing will be in inches and if the wire diameter is in millimeters the spacing will be in millimeters.

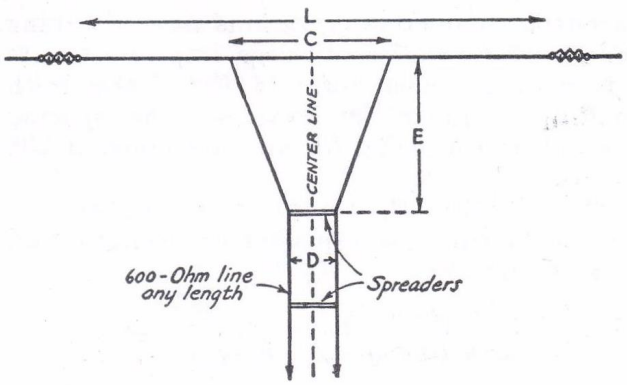

Fig. 1019 — Delta-matched antenna system. The dimensions C, D, and E are given in the text. It is important that the matching section, E, come straight away from the antenna without any bends.

Methods of coupling to the transmitter are discussed in § 10-6, Figs. 1010-C, D, G and H being suitable.

"Q"-section transformer — The impedance of a two-wire line of ordinary construction (400 to 600 ohms) can be matched to the impedance of the center of a half-wave antenna

by utilizing the impedance-transforming properties of a quarter-waveline (§ 10-5). The matching section must have low surge impedance and therefore is commonly constructed of large-diameter conductors such as aluminum or copper tubing, with fairly close spacing. This system is known as the "Q" antenna. It is shown in Fig. 1020. The important dimensions are the length of the antenna, the length of the matching section, B, the spacing between the two conductors of the matching section, C, and the impedance of the untuned transmission line connected to the lower end of the matching section.

The required surge impedance for the matching section is

$$Z_s = \sqrt{Z_1 Z_2} \qquad (9)$$

where Z_1 is the input impedance and Z_2 the output impedance. A quarter-wave section matching a 600-ohm line to the center of a half-wave antenna (72 ohms) should have a surge impedance of 208 ohms. The spacings

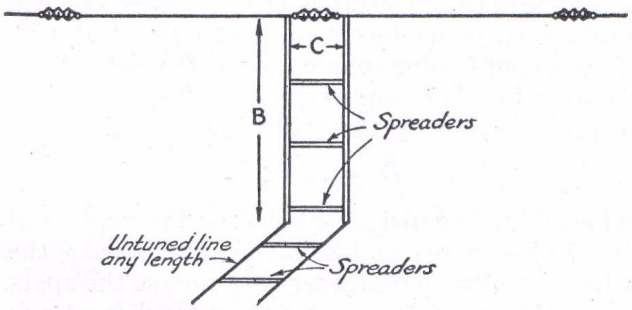

Fig. 1020 — **The "Q" antenna with quarter-wave matching section using spaced tubing.**

between conductors of various sizes of tubing and wire for different surge impedances are given in graphical form in Fig. 1009. With half-inch tubing, for example, the spacing should be 1.5 inches for an impedance of 208 ohms.

The length, B, of the matching section should be equal to a quarter wavelength, and is given by

$$\frac{\text{Length of } \frac{1}{4} \text{ wave line (feet)}}{} = \frac{234}{\text{Freq. (Mc.)}}$$

The length of the antenna can be calculated from the formula (§ 10-2) or taken from the charts of Fig. 1015.

This system has the advantage of the simplicity of adjustment of the twisted pair feeder system and at the same time the superior insulation of an open-wire system. Figs. 1010-B, D, G (§ 10-6) and H represent suitable methods of coupling to the transmitter.

Linear transformers — Fig. 1021 shows two methods of coupling a non-resonant line to a half-wave antenna through a quarter-

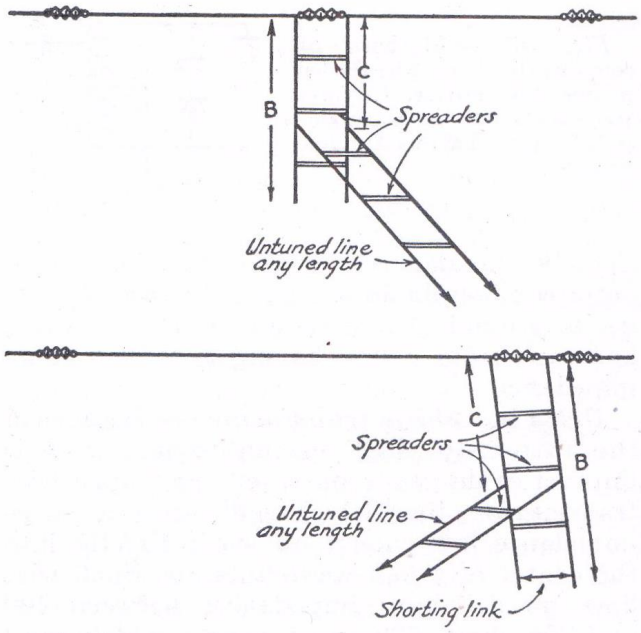

Fig. 1021 — **Half-wave antenna systems with quarter-wave open wire matching transformers.**

wave linear transformer (§ 10-5) or matching section. In the case of the center-fed antenna the free end of the matching section, B, is open (high impedance) since the other end is connected to a low-impedance point on the antenna. With the end-fed antenna the free end of the matching section is closed through a shorting bar or link; this end has low impedance since the other end is connected to a high-impedance point on the antenna (§ 10-7).

In the center-fed system, the antenna and matching section should be cut to lengths found from the equations in § 10-2 and § 10-5. Any necessary on-the-ground adjustment can be made by adding to or clipping off the open ends of the matching section. The matching section in the end-fed system can be adjusted by making the line a little longer than necessary and adjusting the system to resonance by moving the shorting link up and down. Resonance can be obtained by exciting the antenna at the proper frequency from a temporary antenna nearby and measuring the current in the shorting bar by a low-range r.f. ammeter or galvanometer. The position of the bar should be adjusted for maximum current reading. This should be done before the transmission line is attached to the matching section.

The position of the line taps must be determined experimentally, since it will depend upon the impedance of the line as well as the antenna impedance at the point of connection. The procedure is to take a trial point, apply power to the transmitter, and check the transmission line for standing waves. This can be done by measuring the current in the wires, using a device of the type pictured in

Fig. 1022. The hooks (which should be sharp enough to cut through insulation, if any, of the wires) are placed on one of the wires, the spacing between them being adjusted to give a suitable reading on the meter. At any one position along the line the currents in the two wires should be identical. Readings taken at intervals of a quarter wavelength will indicate whether or not standing waves are present.

It will not usually be possible to obtain complete elimination of standing waves when the matching stub is exactly resonant. The line taps should be adjusted for the smallest obtainable standing-wave ratio. Then a further "touching up" of the matching stub tuning will eliminate the remaining standing wave, provided the adjustments are made carefully. The stub must be readjusted because when resonant it exhibits some reactance as well as resistance at all points except at the ends, and the slight lengthening or shortening of the stub is necessary to tune out this reactance. The required readjustment is quite small, however.

When the connection between matching section and antenna is unbalanced, as in the end-fed system, it is important that the antenna be the right length for the operating frequency if a good match is to be obtained (§ 10-7). The balanced center-fed system is less critical in this respect. The shorting-bar method of tuning the center-fed system to resonance may be used if the matching section is extended to a half wavelength, bringing a current loop at the free end.

An impedance mismatch of several per cent is of little consequence so far as power transfer to the antenna is concerned. It is relatively easy to get the standing wave ratio down to 2 or 3 to 1, a perfectly satisfactory condition in practice. Of considerably greater importance is the necessity for getting the currents in the two wires balanced both as to amplitude and phase. If the currents are not the same at corresponding points on adjacent wires, and the loops and nodes do not also occur at corresponding points, there will be considerable radiation loss. This balance can only be brought about by perfect symmetry in the line, particularly with respect to ground. This symmetry should extend to the coupling apparatus at the transmitter. An electrostatic shield between the line and the transmitter coupling coils often will be of value in preventing capacity unbalance, and at the same time will reduce harmonic radiation.

●10-9 LONG-WIRE ANTENNAS

Definition — An antenna will be resonant if an integral number of standing waves of current and voltage can exist along its length; in other words, so long as its length is some integral multiple of a half-wavelength. When the antenna is more than a half-wave long, it is usually called a long-wire antenna, or a harmonic antenna.

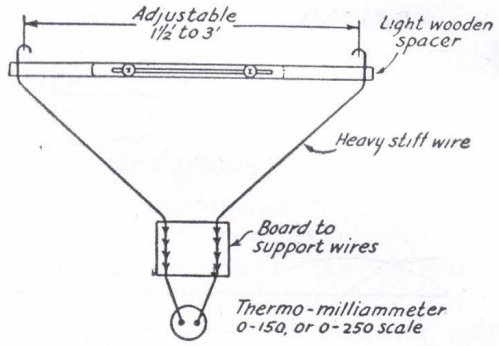

Fig. 1022 — **Line-current measuring device for adjustment of untuned transmission lines.**

Current and voltage distribution — Fig. 1023 shows the current and voltage distribution along a wire operating at its fundamental frequency (where its length is equal to a half wavelength) and at its second, third and fourth harmonics. For example, if the fundamental frequency of the antenna is 7 Mc., the current and voltage distribution will be as shown at A. The same antenna excited at 14 Mc. would have current and voltage distribution as shown at B. At 21 Mc., the third harmonic of 7 Mc., the current and voltage distribution would be as in C; and at 28 Mc., the fourth harmonic, as in D. The number of the harmonic is the number of half-waves contained in the antenna at the particular operating frequency.

The polarity of current or voltage in each standing wave is opposite to that in the adjacent standing waves. This is shown in the figure by drawing the current and voltage curves successively above and below the antenna (taken as a zero reference line) to indicate that the polarity reverses when the current or voltage goes through zero. Currents flowing in the same direction are *in phase;* in opposite directions, *out of phase.*

It is evident that one antenna may be used for harmonically related frequencies, such as the various amateur bands. The long-wire or harmonic antenna is the basis of multi-band operation with one antenna.

Physical lengths — The length of a long-wire antenna is not an exact multiple of that of a half-wave antenna because the end effects (§ 10-2) operate only on the end sections of the antenna; in other parts of the wire these effects are absent and the wire length is approximately that of an equivalent portion of the wave in space. The formula for the length of a long-wire antenna therefore is:

$$Length\ (feet) = \frac{492\ (N-0.05)}{Freq.\ (Mc.)} \qquad (10)$$

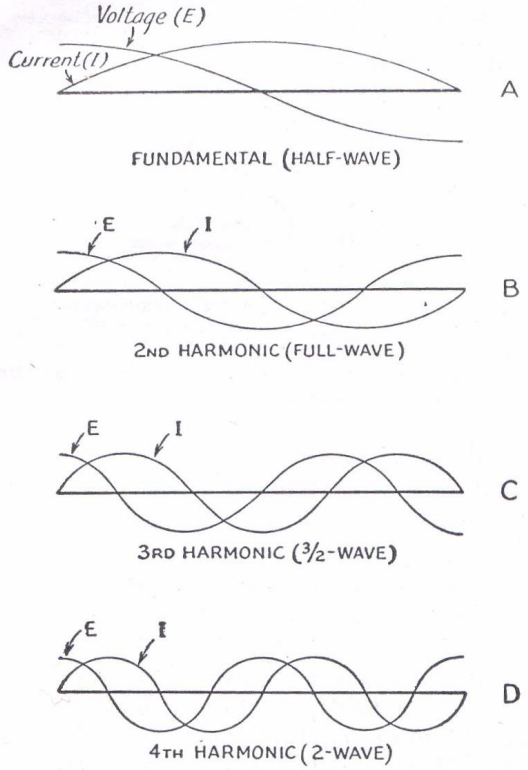

Fig. 1023 — Current and voltage distribution along an antenna operated at various harmonics of its fundamental resonant frequency.

where N is the number of *half*-waves on the antenna. From this it is apparent that an antenna cut as a half-wave for a given frequency will be slightly off resonance at exactly twice that frequency (on the second harmonic) because of the different behavior of end effects when there is more than one standing wave on the antenna. For instance, if the antenna is cut to exact fundamental resonance on the second harmonic (full wave) it should be 2.6% longer, and on the fourth harmonic (two-wave), 4% longer. The effect is not very important except for a possible unbalance in the feeder system (§ 10-7) which may result in some radiation from the feeder in end-fed systems.

Impedance and power gain — The radiation resistance as measured at a current loop becomes larger as the antenna length is increased. Also, a long-wire antenna radiates more power in its most favorable direction than does a half-wave antenna in *its* most favorable direction. This power gain is secured at the expense of radiation in other directions. Fig. 1024 shows how the radiation resistance and power in the lobe of maximum radiation vary with the antenna length.

Directional characteristics — As the wire is made longer, in terms of the number of half wavelengths, the directional effects change. Instead of the "doughnut" pattern of the half-wave antenna, the directional characteristic splits up into "lobes" which make various angles with the wire. In general, as the length of the wire is increased the direction of maximum radiation tends to approach the line of the antenna itself.

Directional characteristics for antennas one wavelength, three half-wavelengths, and two wavelengths long are given in Figs. 1025, 1026 and 1027, for three vertical angles of radiation. Note that as the wire length increases the radiation along the line of the antenna becomes more pronounced. Still longer antennas can be considered to be practically "end-on" radiators, even at the lower radiation angles.

Methods of feeding — In a long-wire antenna the currents in adjacent half-wave sections must be out of phase, as shown in Fig. 1028 and Fig. 1023. The feeder system must not upset this phase relationship. This requirement is met by feeding the antenna at either end or at any current *loop*. A two-wire feeder cannot be inserted at a current *node*, however, because this invariably brings the currents in two adjacent half-wave sections in phase; if the phase in one section could be reversed then the currents in the feeders would be in phase and the feeder radiation would not be cancelled out.

Either resonant or non-resonant feeders may be used. With the latter, the systems employing a matching section (§ 10-8) are best. The non-resonant line may be tapped on the matching section as in Fig. 1021 or a "Q" type section, Fig. 1020, may be employed.

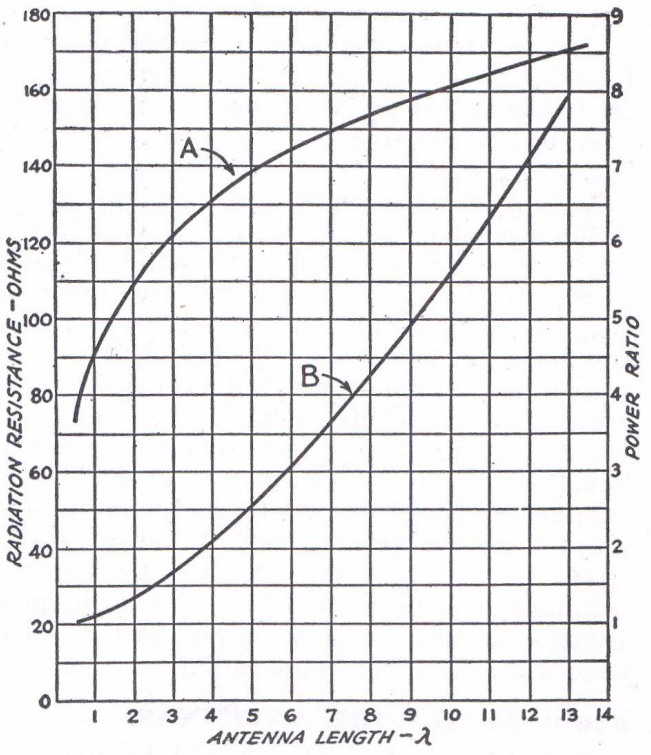

Fig. 1024 — Curve A, variation in radiation resistance with antenna length. Curve B, power in the lobes of maximum radiation for long-wire antennas as a ratio to the maximum of a half-wave antenna.

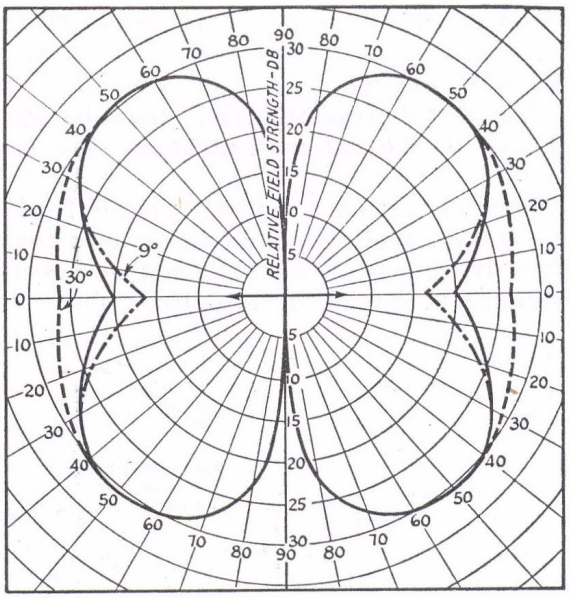

Fig. 1025 — Horizontal patterns of radiation from a full-wave antenna. Solid line, vertical angle 15 degrees; dotted lines, deviation from 15-degree pattern at 9 and 30 degrees.

All three patterns are drawn to the same relative scale; actual amplitudes will depend upon the height of the antenna.

In such case, Fig. 1029 gives the required surge impedance for the matching section. It can also be calculated from Equation 9 (§ 10-8) and the radiation resistance data in Fig. 1024.

Methods of coupling the line to the transmitter are the same as described in § 10-6 for the particular type of line used.

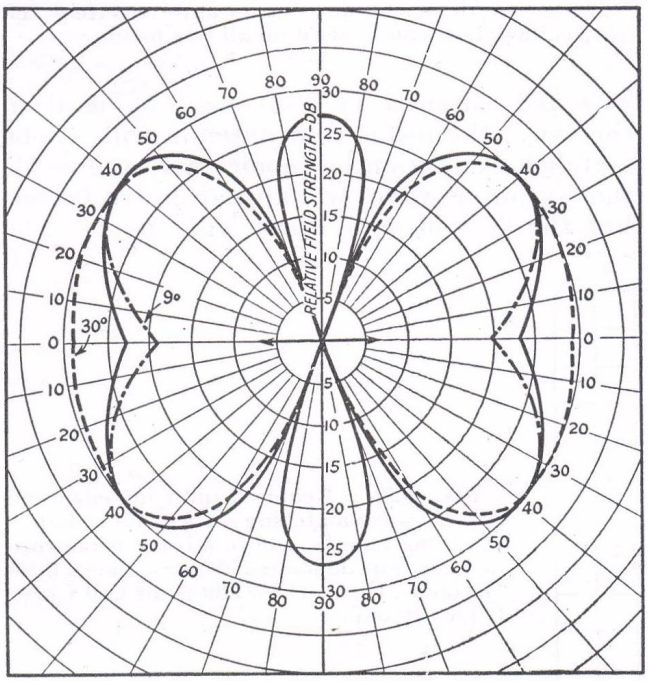

Fig. 1026 — Horizontal patterns of radiation from an antenna three half-wavelengths long. Solid line, vertical angle 15 degrees; dotted lines, deviation from 15-degree pattern at 9 and 30 degrees. The minor lobes coincide for all three angles.

● 10-10 MULTI-BAND ANTENNAS

Principles — As suggested in the preceding section, the same antenna may be used for several bands by operating it on harmonics. When this is done, it is necessary to use resonant feeders, since the impedance matching for non-resonant feeder operation can be accomplished only at one frequency unless means are provided for changing the length of a matching section and shifting the point at which the feeder is attached to it. A matching section which is a quarter-wavelength long on one frequency will be a half-wavelength long on twice that frequency, and so on, and changing

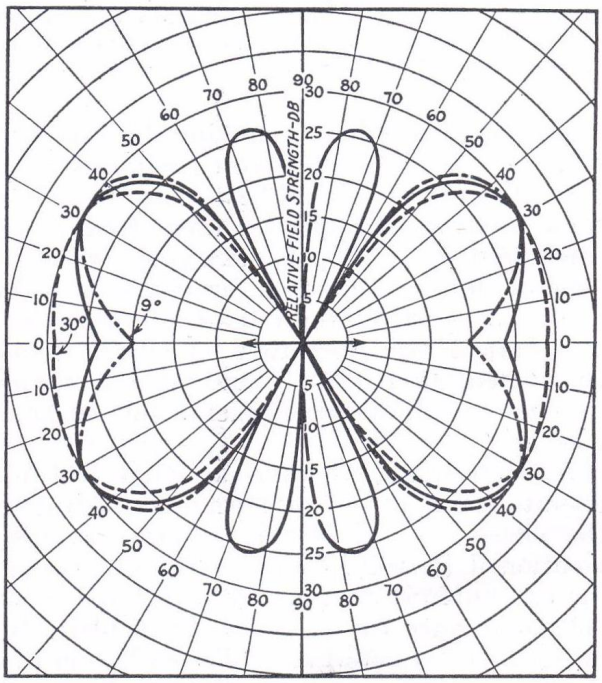

Fig. 1027 — Horizontal patterns of radiation from an antenna two wavelengths long. Solid line, vertical angle 15 degrees; dotted lines, deviation from 15-degree pattern at 9 and 30 degrees. The minor lobes coincide for all three angles.

the length of the wires, even by switching, is inconvenient.

Also, the current loops shift to a new position on the antenna when it is operated on harmonics, further complicating the feed situation. It is for this reason that half-wave antennas center-fed by rubber-insulated lines are practically useless for harmonic operation; on all even harmonics there is a voltage maximum at the feed point and the impedance mismatch is so bad that there is a large standing-wave ratio and consequently high losses in the rubber dielectric.

When the same antenna is used for work in several bands, it must be realized that the directional characteristic will depend on the band in use.

Simple systems — Any of the antenna arrangements shown in § 10-7 may be used for

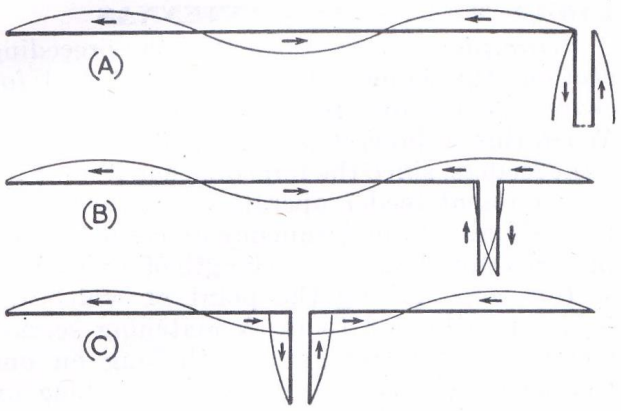

Fig. 1028 — Current distribution and feed points for long-wire antennas. A 3/2-wave antenna is used as an illustration. With two-wire feed, the line may be connected at the end of the antenna or at any current *loop* (not at a current node).

multi-band operation by making the antenna a half wave long at the lowest frequency to be used. The feeders should be a quarter wave, or some multiple of a quarter wave, long at the same frequency. Typical examples, with the type of tuning to be used, are given in Table I. The figures given represent a compromise to give satisfactory operation on all the bands considered, taking into account the change in required length as the order of the harmonic goes up.

A center-fed half-wave antenna will not operate as a long wire on harmonics because of the phase reversal at the feeders previously mentioned (§ 10-9). On the second harmonic, the two antenna sections are each a half wave long, and since the currents are in phase the directional characteristic is different from that of a full-wave antenna even though the overall length is the same. On the fourth harmonic, each section is a full wave long and again because of the direction of current flow the system will not operate as a two-wave antenna. It should not be assumed that these systems are not effective radiators — it is simply that the directional characteristic will not be that of a long-wire having the same overall length. Rather it will resemble the characteristic of one side of the antenna, although this is not exact.

Antennas with a few other types of feed systems may be operated on harmonics for the higher-frequency bands, although their performance is somewhat impaired. The single-wire fed antenna (§ 10-8) may be used in this way; the feeder and antenna will not be matched exactly on harmonics with the result that standing waves will appear on the feeder, but the system as a whole will radiate. The

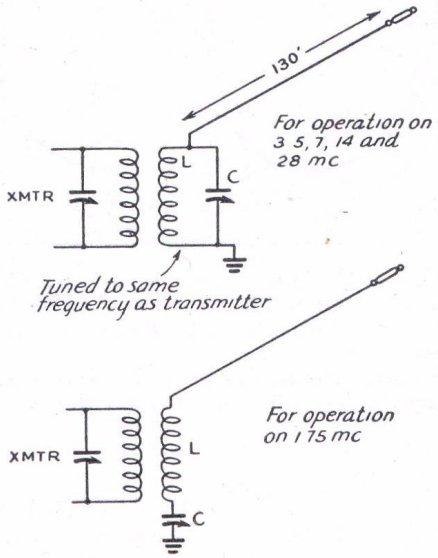

Fig. 1030 — A simple antenna system for five amateur bands. The antenna is voltage fed on 3.5, 7, 14 and 28 Mc., working on the fundamental, second, fourth and eighth harmonics, respectively. For 1.75 Mc. the system is a quarter-wave grounded antenna, in which case series tuning must be used. The antenna wire should be kept well in the clear and should be as high as possible. If the length of the antenna is approximately 260 feet, voltage feed can be used on all five bands.

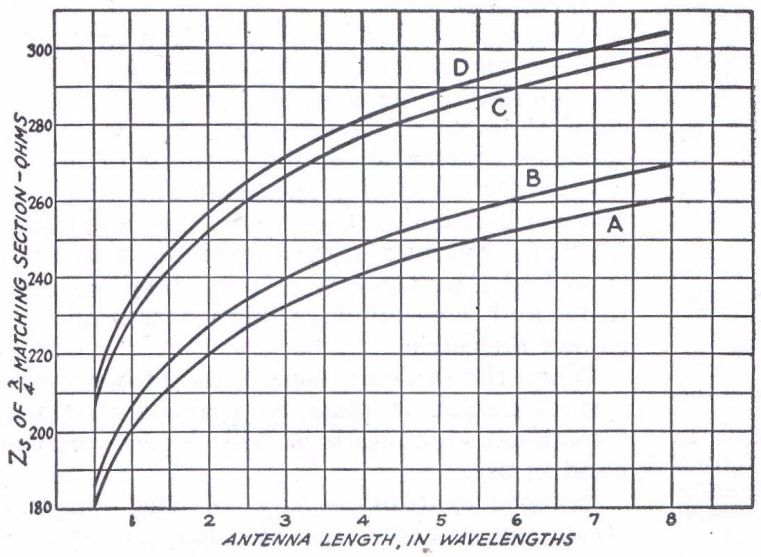

Fig. 1029 — Required surge impedance of quarter-wave matching sections for radiators of various lengths. Curve A is for a transmission line impedance of 440 ohms, Curve B for 470 ohms, Curve C for 580 ohms and Curve D for 600 ohms.

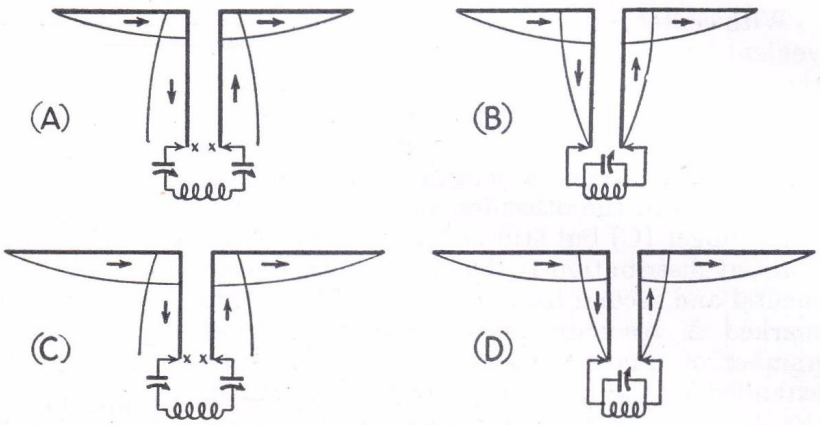

Fig. 1031 — Current distribution on antennas too short for the fundamental frequency. These systems may be used when space for a full half-wave antenna is not available. The current distribution on the second harmonic also is shown to the right of each figure. In A and C, the total length around the system is a half-wavelength at the fundamental frequency. Arrows show instantaneous direction of current flow.

TABLE I

MULTI-BAND RESONANT-LINE FED ANTENNAS

Antenna Length (ft.)	*Feeder Length (ft.)*	*Band*	*Type of Tuning*
With end feed: 243	120	1.75-Mc. 'phone	series
		4-Mc. 'phone	parallel
		14 Mc.	parallel
		28 Mc.	parallel
136	67	3.5-Mc. c.w.	series
		7 Mc.	parallel
		14 Mc.	parallel
		28 Mc.	parallel
134	67	3.5-Mc. c.w.	series
		7 Mc.	parallel
67	33	7 Mc.	series
		14 Mc.	parallel
		28 Mc.	parallel
With center feed: 272	135	1.75 Mc.	parallel
		3.5 Mc.	parallel
		7 Mc.	parallel
		14 Mc.	parallel
		28 Mc.	parallel
137	67	3.5 Mc.	parallel
		7 Mc.	parallel
		14 Mc.	parallel
		28 Mc.	parallel
67.5	34	7 Mc.	parallel
		14 Mc.	parallel
		28 Mc.	parallel

The antenna lengths given represent compromises for harmonic operation because of different end effects on different bands. The 136-foot end-fed antenna is slightly long for 3.5 Mc., but will work well in the region (3500–3600 kc.) which quadruples into the 14-Mc. band. Bands not shown are not recommended for the particular antenna. The center-fed systems are less critical as to length; the 272-foot antenna may, for instance, be used for both c.w. and 'phone on either 1.75 or 4 Mc. without loss of efficiency.

On harmonics, the end-fed and center-fed antennas will not have the same directional characteristics, as explained in the text.

same is true of the delta-matched antenna. The "Q" antenna (§ 10-8) also can be operated on harmonics, but the line cannot operate non-resonant except at the fundamental frequency of the antenna. For harmonic operation the line must be tuned and, therefore, the feeder length is important. The tuning system will depend upon the number of quarter waves on the line, including the "Q" bars. The concentric-line fed antenna (§ 10-8) may be used on harmonics if the concentric line is air-insulated. Its operation on harmonics is similar to that of the "Q." This antenna is not recommended for multi-band operation with a rubber-insulated line, however.

A simple antenna system, without feeders, for operation in five bands is shown in Fig. 1030. On all bands from 3.5 Mc. upward it operates as an end-fed antenna — half-wave on 3.5 Mc., long wire on the other bands. On 1.75 Mc. it is only a quarter-wave in length and must be worked against ground, which in effect replaces the missing half of the antenna. Since on this band it is fed at a high-current point, series tuning (§ 10-6) must be used.

Antennas for restricted space — If the space available for the antenna is not large enough to accommodate the length necessary for a half-wave at the lowest frequency to be used, quite satisfactory operation can be secured by using a shorter antenna and making up the missing length in the feeder system. The antenna itself may be as short as a quarter wavelength and still radiate fairly well, although of course it will not be as effective as one a half-wave long. Nevertheless such a system is useful where operation on the desired band otherwise would be impossible.

Resonant feeders are a practical necessity with such an antenna system, and a center-fed antenna will give best all-around performance. With end feed the feeder currents become badly unbalanced and, since lengths midway between those requiring series or parallel tuning ordinarily must be used to bring the entire system to resonance, coupling to the transmitter often becomes difficult.

With center feed, practically any convenient length of antenna can be used if the feeder length is adjusted to accommodate at least one half-wave around the whole system. Typical cases are shown in Fig. 1031, one for an antenna having a length of one-quarter wave (A) and the other for an antenna somewhat longer (C) but still not a half-wave long. Current distribution is shown for both fundamental and second harmonic. From the points marked *X* resonant feeders any convenient number of quarter waves in length may be extended to the operating room. The sum of the distances on each wire from *X* to the antenna end must equal a half-wave. It is sufficiently accurate to use Equation 2 (§ 10-2) in calculating this length. Note that *X*-*X* is a high-current point on these shortened antennas, corresponding to the center of a half-wave antenna. It is also apparent that the antenna at A is a half-wave antenna on the next higher-frequency band (B).

The practical antenna can be made as in Fig. 1032. Table II gives a few recommended lengths. Remembering the preceding discussion, however, the antenna can be made any convenient length provided the feeder is considered to "begin" at *X*-*X*, and the line length adjusted accordingly.

TABLE II

ANTENNA AND FEEDER LENGTHS FOR SHORT MULTI-BAND ANTENNAS, CENTER-FED

Antenna Length (ft.)	*Feeder Length (ft.)*	*Band*	*Type of Tuning*
137	68	1.75 Mc. 3.5 Mc. 7 Mc. 14 Mc. 28 Mc.	series parallel parallel parallel parallel
100	38	3.5 Mc. 7 Mc. 14 Mc. 28 Mc.	parallel series series series or parallel
67.5	34	3.5 Mc. 7 Mc. 14 Mc. 28 Mc.	series parallel parallel parallel
50	43	7 Mc. 14 Mc. 28 Mc.	parallel parallel parallel
33	51	7 Mc. 14 Mc. 28 Mc.	parallel parallel parallel
33	31	7 Mc. 14 Mc. 28 Mc.	parallel series parallel

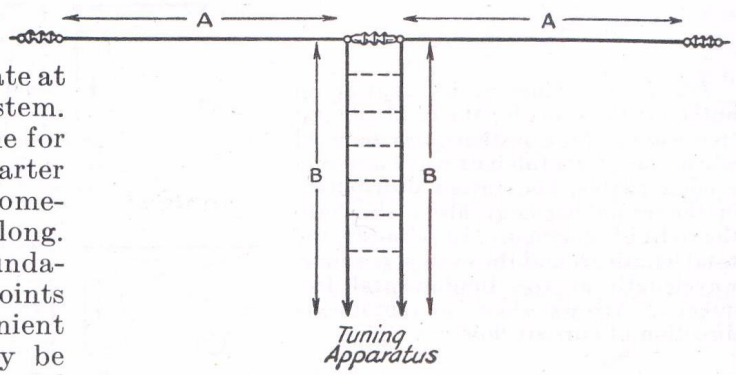

Fig. 1032 — Practical arrangement of a shortened antenna. The total length A + B + B + A, should be a half-wavelength for the lowest-frequency band, usually 3.5 Mc. See Table II for lengths and tuning data.

Bent antennas — Since the field strength at a distance is proportional to the current in the antenna, the high-current part of a half-wave antenna (the center quarter-wave, approximately) does most of the radiating (§ 10-1). Advantage can be taken of this fact when the space available does not permit erecting an antenna a half-wave long. To accomplish it, the ends may be bent, either horizontally or vertically, so that the total length equals a half wave, even though the straightaway horizontal length may be as short as a quarter wave. The operation is illustrated in Fig. 1033. Such an antenna will be a somewhat better radiator than the arrangement of Fig. 1031-A on the lowest frequency, but is not as desirable for multi-band operation because the ends play an increasingly important part as the frequency is raised. The performance of the system in such a case is difficult to predict, especially if the ends are vertical (the most convenient arrangement) because of the combination of horizontal and vertical polarization as well as dissimilar directional characteristics.

● 10-11 LONG-WIRE DIRECTIVE ARRAYS

The "V" antenna — It has been emphasized that as the antenna length is increased the lobe of maximum radiation makes a more acute angle with the wire (§ 10-9). Two such

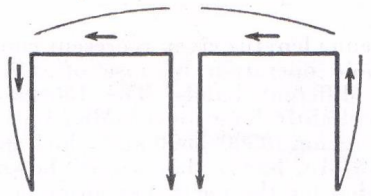

Fig. 1033 — Folded arrangement for shortened antennas. The total length is a half-wave, not including the feeders. The horizontal part is made as long as convenient and the ends dropped down to make up the required length. The ends may be bent back on themselves in feeder fashion to cancel radiation partially. The horizontal section should be at least a quarter-wave long.

wires may be combined in the form of a horizontal "V" so that the main lobes from each wire will reinforce along a line bisecting the angle between the wires. This increases both gain and directivity, since the lobes in directions other than along the bisector cancel to a greater or lesser extent. The horizontal "V" antenna therefore transmits best in either direction (is bi-directional) along the line bisecting the "V" made by the two wires. The power gain depends upon the length of the wires. Provided the necessary space is available, the "V" is a simple antenna to build and operate, and can be used readily on harmonics so that it is suitable for multi-band work. The "V" antenna is shown in Fig. 1034.

Fig. 1035 shows the dimensions that should be followed for an optimum design to obtain maximum power gain for different-sized "V" antennas. The longer systems give good performance in multi-band operation. Angle α is approximately equal to twice the angle of maximum radiation for a single wire equal in length to one side of the "V."

The wave angle referred to in Fig. 1035 is the vertical angle of maximum radiation (§ 10-1). Tilting the whole horizontal plane of the "V" will tend to increase the low-angle radiation off the low end and decrease it off the high end.

The gain increases with the length of the wires, but is not exactly twice the gain for a single long wire as given in Fig. 1024. In the longer lengths, the gain will be somewhat increased because of mutual coupling between the wires. A "V" eight wavelengths on a leg, for instance, will have a gain of about 12 db. over a half-wave antenna, whereas twice the gain of a single 8-wavelength wire would be approximately 9 db.

The two wires of the "V" must be fed out of phase for correct operation. A resonant line may simply be attached to the ends as shown in Fig. 1034. Alternatively, a quarter-wave matching section may be employed and the antenna fed through a non-resonant line (§ 10-8). If the antenna wires are made multiples of a half-wave in length (use Equation 10, § 10-9, for computing the length) the matching section will be closed at the free end.

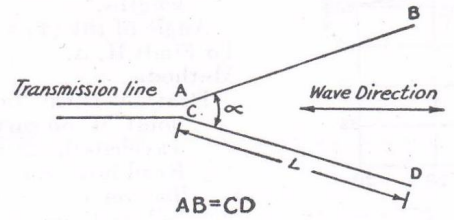

Fig. 1034 — The "V" antenna, made by combining two long wires in such a way that each reinforces the other's radiation. The important quantities are the length of each leg and the angle between legs.

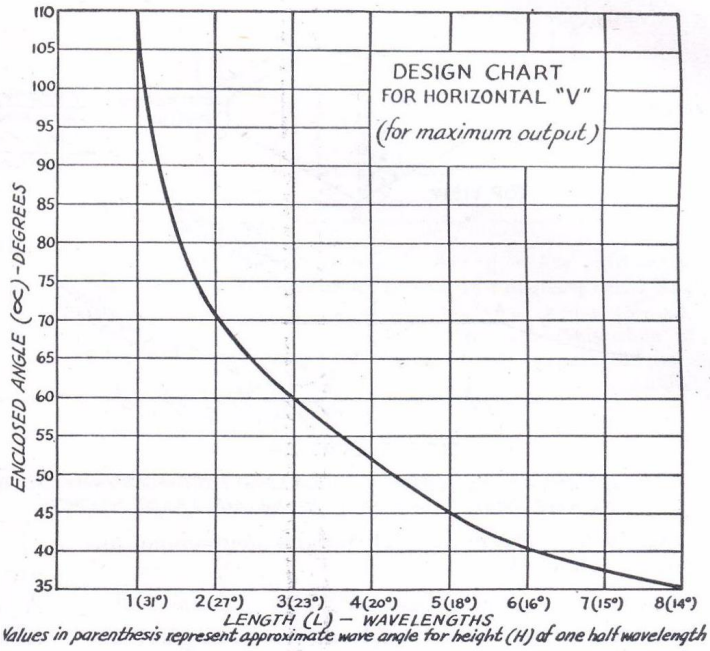

Fig. 1035 — Design chart for horizontal "V" antennas. Enclosed angle between wires versus length of sides.

The rhombic antenna — The horizontal rhombic or "diamond" antenna is shown in Fig. 1036. Like the "V," it requires a good deal of space for erection, but it is capable of giving excellent gain and directivity. It can also be used for multi-band operation. In the terminated form shown in Fig. 1036 it operates, like a non-resonant transmission line, without standing waves, and is uni-directional. It may also be used without the terminating resistor, in which case there are standing waves on the wires and the antenna is bi-directional.

The important quantities influencing the design of the rhombic antenna are shown in Fig. 1036. While several design methods may be used, the one most applicable to the conditions existing in amateur work is the so-called "compromise" method. The chart of Fig. 1037 gives design information based on a given length and wave angle to determine the remaining optimum dimensions for best operation. Curves for values of length of 2, 3 and 4 wavelengths are shown, and intermediate values may be interpolated.

With all other dimensions correct, an increase in length causes an increase in power gain and a slight reduction in wave angle. An increase in height also causes a reduction in wave angle and an increase in power gain but not to the same extent as a proportionate increase in length.

For multi-band work, it is satisfactory to design the rhombic antenna on the basis of 14-Mc. operation, which will permit work on the 7- and 28-Mc. bands as well.

A value of 800 ohms is correct for the terminating resistor for any properly constructed

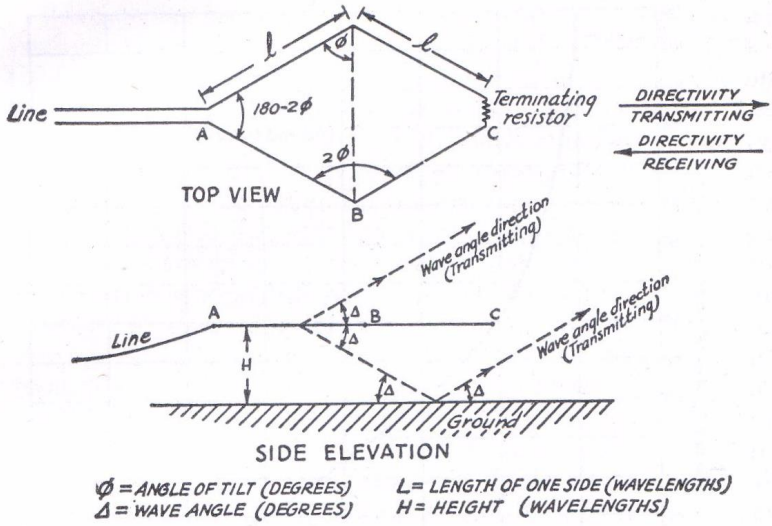

Fig. 1036 — The horizontal rhombic or diamond antenna, terminated.

rhombic, and the system behaves as a pure resistive load under this condition. This terminating resistor must be capable of safely dissipating one-half the power output (to eliminate the rear pattern) and should be non-inductive. Such a resistor may be made up from a carbon or graphite rod or from a long 800-ohm transmission line using resistance wire. If the carbon rod or a similar form of lumped resistance is used the device should be suitably protected from weather effects, i.e., covered with good asphaltic compound and sealed in a small light-weight box or fibre tube. Suitable resistors are available commercially.

For feeding the antenna, the antenna impedance will be matched by an 800-ohm line, which may be constructed from No. 16 wire spaced 20 inches or from No. 18 wire spaced 16 inches. The 800-ohm line is somewhat ungainly to install, however, and may be replaced by an ordinary 600-ohm line with only a negligible mismatch.

Alternatively, a matching section may be installed between the antenna terminals and a low-impedance line. However, when such an arrangement is used it will be necessary to change the matching section constants for each different band of operation.

The same design details apply to the unterminated rhombic as to the terminated type. Resonant feeders are preferable for the unterminated rhombic. A non-resonant line may be used by incorporating a matching section at the antenna, but is not readily adaptable to multi-band work.

Rhombic antennas will give a power gain of 10 db. or more when constructed according to the charts given. In general, the larger the antenna the greater the power gain.

•10-12 DIRECTIVE ARRAYS WITH DRIVEN ELEMENTS

Principles — By combining individual half-wave antennas into an *array* with suitable spacing between antennas (called *elements*) and feeding power to them simultaneously, it is possible to make the radiated fields from the individual elements add in a favored direction, thus increasing the field strength in that

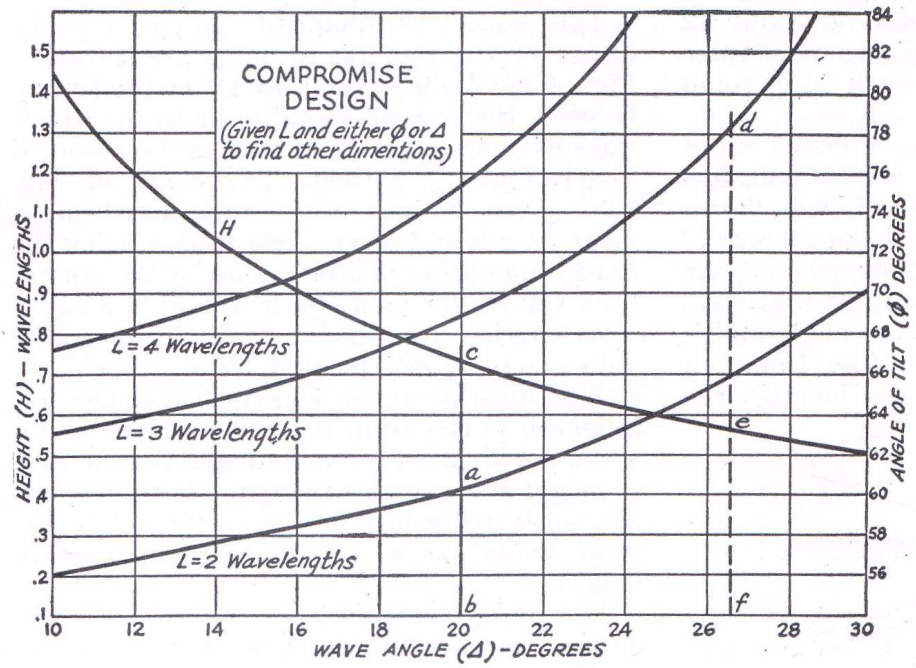

Fig. 1037 — Compromise method design chart for various leg lengths and wave angles. The following examples illustrate the use of the Chart:

(1) Given: Length (L) = 2 wave-lengths.
Desired wave angle (Δ) = 20°.
To Find: H, Φ.
Method:
Draw vertical line through point "a" (L = 2 wavelengths) and point "b" on abscissa (Δ = 20°.) Read angle of tilt (Φ) for point "a" and height (H) from intersection of line ab at point "c" on curve H.
Result:
Φ = 60.5°.
H = 0.73 wavelength.

(2) Given:
Length (L) = 3 wavelengths.
Angle of tilt (Φ) = 78°.
To Find: H, Δ.
Method:
Draw vertical line from point "d" on curve L = 3 wavelengths at Φ = 78°. Read intersection of this line on curve H (point "e" and intersection at point "f" on the abscissa for Δ.
Result:
H = 0.56 wavelength.
Δ = 26.6°.

direction as compared to that produced by one antenna element alone. In other directions the fields will more or less oppose each other, giving a reduction in field strength. Thus the power gain in the desired direction is secured at the expense of a power reduction in other directions.

Besides spacing between elements, the instantaneous direction of current flow (*phase*) in individual elements determines the directivity and power gain. There are several methods of arranging the elements. If they are strung end to end so that all lie on the same straight line, the elements are said to be *collinear*. If they are parallel and all lying in the same plane, the elements are said to be *broadside* when the phase of the current is the same in all, and *end-fire* when the currents are not in phase. Elements which receive power from the transmitter through the transmission line are called *driven elements*.

The power gain of a directive system increases with the number of elements. The proportionality between gain and number of elements is not simple, however, but depends upon the effect of the spacing and phasing upon the radiation resistance of the elements, as well as upon their number.

Collinear arrays — Simple forms of collinear arrays, with the current distribution, are shown in Fig. 1038. The two-element array at *A* is popularly known as "two half-waves in phase." It will be recognized as simply a center-fed antenna operated at its second harmonic. The way in which the number of elements may be extended for increased directivity and gain is shown in Fig. 1038-B. Note that quarter-wave transmission lines are used between each element; these give the reversal in phase necessary to make the currents in individual antenna elements all flow in the same direction at the same instant. Another way of looking at it is to consider that the whole system is a long wire with alternate half-wave sections folded so that they do not radiate. Any phase-reversing section may be used as a quarter-wave matching section for attaching a non-resonant feeder (§ 10-8), or a resonant transmission line may be substituted for any of the quarter-wave sections. Also, the antenna may be end-fed by any of the systems previously described (§ 10-7, 10-8) or any

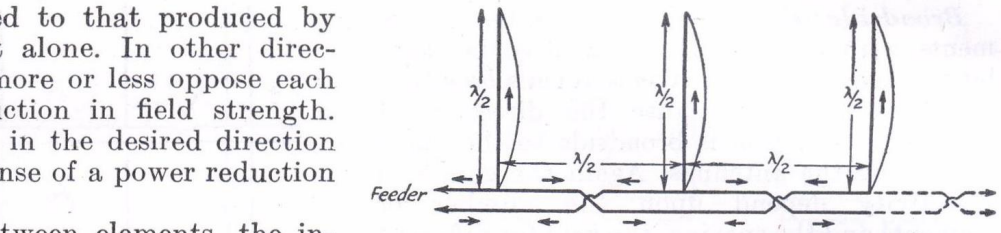

Fig. 1039 — The broadside array using half-wave elements. Arrows indicate direction of current flow. The transposition in feeders is necessary to bring the antenna currents in phase. Any reasonable number of elements may be used. The array is bi-directional perpendicular to the plane of the antenna; i.e., perpendicularly through this page.

element may be center-fed. It is best to feed at the center of the array so that the energy will be distributed as uniformly as possible among the elements.

The gain and directivity depend upon the number of elements and their spacing, center-to-center. This is shown by Table III. Although ¾-wave spacing gives greater gain, it is difficult to construct a suitable phase-reversing system when the ends of the antenna elements are widely separated. For this reason the half-wave spacing is generally used.

TABLE III

THEORETICAL GAIN OF COLLINEAR HALF-WAVE ANTENNAS

Spacing Between Centers of Adjacent Half Waves	*Number of Half Waves in Array vs. Gain in db.*				
	2	3	4	5	6
½ Wave	1.8	3.3	4.5	5.3	6.2
¾ Wave	3.2	4.8	6.0	7.0	7.8

Collinear arrays may be mounted either horizontally or vertically. Horizontal mounting gives horizontal directivity, with vertical directivity the same as for a single element at the same height. Vertical mounting gives the same horizontal pattern as a single element, but concentrates the radiation at low angles. It is seldom possible to use more than two elements vertically at frequencies below 14 Mc. because of the height required.

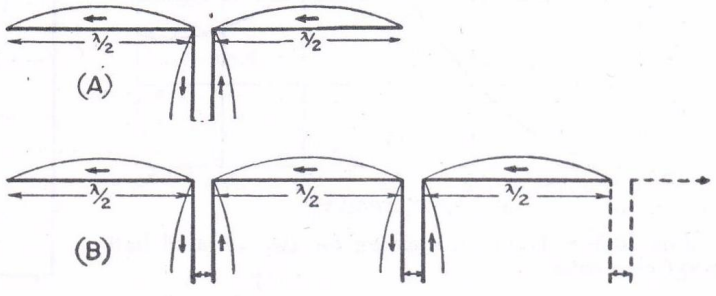

Fig. 1038 — Collinear half-wave antennas in phase. The system at *A* is generally known as "two-half-waves in phase." *B* is an extension of the system; in theory it may be carried on indefinitely, but practical considerations usually limit the number of elements to four.

Broadside arrays — Parallel antenna elements with currents in phase may be combined as shown in Fig. 1039 to form a *broadside* array, so named because the direction of maximum radiation is broadside to the plane containing the antennas. Again the gain and directivity depend upon the number of elements and the spacing, the gain for different spacings being shown in Fig. 1040. Half-wave spacing is generally used, since it simplifies feeding when the array has more than two elements. Table IV gives theoretical gain as a function of the number of elements.

Broadside arrays may be suspended either with the elements all vertical or with them horizontal and one above the other (*stacked*). In the former case the horizontal pattern is quite sharp while the vertical pattern is that of one element alone. If the array is suspended horizontally the horizontal pattern is that of one element while the vertical pattern is sharp, giving low-angle radiation.

Broadside arrays may be fed either by resonant transmission lines (§ 10-7) or through quarter-wave matching sections and nonresonant lines (§ 10-8). In Fig. 1039, note the "crossing over" of the feeder, necessary to bring the elements in proper phase relationship.

Combined broadside and collinear arrays — Broadside and collinear arrays may be combined to give both horizontal and vertical directivity, as well as additional gain. The general plan of constructing such antennas is shown in Fig. 1041. The lower angle of radiation resulting from stacking elements in the vertical plane is desirable at the higher frequencies. In general, doubling the number of elements in an array by stacking will raise the gain 2 to 4 db., depending upon whether vertical or horizontal elements are used — that is, whether the stacked elements are broadside or collinear.

The arrays in Fig. 1041 are shown fed from one end, but this is not especially desirable in the case of large arrays. Better distribution of energy between elements, and hence better all-around performance, will result when the feeders are attached as nearly as possible to the center of the array. Thus in the 8-element array at A the feeders could be introduced at the middle of the transmission line between the second and third set of elements, in which case the connecting line would not be transposed. Or the antenna could be constructed with the transpositions as shown and the feeder connected between the adjacent ends of either the second or third pair of collinear elements.

A four-element array of the general type shown at B is frequently used. It is shown, with the feed point indicated, in Fig. 1042.

End-fire arrays — Fig. 1043 shows a pair of parallel half-wave elements with currents out of phase. This is known as an *end-fire* array

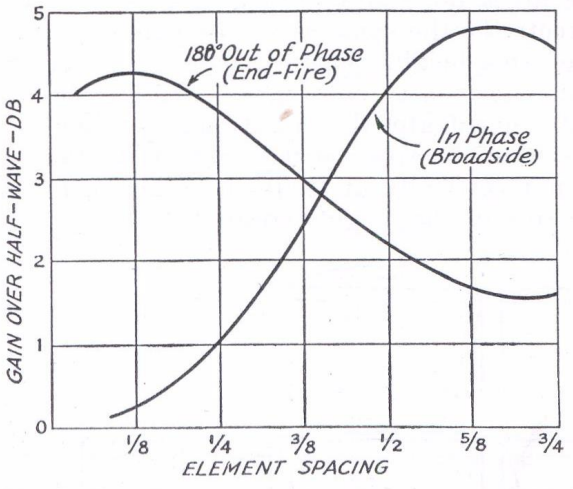

Fig. 1040 — Gain vs. spacing for two parallel half-wave elements.

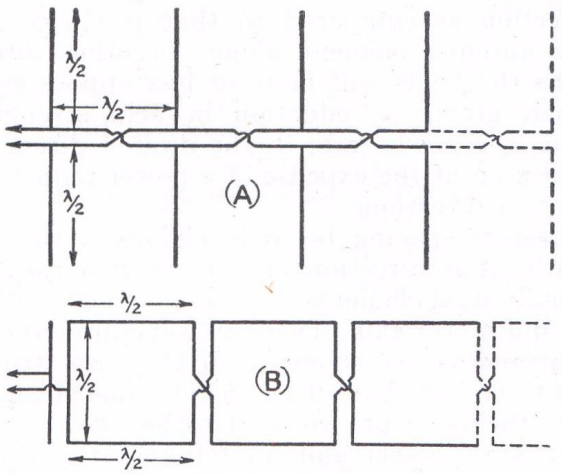

Fig. 1041 — Combination broadside and collinear arrays. A, with vertical elements; B, with horizontal elements. Both arrays give low-angle radiation. Two or more sections may be used.

The gain in db. will be equal, approximately, to the sum of the gain for one set of broadside elements (Table IV) plus the gain of one set of collinear elements (Table III). For example, in A each broadside set has four elements (gain 7 db.) and each collinear set two elements (gain 1.8 db.) giving a total gain of 8.8 db. In B each broadside set has two elements (gain 4 db.) and each collinear set three elements (gain 3.3 db.) making the total gain 7.3 db. The result is not strictly accurate because of mutual coupling between elements, but is good enough for practical purposes.

TABLE IV

THEORETICAL GAIN VS. NUMBER OF BROADSIDE ELEMENTS (HALF-WAVE SPACING)

No. of Elements	*Gain*
2	4 db.
3	5.5 db.
4	7 db.
5	8 db.
6	9 db.

because it radiates best along the line of the antennas, as shown.

The end-fire array may be used vertically or horizontally (elements at the same height) and is well adapted to amateur work because it gives maximum gain with relatively close element spacing. Fig. 1040 shows how the gain varies with spacing. End-fire elements may be combined with additional collinear and broadside elements further to increase the gain and directivity.

Either resonant or non-resonant lines may be used with this type of array, the latter being

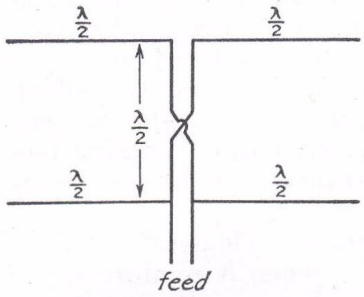

Fig. 1042 — A four-element combination broadside-collinear popularly known as the "lazy H" antenna. A closed quarter-wave stub may be used at the feed point to match into a 600-ohm line, or resonant feeders may be attached at the point shown. The gain over a half-wave antenna is 5 to 6 db.

preferably matched to the antenna through a quarter-wave matching section (§ 10-8).

Checking phasing — Figs. 1041 and 1043 illustrate a point in connection with feeding a phased antenna system which sometimes is confusing. In Fig. 1043 when the transmission line is connected as at A there is no cross-over in the line connecting the two antennas, but when the transmission line is connected to the center of the connecting line the cross-over becomes necessary (B). This is because in B the two halves of the connecting line are simply *branches* of the same line. In other words, even though the connecting line in B is a half-wave in length, it is not actually a half-wave line but *two quarter-wave lines in parallel.* The same thing is true of the untransposed line of Fig. 1041. Note that under these conditions the antenna elements are in phase when the line is not transposed, and out of phase when the transposition is made. The opposite is the case when the half-wave line simply joins two antenna elements and does not have the feed line connected to its center, as in Fig. 1039.

Adjustment of arrays — With arrays of the types just described, using half-wave spacing between elements, it will usually suffice to make the length of each element that given by the equation for a half-wave antenna in § 10-2, while the half-wave phasing

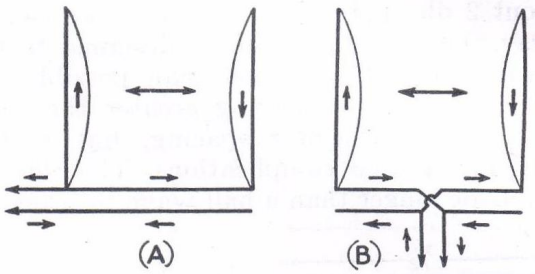

Fig. 1043 — End-fire arrays. They are shown with half-wave spacing to illustrate feeder connections. In practice, closer spacings are desirable, as shown by Fig. 1040. Direction of maximum radiation is shown by the large arrows.

lines between parallel elements can be calculated from the formula

$$\textit{Length of half-wave line (feet)} = \frac{492 \times 0.975}{\textit{Freq. (Mc.)}} = \frac{480}{\textit{Freq. (Mc.)}}$$

The spacing between elements can be made equal to the length of the phasing line. No special adjustments are needed provided the formulas are followed carefully.

With collinear arrays of the type shown in Fig. 1038-B the same formula may be used for the element length, while the quarter-wave phasing section can be calculated from Equation 7 (§ 10-5). If the array is fed at its center it will not be necessary to make any particular adjustments, although if desired the whole system may be resonated by connecting an r.f. ammeter in the shorting link on each phasing section and moving the link back and forth to find the maximum current position. This refinement is hardly necessary in practice so long as all elements are the same length and the system is symmetrical.

Simple arrays — Several simple directive antenna systems using driven elements are in rather wide use among amateurs. They are shown in Fig. 1044. Tuned feeders are assumed in all cases; however, a matching section (§ 10-8) readily can be substituted if a non-resonant transmission line is preferred. Dimensions given are in terms of wavelength; actual lengths readily can be calculated from the equations in § 10-2 for the antenna and Equation 7 (§ 10-5) for the resonant transmission line or matching section. In cases where the transmission line proper connects to the mid-point of a phasing line, only *half* the length of the latter is added to the line to find the quarter-wave point.

At A and B are two-element end-fire arrangements using close spacing. They are electrically equivalent; the only difference is in the method of connecting the feeders. B may also be used as a four-element array on the second harmonic, although the spacing is not quite optimum (Fig. 1040) in that case. A close-spaced four-element array is shown at C. It will give

about 2 db. more gain than the two-element array. The antenna at D is designed to take advantage of the greater gain possible with collinear antennas having greater than half-wave center-to-center spacing, but without introducing feed complications. The elements are made longer than a half wave to bring this about. The gain is 3 db. over a single half-wave antenna, and the broadside directivity is quite sharp.

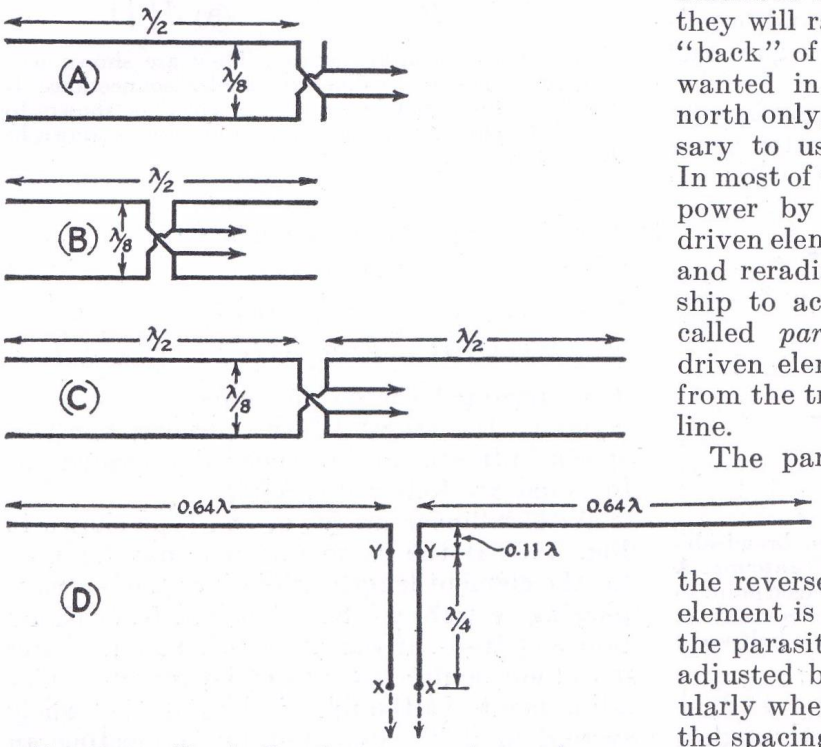

Fig. 1044 — Simple directive systems. A, two-element end-fire array; B, same with center feed, which permits use of the array on the second harmonic, where it becomes a four-element array with quarter-wave spacing C, four-element end-fire array with ⅛-wave spacing. D, extended in-phase antennas ("extended double-Zepp"). The gain of A and B is slightly over 4 db. On the second harmonic, B will give about 5 db. gain. With C, the gain is approximately 6 db., and with D, approximately 3 db.

In the first three, the phasing line contributes about 1/16th wavelength to the transmission line; when B is used on the second harmonic this contribution is ⅛ wavelength. Alternatively, the antenna ends may be bent to meet the transmission line, in which case each feeder is simply connected to one antenna. In D, points Y-Y indicate a quarter-wave point (high current) and X-X a half-wave point (high voltage). The line may be extended in multiples of quarter-waves, if resonant feeders are to be used.

A, B, and C may be suspended on wooden spreaders. The plane containing the wires should be parallel to the ground.

The antennas of A and B may be mounted either horizontally or vertically; horizontal suspension (with the two elements in a plane parallel to the ground) is recommended, since this tends to give low-angle radiation without an unduly sharp horizontal pattern. Thus these systems are useful for coverage over a wide horizontal angle. The system at C, when mounted horizontally, will have a sharper horizontal pattern than the two-element arrays.

• 10-13 DIRECTIVE ARRAYS WITH PARASITIC ELEMENTS

Parasitic excitation — The antenna arrays described in § 10-12 are bi-directional; that is, they will radiate both to the "front" and the "back" of the antenna system. If radiation is wanted in only one direction (for instance, north only, instead of north-south) it is necessary to use different element arrangements. In most of these the additional elements receive power by induction or radiation from the driven element, generally called the "antenna," and reradiate it in the proper phase relationship to achieve the desired effect. They are called *parasitic* elements, as contrasted to driven elements which receive power directly from the transmitter through the transmission line.

The parasitic element is called a *director* when it reinforces radiation on a line pointing to it from the antenna, and is called a *reflector* when the reverse is the case. Whether the parasitic element is a director or reflector depends upon the parasitic element tuning (which usually is adjusted by changing its length) and, particularly when the element is self-resonant, upon the spacing between it and the antenna.

Gain vs. spacing — The gain of an antenna-

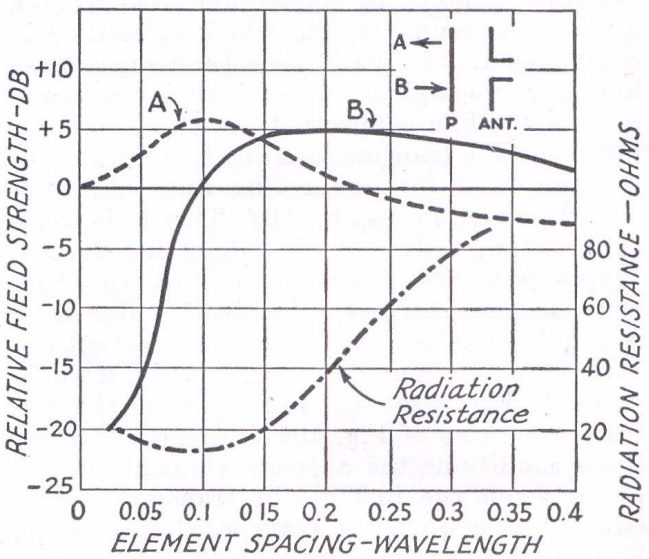

Fig. 1045 — Gain vs. element spacing for an antenna and one parasitic element. Zero db. is the field strength from a half-wave antenna alone. Greatest gain is in the direction A at spacings less than 0.14 wavelength; in direction B at greater spacings. Front-to-back ratio is the difference in db. between curves A and B. Variation in radiation resistance of the driven element also is shown. These curves are for self-resonant parasitic element. At most spacings the gain as a reflector can be increased by slight lengthening of the parasitic element; as a director, by shortening. This likewise improves the front-to-back ratio.

reflector or antenna-director combination varies chiefly with the spacing between elements. The way in which gain varies with spacing is shown in Fig. 1045, for the special case of self-resonant parasitic elements. This chart also shows how the attenuation to the "rear" varies with spacing. The same spacing does not necessarily give both maximum forward gain and maximum backward attenuation. Backward attenuation is desirable when the antenna is used for receiving, since it greatly reduces interference coming from the opposite direction to the desired signal.

Element lengths — The antenna length is given by the formulas in § 10-2. The director and reflector lengths must be determined experimentally for maximum performance. The preferable method is to aim the antenna at a receiver a mile or more distant and have an observer check the signal strength (on the "S" meter) while the reflector or director is adjusted a few inches at a time, until the length which gives maximum signal is found. The attenuation may be similarly checked, the length being adjusted for minimum signal. In general, the length of a director will be about 4% less than that of the antenna, for best front-to-back ratio. The reflector will be about 5% longer than the antenna.

Simple systems — the rotary beam — Practical combinations of antenna, reflector and director are shown in Fig. 1046. Spacings for maximum gain or maximum front-to-back ratio (ratio of power radiated in the desired direction to power radiated in the opposite direction) may be taken from Fig. 1045. In the chart, the front-to-back ratio in db. will be the sum of gain and attenuation at the same spacing.

Systems of this type are popular for rotary beam antennas, where the whole antenna is rotated to permit its gain and directivity to be utilized for any compass direction. They may be mounted either horizontally (plane containing the elements parallel to the earth) or vertically.

Arrays using more than one parasitic element, such as those shown at C and D in Fig. 1046, will give more gain and directivity than is indicated for the single reflector and director by the curves of Fig. 1045. The gain with a properly adjusted three-element array (antenna, director and reflector) will be 5 to 7 db. over a half-wave antenna, while somewhat higher gain still can be secured by adding a second director to make a four-element array. The front-to-back ratio is correspondingly improved as the number of elements is increased.

The elements in close-spaced (less than one-quarter wavelength element spacing) arrays preferably should be made of tubing of half-

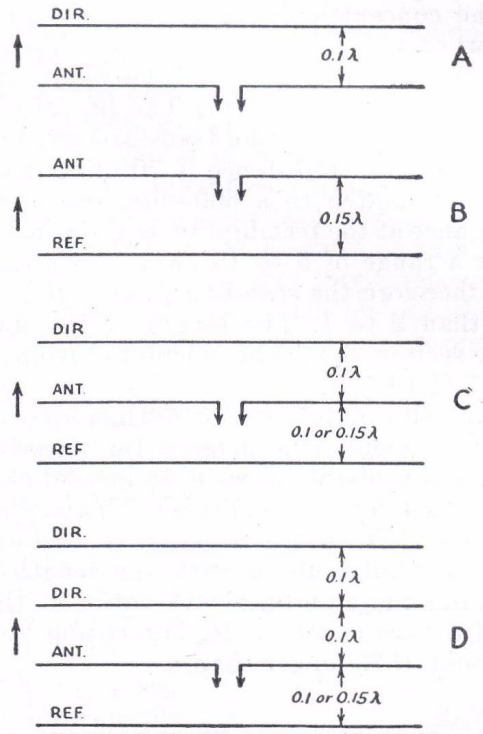

Fig. 1046 — **Half-wave antennas with parasitic elements. A, with reflector; B, with director; C, with both director and reflector; D, two directors and one reflector. Gain is approximately as shown by Fig. 1045 in the first two cases and depends upon the spacing and length of the parasitic element. In the three- and four-element arrays a reflector spacing of 0.15 wavelength will give slightly more gain than 0.1-wavelength spacing. Arrows show direction of maximum radiation. The array should be mounted horizontally (these are top views).**

to one-inch diameter both to reduce the ohmic resistance (§ 10-2) and to secure mechanical rigidity. If the elements are free to move with respect to each other the array will show detuning effects in a wind.

Feeding close-spaced arrays — While any of the usual methods of feed may be applied to the driven element of a parasitic array, the fact that with close spacing the radiation resistance as measured at the center of the driven element drops to a very low value makes some systems more desirable than others. The preferred methods are shown in Fig. 1047. Resonant feeders are not recommended for lengths greater than a half wavelength.

The quarter- or half-wave matching stubs shown at A and B in Fig. 1047 preferably should be constructed of tubing with rather close spacing, in the manner of the "Q" section. This lowers the impedance of the matching section and makes the position of the line taps somewhat less difficult to determine accurately. This line adjustment should be made only with the parasitic elements in place, and after the correct element lengths have been determined should be checked to compensate for changes likely to occur because of element tuning. The procedure is the same as that described in § 10-8.

The concentric-line matching section at C will work with fair accuracy into a close-spaced parasitic array of 2, 3 or 4 elements without necessity for adjustment. The line is used as an impedance inverting transformer, and if its characteristic impedance is 70 ohms will give an exact match to a 600-ohm line when the resistance at the termination is about 8.5 ohms. Over a range of 5 to 15 ohms the mismatch, and therefore the standing-wave ratio, will be less than 2 to 1. The length of the quarter-wave section should be calculated from Equation 7 (§ 10-5).

The delta matching transformer shown at D is an excellent arrangement for parasitic arrays, and probably is easier to install, mechanically, than any of the others. The positions of the taps (dimension *a*) must be determined experimentally, along with the length *b*, by checking the standing-wave ratio on the line as adjustments are made. Dimension *b* should be about 15% longer than *a*.

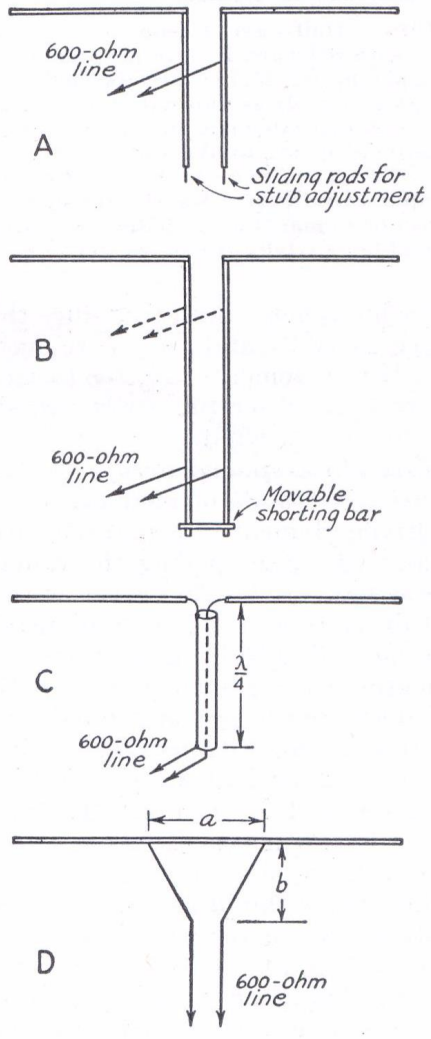

Fig. 1047 — Recommended methods of feeding the driven antenna element in close-spaced parasitic arrays. The parasitic elements are not shown. A, quarter-wave open stub; B, half-wave closed stub; C, concentric-line quarter-wave matching section; D, delta matching transformer.

Sharpness of resonance — Peak performance of a multi-element directive array depends upon proper phasing or tuning of the elements, which in all but the simplest systems can be exact for one frequency only. However, there is some latitude, and most arrays will work well over a relatively narrow band such as 14 Mc. If frequencies in all parts of the band are to be used, the antenna system should be designed for the mid-frequency; on the other hand, if only one frequency in the band will be used the greater portion of the time the antenna might be designed for that frequency and some degree of misadjustment tolerated on the occasionally-used spare frequencies.

When reflectors or directors are used the tolerance is usually less than in the case of driven elements, partly because the parasitic-element lengths are fixed and the operation may change appreciably as the frequency passes from one side of resonance to the other, and partly because the close spacing ordinarily used results in a sharp-tuning system. With parasitic elements operation should be confined to a small region about the frequency for which the antenna is adjusted, if peak performance is to be secured.

Combination arrays — It is possible to combine parasitic elements with driven elements to form arrays composed of collinear driven and parasitic elements and combination broadside-collinear-parasitic elements. Thus two or more collinear elements might be provided with a collinear reflector or director set, one parasitic element to each driven element. Or both directors and reflectors might be used. A broadside-collinear array could be treated in the same fashion.

When combination arrays are built up, a rough approximation of the gain to be expected may be obtained by adding the gains for each type of combination. Thus the gain of two broadside sets of four collinear arrays with a set of reflectors, one behind each element, at quarter-wave spacing for the parasitic elements, would be estimated as follows: From Table III, the gain of four collinear elements is 4.5 db. with half-wave spacing; from Fig. 1040 or Table IV, the gain of two broadside elements at half-wave spacing is 4.0 db.; from Fig. 1045 the gain of a parasitic reflector at quarter-wave spacing is 4.5 db.; the total gain is then the sum, or 13 db. for the sixteen elements. Note that using two *sets* of elements in broadside is equivalent to using two elements, so far as gain is concerned, similarly with sets of reflectors as against one antenna and one reflector. The actual gain of the combination array will depend, in practice, upon the way in which the power is distributed between the various elements, and upon the effect of mutual coupling between elements upon the

radiation resistance of the array, and may be somewhat higher or lower than the estimate.

A great many directive antenna combinations can be worked out by combining elements according to these principles.

•10-14 MISCELLANEOUS ANTENNA SYSTEMS

Grounded antenna — The grounded antenna is used almost exclusively for 1.75-Mc. work, where the length required for a half-wave antenna would be excessive for most locations. An antenna worked "against ground" need be only a quarter-wave long, approximately, because the earth acts as an electrical "mirror" which supplies the missing quarter wave. The current at the ground connection with a quarter-wave antenna is maximum, just as it is at the center of a half-wave antenna.

On 1.75 Mc. the most useful radiation is from the vertical part of the antenna, since vertically-polarized waves are characteristic of ground-wave transmission. It is therefore desirable to make the down-lead as nearly vertical as possible, and also as high as possible. This gives low-angle sky-wave transmission which is most useful for long-distance work at night, in addition to a good ground wave for local work. The horizontal portion contributes to high-angle sky-wave transmission, which is useful for covering short distances on this band at night.

Fig. 1048 shows a grounded antenna with the top folded to make the length equal to a quarter wave. The antenna coupling apparatus consists of the coil L, tuned by the series condenser C, with L inductively coupled to the transmitter tank circuit (§ 10-4, 10-6).

For computation purposes, the *overall* length of a grounded system is given by

$$L\ (feet) = \frac{236}{f\ (Mc.)}$$

This is the *total* length from the far end of the antenna to the ground connection. The length is not critical, since departures of the order of 10% to 20% can be compensated by the tuning apparatus.

The ground should preferably be one with conductors buried deep enough to reach natural moisture. In urban locations, good grounds can be made to water mains where they enter the house; the pipe should be scraped clean and a low-resistance connection made with a tightly-fastened ground clamp. If no water-pipes are available several pipes, six to eight feet long, may be driven into the ground at intervals of six or eight feet, all being connected together. The transmitter should be located so as to make the ground lead as short as possible.

In locations where it is impossible to secure a good ground connection because of sandy soil or other considerations, it is preferable to use a counterpoise or capacity ground instead of an actual ground connection. The counterpoise consists of a system of wires insulated from ground running horizontally above the earth beneath the antenna. The counterpoise should have a sufficient number of wires of sufficient length to cover well the area immediately under the antenna. The wires may be formed into any convenient shape, i.e., they may be spread out fan-shape, in a radial pattern, or three or more parallel wires separated a few feet running beneath the antenna may be used. The counterpoise should be elevated six or seven feet above the ground so it will not interfere with persons walking under it. Connection is made between the usual ground terminal of the transmitter and each of the wires in the counterpoise.

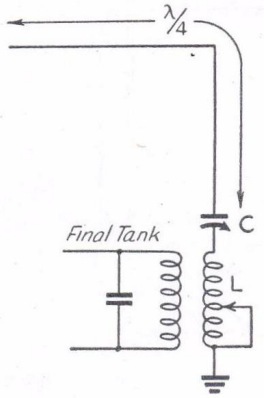

Fig. 1048 — Typical grounded antenna for 1.75 Mc., consisting of a vertical section and horizontal section having a total length (including the ground lead if the latter is more than a few feet long) of one-quarter wavelength. Coil L should have about 20 turns of No. 12 on a three-inch diameter form, tapped every two or three turns for adjustment. C is 250 to 500 $\mu\mu fd.$ variable. The inductive coupling between L and the final tank coil should be variable.

"J" antenna — This antenna, frequently used on ultra-high frequencies when vertical polarization is desired, is simply a half-wave radiator fed through a quarter-wave matching section, (§ 10-8), the whole being mounted vertically as shown in Fig. 1049. Adjustment and tuning are as described in § 10-8. The bottom of the matching section, being practically at zero r.f. potential, can be grounded through a metallic conductor for lightning protection.

Coaxial antenna — With the "J" antenna there is likely to be some radiation from the matching section and transmission line which tends to combine with the radiation from the antenna in such a way as to raise the angle of radiation. As this is undesirable on ultra-high frequencies where the lowest possible radiation angle is essential, the coaxial antenna shown in Fig. 1050 was developed to eliminate feeder radiation. The center conductor of a 70-ohm concentric transmission line is extended one quarter wave beyond the end of the line to act as the upper half of a half-wave antenna, the lower half being supplied by the quarter-wave sleeve, the upper end of which is connected to the outer conductor of the concen-

tric line. The sleeve acts as a shield about the transmission line and very little current is induced on the outside of the line by the antenna field. The line is non-resonant, since its characteristic impedance is the same as the center impedance of the half-wave antenna

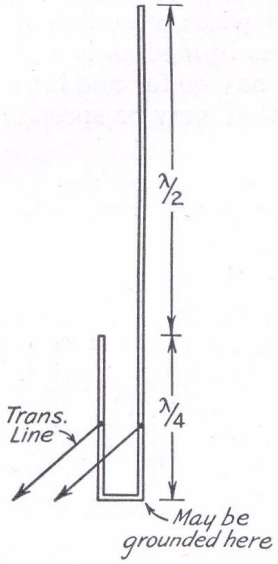

Fig. 1049 — The "J" antenna. It is usually constructed of metal tubing; frequently with the ¾-wave vertical section shown an extension of a grounded metal mast. The stub may be adjusted by a sliding shorting bar.

(§ 10-2). The sleeve may be made of copper or brass tubing of suitable diameter to clear the transmission line. The coaxial antenna is somewhat difficult to construct, but is superior to simpler systems at low radiation angles.

Folded dipole — An arrangement which combines the radiation characteristics of a half-wave antenna with the impedance-transforming properties of a quarter-wave line

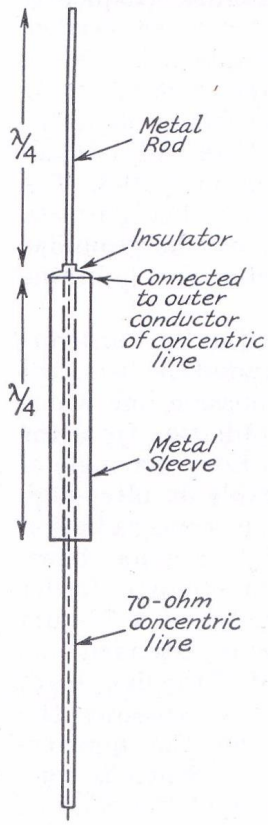

Fig. 1050 — Coaxial antenna. The inner conductor of the 70-ohm line is connected to the quarter-wave metal rod which forms the upper half of the antenna.

(§ 10-5) is shown in Fig. 1051. Essentially, it consists of a center-fed half-wave antenna with another half-wave element connected directly between its ends. The spacing between the two sections should be quite close — not more than a few per cent of the wavelength. As used at ultra-high frequencies, the spacing is of the order of an inch or two with elements constructed of metal tubing.

The impedance at the terminals of the antenna is four times that of a half-wave antenna, or nearly 300 ohms, when the antenna conductors are all the same diameter. A 300-ohm line will therefore be non-resonant when the antenna is connected to its output end (§ 10-5), while the standing-wave ratio with a 600-ohm line will be only 2 to 1.

The total length around the loop formed by the antenna may be calculated by Equation 10 (§ 10-9) for a total length of one wavelength.

Corner reflector antenna — A type of antenna system particularly well-suited to the u.h.f. ranges above 56 Mc., is the "corner" reflector shown in Fig. 1052. It consists of two plane surfaces set at an angle of 90°, with the antenna set on a line bisecting this angle.

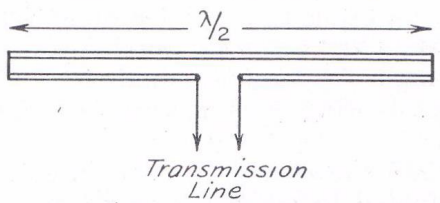

Fig. 1051 — Folded dipole for increasing the value of impedance at the feed point.

The distance of the antenna from the vertex should be 0.5 wavelength, but some compromise designs can be built with closer spacings (see Table V). The plane surfaces do not need to be solid, and can most easily be made of spines spaced about 0.1 wavelength apart. The spines do not have to be connected together electrically.

The resistance of the antenna is raised when a corner reflector is used. The transmission line should be run out at the rear of the reflector to keep the system as symmetrical as possible and thus avoid any unbalance. Two simple antennas which can be used with the corner reflector are shown in Fig. 1053.

The corner reflector can be used with the antenna either horizontal or vertical, and the plane of polarization will be the plane of the antenna. The relative positions of the antenna and reflector must remain the same, however, which means that a support for both horizontal and vertical polarization would require a means for rotating the reflector about its horizontal axis.

Receiving antennas — Because of the high sensitivity of modern receivers a large antenna

is not necessary for picking up signals at good strength. Often it will be found that an indoor wire only 15 or 20 feet long will give quite good results, although a longer wire outdoors is better.

The use of a tuned antenna greatly improves the operation of the receiver because the signal

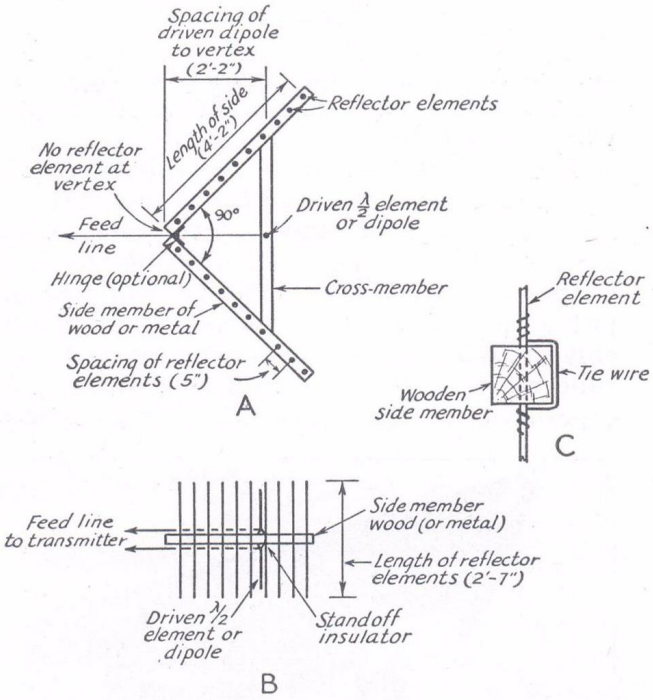

Fig. 1052 — **A corner reflector antenna system with grid-type reflector. The reflector elements are stiff wire or tubing. The dimensions are for 224 Mc., and should be doubled for 112 Mc. (See Table V.) The gain of the system is close to 10 db.**

strength is greater in proportion to the stray noises picked up by the antenna than is the case with the antenna of random length. Since the transmitting antenna is usually given the best location, it can be used to great advantage for receiving, especially when a directive antenna is used. A change-over switch or relay connected in the antenna leads can be used to transfer the connection from

TABLE V

Frequency Band	Length of Side	Length of Reflector Elements	Number of Reflector Elements	Spacing of Reflector Elements	Spacing of Driven Dipole to Vertex
224–230 Mc. (1¼ meter)	4′ 2″	4′ 7″	20	5″	2′ 2″
112–116 Mc. (2½ meter)	8′ 4″	5′ 2″	20	10″	4′ 4″
112–116 Mc.* (2½ meter)	6′ 8″	5′ 2″	16	10″	3′ 6″
56–60 Mc. (5 meter)	16′ 8″	10′ 4″	20	1′ 8″	8′ 8″
56–60 Mc.* (5 meter)	13′ 4″	10′ 4″	16	1′ 8″	6′ 11″

Table V. — **Dimensions of square-corner reflector for the 224-, 112-, and 56-Mc. bands. Alternative designs are listed for the 112- and 56-Mc. bands. These designs, marked (*), have fewer reflector elements and shorter sides, but the effectiveness is only slightly reduced. There is no reflector element at the vertex in any of the designs.**

the receiver to the transmitter while the transmitter is on the air. The directive effects and power gain of directive transmitting antennas are the same for receiving as for transmitting, and should be utilized for best reception.

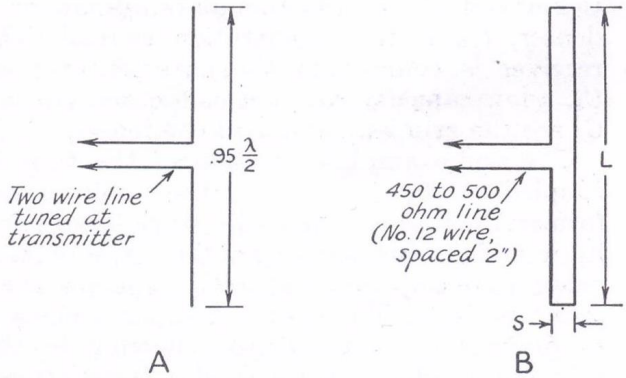

Fig. 1053 — **Dipoles suitable for use with the corner reflector antenna system. The length *L* is 25 inches for 224 Mc., *s* = 1 inch for the same band.**

CHAPTER ELEVEN

Receiver Construction

• A ONE-TUBE REGENERATIVE RECEIVER

THE SIMPLEST receiver capable of giving at all satisfactory results in everyday operation is one consisting of a regenerative detector followed by an audio amplifier. This type of receiver is sufficient for headphone reception, and is quite easy to build and adjust. A dual tube may be used for both stages, thereby reducing cost.

Figs. 1101 to 1105 show such a receiver, using a 6C8G twin-triode tube, one triode section being the regenerative detector and the other the audio amplifier. The circuit diagram is given in Fig. 1103. The grid coil, L_1, is tuned to the frequency of the incoming signal by means of condensers C_1 and C_3, C_1 being the bandsetting or general coverage condenser and C_3 the bandspread condenser. Regeneration is supplied by means of the tickler coil L_2; the variable plate by-pass condenser, C_2, is the regeneration control. The receiver is coupled to the antenna through C_5, a low-capacity trimmer condenser. R_1 and C_4 are the grid leak and grid condenser.

The audio amplifier section of the tube is coupled to the detector by the audio transformer T_1. Bias for the audio stage is supplied by a midget flashlight cell, this type of bias being quite convenient as well as cheaper than other methods. The choke, *RFC*, is necessary to prevent r.f. current from flowing in the primary winding of the audio transformer; without the choke the regeneration control condenser C_2 may be ineffective. A switch, S_1, is provided for turning off the "B" supply when transmitting.

This receiver is laid out so that it can be converted into the two-tube superhet described in the next section, using most of the same parts over again and utilizing the same chassis and panel. The superhet will give improved performance, but is a little more difficult to build and adjust. By building the one-tube receiver first, the beginner will acquire experience in the operation of regenerative

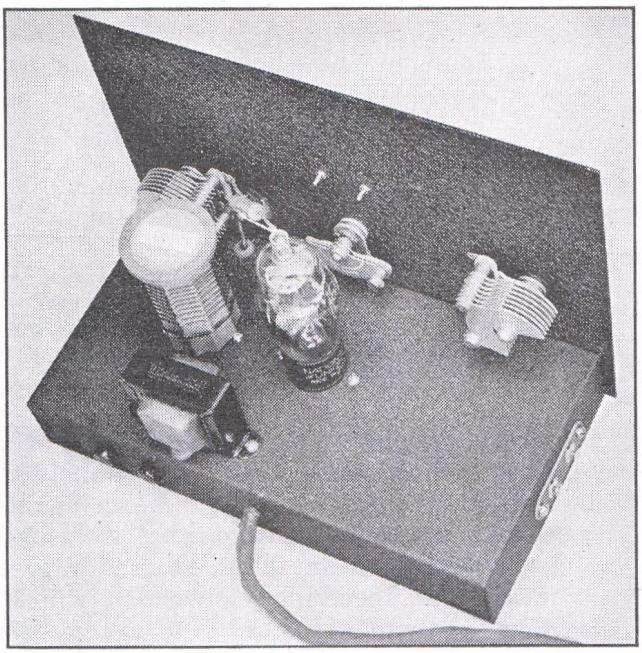

Fig. 1102 — A rear view of the one-tube regenerative receiver. The grid condenser and grid leak are supported by their wire leads between the stator plates of the tuning condenser and the grip cap on the tube.

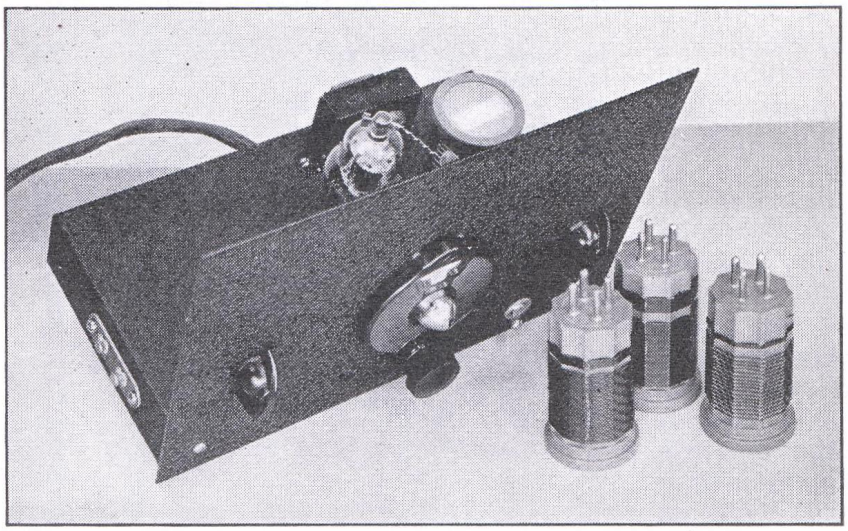

Fig. 1101 — A one-tube regenerative receiver, using a double triode as a regenerative detector and audio amplifier.

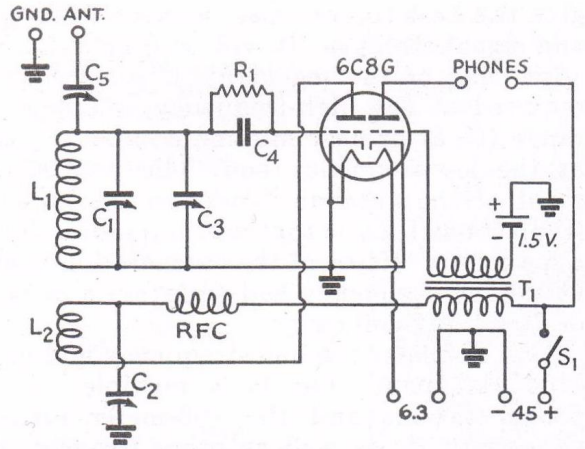

Fig. 1103 — Circuit diagram of the one-tube regenerative receiver.
C_1, C_2 — 100-$\mu\mu$fd. variable (Hammarlund SM-100).
C_3 — 15-$\mu\mu$fd. variable (Hammarlund SM-15).
C_4 — 100-$\mu\mu$fd. mica.
C_5 — 3–30-$\mu\mu$fd. mica trimmer (National M-30).
R_1 — 1 megohm, ½ watt.
L_1, L_2 — See coil table.
T_1 — Audio transformer, interstage type, 3:1 ratio (Thordarson T13A34).
S_1 — S.p.s.t. toggle switch.
RFC — 2.5-mh. r.f. choke.

circuits which will be helpful in building and using the two-tube receiver.

The construction of the receiver is shown in the photographs. The chassis measures 5½ by 9½ by 1½ inches. The three variable condensers are mounted on the panel three inches from the bottom edge, with C_3 in the center, C_1 at the right and C_2 at the left. The condensers are 3½ inches apart, center to center. The tube socket is directly behind C_3, its center being 2¼ inches from the panel; the coil socket is 2½ inches to the right. The audio transformer is mounted along the rear chassis edge as shown. All ground connections may be made directly to the chassis, making sure that the paint is scraped away and that good contact is secured.

The wiring underneath the chassis is very simple. In the photograph, Fig. 1104, the antenna connection strip is at the left, with C_5 supported by the wiring to the antenna post. The ground connection is soldered to a lug under the nut holding the connection strip in place. The choke *RFC* also is supported by the wiring. The bias battery (the zinc can is the negative terminal) is soldered to a lug strip as shown. The headphone connections are made by means of tip jacks mounted on the rear edge of the chassis. Filament and plate power are brought in through a four-wire cable which enters the chassis through the rear edge.

The coils are made as shown in Fig. 1105 and the coil table. Both windings should be in the same direction. Using the standard pin numbering for four prong sockets, pin 1 connects to ground, pin 2 to the plate of the detector, pin 3 to *RFC* and the stator plates of C_2, and pin 4 to the stator plates of C_1 and C_3. L_1 for the B, C and D coils should have its turns evenly spaced to occupy the specified length; the wire may be held in place when the coil is finished by running some Duco cement along the ridges of the coil forms. Be sure to clean any excess soldering flux from the coil pins after the wires are soldered in place; rosin flux in particular will form a thin insulating film over the pins and prevent contact when the coil form is inserted in the socket.

The heater supply for the receiver may be either a 6.3-volt filament transformer (the 1-ampere size will be ample) or a 6-volt battery. A 45-volt "B" battery should be used for the plate supply. The "B" current drain is only a few milliamperes, and a medium- or small-size "B" battery will give excellent service.

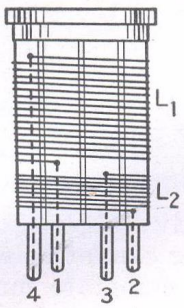

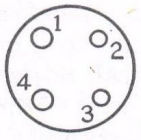

BOTTOM OF SOCKET OR COIL FORM

Fig. 1105 — Method of winding coils for the one-tube regenerative receiver.

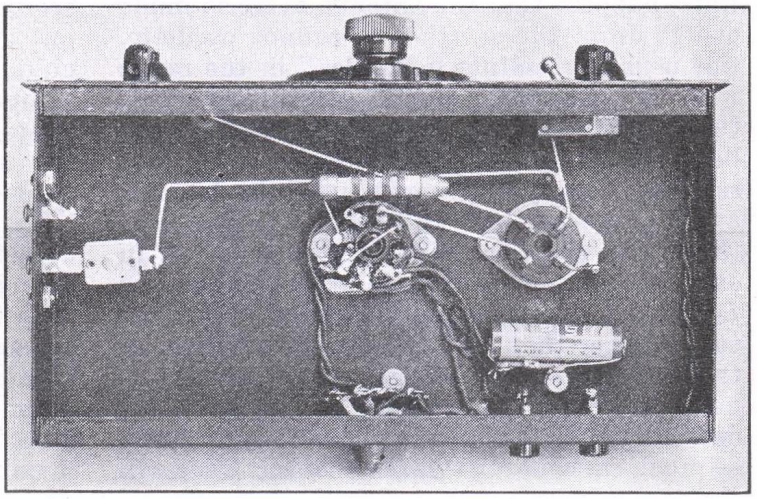

Fig. 1104 — Bottom of chassis view of the one-tube regenerative receiver. Construction and wiring are extremely simple.

ONE-TUBE REGENERATIVE RECEIVER COIL DATA

Coil	Grid Winding (L_1)	Tickler (L_2)
A	56 turns No. 22 enamelled	15 turns No. 24 enamelled
B	32 " " " "	8 " " " "
C	18 " " " "	5 " " " "
D	10 " " " "	5 " " " "

All coils wound on 1½-inch diameter forms (Hammarlund SWF-4). Grid windings on coils B, C and D spaced to occupy a length of 1½ inches; grid winding on coil A close-wound. Tickler coils all close-wound, spaced ⅛ inch from bottom of grid winding. See Fig. 1105

Frequency range: Coil A — 1700 to 3200 kc.
B — 3000 to 5700 kc.
C — 5400 to 10,000 kc.
D — 9500 to 18,000 kc.

After the set is completed and the wiring checked to make sure that it is exactly as shown, insert the C coil (selected because signals can usually be heard in this range at any time of the day or night) in the coil socket and connect the headphones, antenna and ground, and the heater supply. After the heater supply has been connected for a few minutes, the tube should feel warm to the touch and there should be a visible glow from the heater. The "B" battery can now be connected and the switch, S_1, closed.

Now turn the regeneration condenser, C_2, starting from minimum capacity (plates all out) until the set goes into oscillation. This phenomenon is easily recognizable by a distinct click, thud or hissing sound. The point where oscillation just begins is the most sensitive operating point at that particular dial setting.

The tuning dial may now be slowly turned, the regeneration control knob being varied simultaneously (if necessary) to keep the set just oscillating. A number of stations will probably be heard. A little practice will make tuning easy.

If the set refuses to oscillate, the sensitivity will be poor and no code signals will be heard on the frequencies at which such signals should be expected. It should oscillate easily, however, if the coils are made exactly as shown. It sometimes happens that the antenna takes so much energy from the set that it cannot oscillate, this usually resulting in "holes" in the range where no signals can be picked up (and where the hissing sound cannot be obtained). This can be cured by reducing the capacity of C_5 (unscrewing the adjusting screw) until the detector again oscillates. If it still refuses to oscillate, the coil L_2 must be moved nearer to L_1 or, in extreme cases, a turn or two must be added to L_2. This is best done by rewinding with more turns rather than by trying to add a turn or two to the already-wound coil. For any given band of frequencies, adjust C_5 so that the detector oscillates over the whole range, using as much capacity at C_5 as is possible. This will give the best compromise between dead spots and signal strength. It will be found that less advancing of the regeneration control, C_2, is required at the high-frequency end of a coil range (C_1 at or near minimum capacity) than at the low-frequency end. The best adjustment of the antenna condenser, C_5, and the feedback coil, L_2, is that which requires almost a maximum setting of the regeneration control at the low-frequency end (maximum capacity of C_1) of any coil range.

Coil A misses the high-frequency end of the broadcast band, but it is possible to hear police stations and the 160-meter amateur band with it, as well as other services. The amateur band is most easily located by listening at night (when there is the most activity), setting C_3 at maximum and slowly tuning with C_1 until some of the police stations are heard. These stations operate on 1712 kc., so that once found they become "markers" for the low-frequency end of the band. Further tuning then should be done with the main tuning dial, and many amateur stations should be heard.

Locating the amateur bands on the other coils is done in much the same manner, by searching carefully with C_1. The 3.5–4.0-Mc. amateur band will be found on coil B at about 80% setting of C_1; it will be easiest to locate this band by setting C_3 at minimum capacity (plates unmeshed) and adjusting C_1 until amateur 'phone stations are heard. Again this is best done at night, when the activity is heaviest on this band. On coil C, the 7-Mc. amateur band will be found with C_1 meshed about 60%; the 14-Mc. band (coil D) is found with C_1 meshed about 20%.

A suitable antenna for the receiver would be 50 to 75 feet long, and as high and clear of surrounding objects as possible. The ground lead should preferably be short; a ground to a heating radiator or water piping is usually good.

• A TWO-TUBE SUPERHET RECEIVER

Although all the advantages of the superheterodyne type receiver cannot be secured without going to rather elaborate multi-tube circuits, it is possible to use the superhet principle to overcome most of the disadvantages of the simple regenerative receiver. These are chiefly the necessity for critical adjustment of the regeneration control with tuning, antenna "dead spots," lack of stability (both in the detector circuit itself and because of slight changes in frequency when the antenna swings with the wind), and blocking, or the tendency for strong signals to pull the detector into zero beat. These effects can be largely eliminated by making the regenerative detector operate on a fixed low frequency and designing it for maximum stability. The incoming signal is

Fig. 1106 — This two-tube superhet has one more control than the ordinary regenerative receiver, but is more stable and easier to tune.

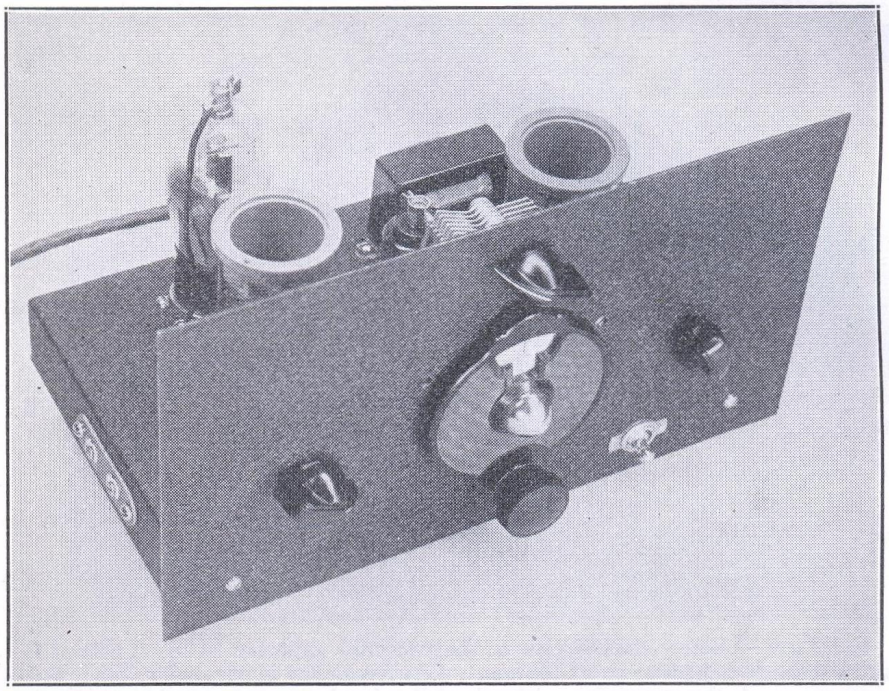

Fig. 1107 — A back-of-panel view of the two-tube superhet, showing the arrangement of parts on top of the 5½- by 9½- by 1½-inch chassis.

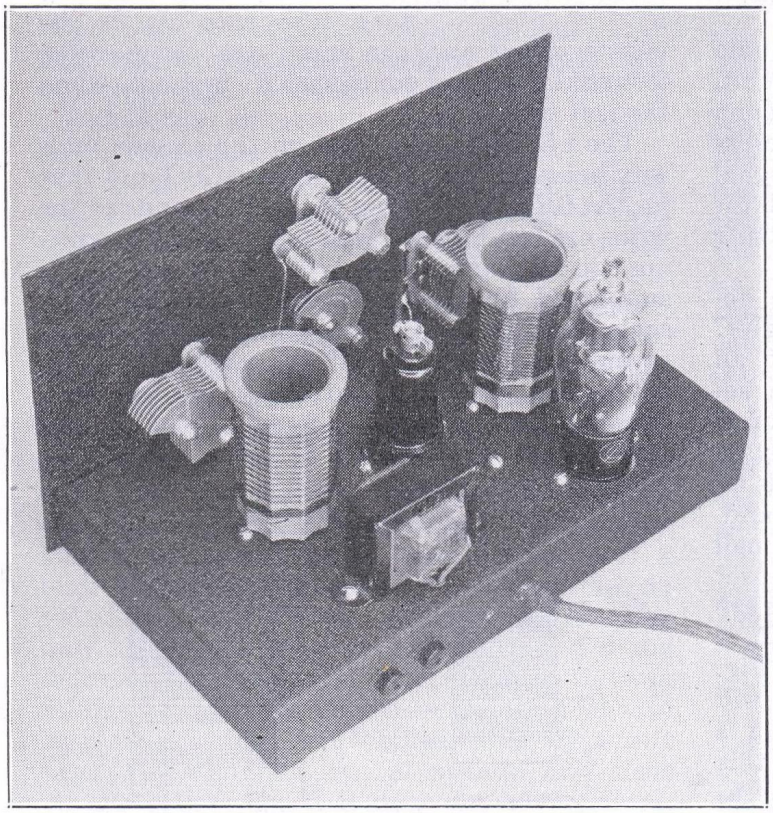

Fig. 1108 — Circuit diagram of the two-tube superhet.

C_1, C_2, C_3 — 100-$\mu\mu$fd. variable (Hammarlund SM-100).
C_4 — 15-$\mu\mu$fd. variable (Hammarlund SM-15).
C_5 — 250-$\mu\mu$fd. silvered mica (Dubilier Type 5-R).
C_6 — 0.01-μfd. paper. R_1 — 50,000 ohms, ½ watt.
C_7 — 0.005-μfd. mica. R_2 — 1 megohm, ½ watt.
C_8, C_9 — 100-$\mu\mu$fd. mica. RFC — 2.5-mh. r.f. choke.
T_1 — Audio transformer, interstage type, 3:1 ratio (Thordarson T13A34).
L_1–L_4, inc. — See coil table.
L_5 — 55 turns No. 30 d.s.c., close-wound on ¾-inch diameter form (National PRF-2); inductance 40 microhenrys.
L_6 — 18 turns No. 30 d.s.c., close-wound, on same form as L_5; see Fig. 2.
S — S.p.s.t. toggle switch.

then converted to the fixed detector frequency before being detected.

A two-tube receiver operating on this principle is shown in Figs. 1106 to 1110. It employs the same chassis and panel, as well as most of the parts, of the one-tube regenerative receiver just described, with the addition of a converter tube and its associated circuits. The same coils may also be used, with a new winding and rearrangement of the pin connections for L_2; the windings and connections for L_1 need not be changed. One additional coil is needed to cover a frequency range of 1700 to 14,500 kc. including the four lower-frequency amateur bands.

The circuit diagram is given in Fig. 1108. A 6K8 is used to convert the frequency of the incoming signal to the fixed or intermediate frequency, and the two triode sections of a 6C8G

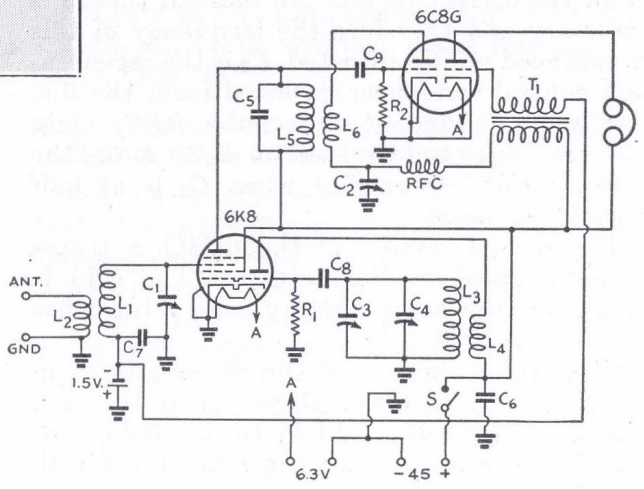

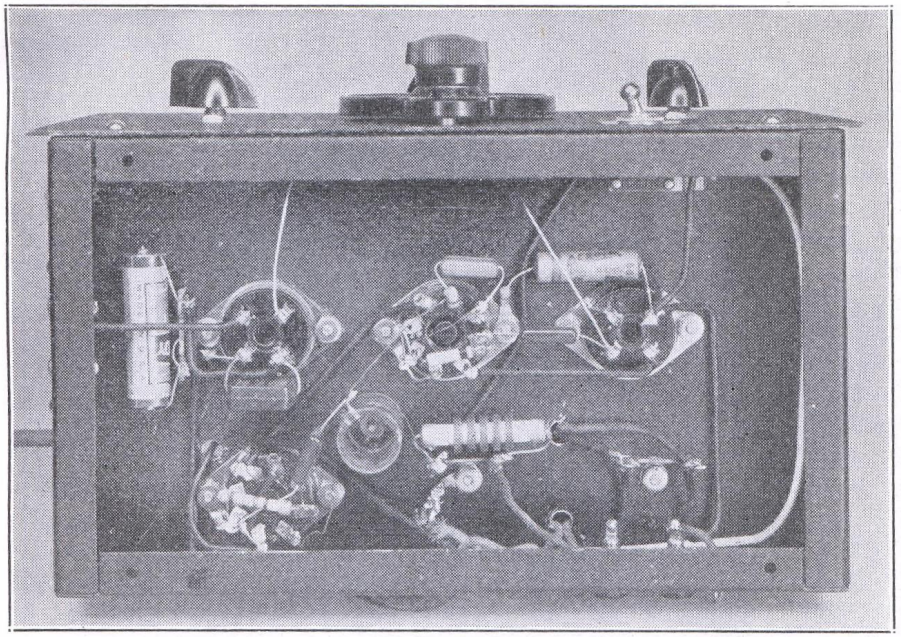

Fig. 1109 — Below-chassis view of the two-tube superhet. The i.f. circuit is underneath the chassis; no adjustment of its frequency is necessary. Since few parts are used, the remaining wiring is quite simple.

serve as the regenerative detector and audio amplifier respectively. L_1C_1 is the r.f. circuit, tuned to the signal, and L_2 is the antenna coupling coil. C_7 is a by-pass condenser across the 1.5-volt battery used to bias the signal grid of the 6K8. The high-frequency oscillator tank circuit is $L_3C_3C_4$, with C_3 for band-setting and C_4 for band-spread.

The i.f. tuned circuit (or regenerative detector circuit) is L_5C_5. This must be a high-C circuit if stability better than that of an ordinary regenerative detector is to be secured. The frequency to which it is tuned should be in the vicinity of 1600 kc.; the exact frequency does not matter so long as it falls on the low-frequency side of the 1750-kc. band. L_5 and its tickler coil L_6 are wound on a small form, and L_5 is tuned by a fixed mica condenser of the low-drift type. Since these condensers are furnished within a capacity tolerance of 5%, it is sufficient to wind L_5 as specified under Fig. 1108 and the resulting resonant frequency will be in the correct region. No manual tuning is necessary and therefore the frequency of this circuit need not be adjusted. C_2 is the regeneration control condenser, isolated from the d.c. supply by means of the choke *RFC*. Only enough turns need be used on L_6 to make the detector oscillate readily when C_2 is at half capacity or more.

The second section of the 6C8G is transformer-coupled to the detector. The grid is biased by the same battery which furnishes bias for the 6K8.

Looking at the top of the chassis, from in front, the r.f. or input circuit is at the left, with C_1 on the panel and L_1-L_2 just behind it. The 6C8G is directly to the rear of the coil. The 6K8 converter tube is centered on the chassis, with C_3 and C_4 on the panel directly in front of it. C_4 is driven by the vernier dial and C_3 is toward the top of the panel. The coil at the right is L_3-L_4, in the oscillator tuned circuit. The regeneration-control condenser, C_2, is at the right on the panel. The audio transformer, T_1, is behind the oscillator coil.

Looking at the bottom of the chassis, the antenna-ground terminals are at the left, with a lead going directly to L_2 on the coil socket. The bias battery is fastened to a two-lug insulating strip by means of wires soldered to the battery. The zinc can is the negative end and the small cap the positive terminal. By-pass condenser C_7 is mounted on the coil socket.

The i.f. coil is mounted on the chassis midway between the socket for the 6C8G and that for the 6K8. In winding the coil the ends of the wires are left long enough to reach to the various tie-in points. The grid condenser, C_9, is supported by the grid terminal on the tube socket and the end of the grid winding, L_5. R_2 is mounted over the 6C8G socket. The i.f. condenser, C_5, is mounted by its terminals between the plate and screen prongs on the 6K8 socket, the ends of L_5 being brought to the same two points.

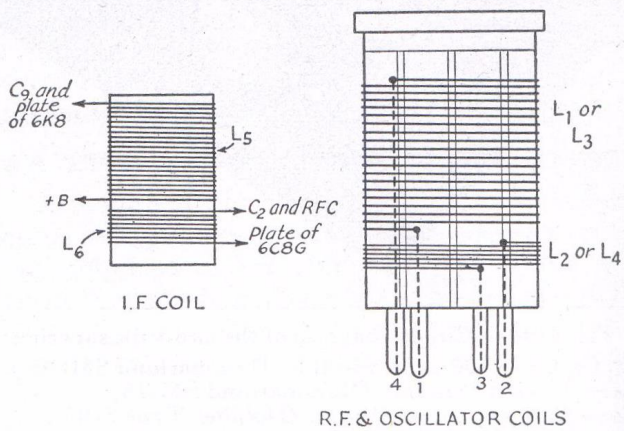

Fig. 1110 — How the coils for the two-tube super are wound. The bottom end of the i.f. coil in this drawing is the end mounted to the chassis. L_5 and L_6 are wound in the same direction.

Both windings are in the same direction on each r.f. and oscillator coil. On the r.f. socket, pin 4 connects to the No. 3 grid (top cap) of the 6K8 and stator of C_1, pin 1 to C_7, pin 2 to ground and pin 3 to the antenna post. On the oscillator socket, pin 4 goes to C_8 and the stators of C_3 and C_4, pin 1 to ground, pin 2 to "B" plus, and pin 3 to the 6K8 oscillator section plate.

TWO-TUBE SUPERHET COIL DATA

Coil	*Grid Winding (L_1 and L_3)*	*Antenna (L_2) or Tickler (L_4)*
A	56 turns No. 22 enamelled	10 turns No. 24 enamelled
B	32 " " " "	8 " " " "
C	18 " " " "	7 " " " "
D	12 " " " "	7 " " " "
E	10 " " " "	8 " " " "

All coils wound on 1½-inch diameter forms (Hammarlund SWF-4). Grid windings on coils B-E, inc., spaced to occupy a length of 1½ inches; grid winding on coil A close-wound. Antenna-tickler coils all close-wound, spaced ⅛ inch from bottom of grid winding. See Fig. 1110.

Frequency Range	*Coil at L_1-L_2*	*Coil at L_3-L_4*
1700 to 3200 kc.	A	B
3000 to 5700 kc.	B	C
5400 to 10,000 kc.	C	D
9500 to 14,500 kc.	E	D

The oscillator grid condenser, C_8, is connected between the coil socket prong and the oscillator grid prong on the 6K8 socket. By-pass condenser C_6 is mounted alongside the oscillator coil socket as shown. The connections to the rotors of the tuning condensers for both coils go through holes in the chassis near the front edge. Grounds are made directly to the chassis in all cases; make sure that there is an actual connection to the metal.

The "B" switch is a single-pole single-throw toggle. 'Phone tip jacks on the rear chassis edge provide means for connection to the headset.

The method of winding coils is indicated in Fig. 1110; if the connections to the circuit are made as shown there will be no trouble in obtaining the necessary oscillation. Both coils on each form should be wound in the same direction.

To test the receiver, first try out the i.f. circuit. Connect the filament and "B" supply and place both tubes in their sockets. Put a high-frequency coil in the r.f. socket, but do not insert a coil in the oscillator socket. The only test which need be made is to see if the detector oscillates properly. Advance C_2 from minimum capacity until the detector goes into oscillation, which will be indicated by a soft hiss. This should occur at around half scale on the condenser. If it does not occur, check the coil (L_5-L_6) connections and winding direction, and if these seem right, add a few turns to the tickler, L_6. If the detector oscillates with very low capacity at C_2, it will be advisable to take a few turns off L_6 until oscillation starts at about midscale.

After the i.f. has been checked, plug in an oscillator coil for a range on which signals are likely to be heard at the time. The 5400–10,000-kc. range is usually a good one. The coils are arranged so that a minimum number is needed, even though two are used at a time. With coil C in the r.f. socket and D in the oscillator circuit, set C_1 at about half scale and turn C_3 slowly around midscale until a signal is heard. Then tune C_1 for maximum volume. Should no signals be heard, the probability is that the oscillator section of the 6K8 is not working, in which case the same method of testing is used as described above for the i.f. detector — check wiring, direction of windings of coils, and finally, add turns to the tickler, L_4, if necessary.

The same oscillator coil, *D*, is used for two frequency ranges. This is possible because the oscillator frequency is placed on the low-frequency side of the signal on the higher range. This gives somewhat greater stability at the highest-frequency range. Some pulling — a change in beat-note as the r.f. tuning is varied by means of C_1 — will be observed on the highest-frequency range, but it is not serious in the region of resonance with the incoming signal frequency.

The receiver will respond to signals either 1600 kc. lower or 1600 kc. higher than the oscillator frequency. The unwanted response, or image, is discriminated against by the tuning of the r.f. circuit. On the three lower-frequency ranges, when it is possible to find two tuning spots on C_1 at which incoming random noise peaks up, the lower-frequency peak (the one requiring the highest tuning capacity at C_1) is the right one. The oscillator frequency is 1600 kc. higher than that of the incoming signal on these three ranges. On the fourth range the oscillator is tuned 1600 kc. lower. Band-spread is not needed in the r.f. circuit, since the tuning is not very critical.

The regeneration control may be set to give desired sensitivity and left alone while tuning; only when an exceptionally strong signal is encountered is it necessary to advance it more to keep the detector in oscillation for code reception. It should be set just on the edge of oscillation for 'phone reception.

The heater requirements of the set are 0.6 amp. at 6.3 volts, approximately. Either a.c. or d.c. may be used. The "B" battery current is between 4 and 5 milliamperes, so that a standard 45-volt block will last many hundreds of hours. (*Bib. 1*).

• A THREE-TUBE GENERAL COVERAGE AND BAND-SPREAD SUPERHET

A superhet receiver of simple construction, having a wide frequency range for general listening-in as well as full band-spread for amateur-band reception, is shown in Figs. 1111 to 1115. The circuit uses only three tubes, and gives continuous frequency coverage from about 75 kc. (4000 meters) to 60 Mc. (5 meters). Provision is made for spreading each of the amateur bands over most of the tuning dial. The receiver is intended for operation

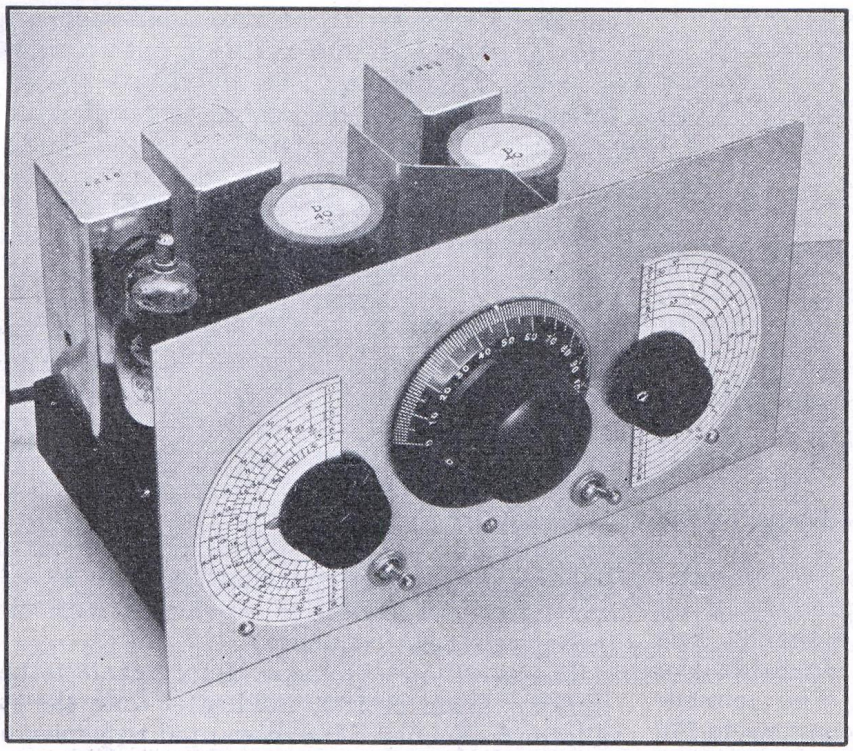

Fig. 1111 — The three-tube superhet, designed for either a.c. or d.c. heater operation and 90-volt "B" battery plate supply.

from either a 6.3-volt transformer or 6-volt storage battery for filament supply, and a 90-volt "B" battery for plate supply. It can therefore be used either as an inexpensive station receiver or for portable work when a car battery is available.

The circuit diagram is given in Fig. 1112. A 6K8 is used as a combined oscillator-mixer, followed by a 6SK7 i.f. amplifier. The intermediate frequency is 1600 kc., a frequency which reduces image response on the higher frequencies and simplifies the design for low-frequency operation in the region below the broadcast band. One section of the 6C8G double triode is used as a second detector and the other section as a beat-frequency oscillator. Headphone output is taken from the plate circuit of the second detector.

To simplify construction, the antenna and oscillator circuits are separately tuned. The antenna tuning control, C_1, may be used as a volume control by detuning from resonance. The oscillator circuit, $L_3C_2C_3$, is tuned 1600 kc. higher than the signal on frequencies up to 5 Mc.; above 5 Mc. the oscillator is 1600 kc. lower than the signal. C_2 is the general coverage or band-setting condenser, C_3 the band-spread or tuning condenser. C_4 is a tracking condenser which sets the oscillator tuning range on each band so that it coincides with the tuning range in the mixer grid circuit.

The i.f. stage uses permeability-tuned transformers with silvered-mica fixed padding condensers. The second detector is cathode-

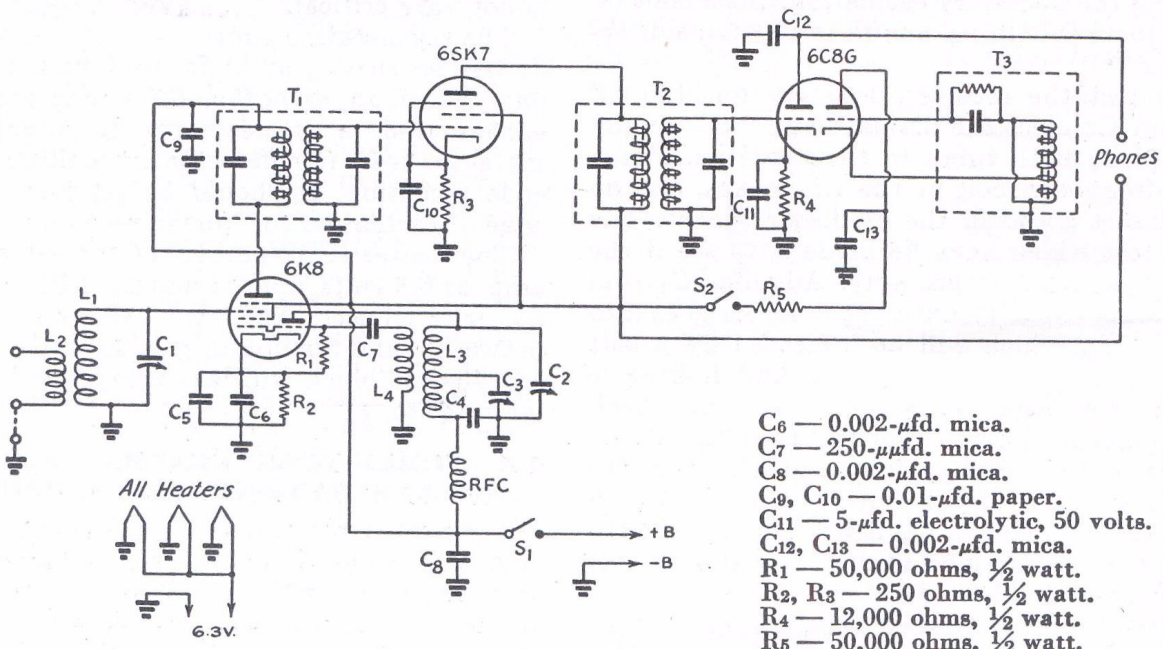

Fig. 1112 — The three-tube superhet wiring diagram.

C_1 — 100-$\mu\mu$fd. variable (Hammarlund MC-100-M).
C_2 — 140-$\mu\mu$fd. variable (Hammarlund MC-140-M).
C_3 — 35-$\mu\mu$fd. variable (Hammarlund HF-35).
C_4 — Oscillator padder; see coil table.
C_5 — 0.1-μfd. paper.
C_6 — 0.002-μfd. mica.
C_7 — 250-$\mu\mu$fd. mica.
C_8 — 0.002-μfd. mica.
C_9, C_{10} — 0.01-μfd. paper.
C_{11} — 5-μfd. electrolytic, 50 volts.
C_{12}, C_{13} — 0.002-μfd. mica.
R_1 — 50,000 ohms, ½ watt.
R_2, R_3 — 250 ohms, ½ watt.
R_4 — 12,000 ohms, ½ watt.
R_5 — 50,000 ohms, ½ watt.
T_1, T_2 — 1600-kc. permeability-tuned i.f. transformer, interstage type (Millen 64161).
T_3 — 1600-kc. beat oscillator transformer (Millen 65163).
L_1, L_2, L_3, L_4 — See coil table.
S_1, S_2 — S.p.s.t. toggle switch.
RFC — 2.5-mh. r.f. choke.

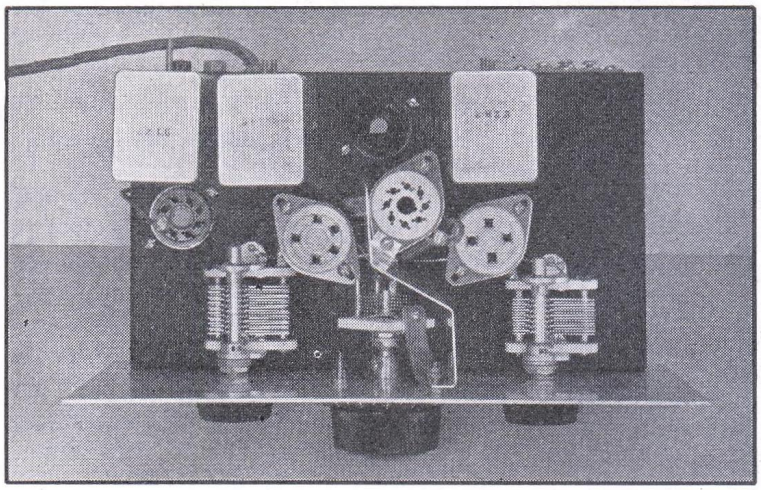

Fig. 1113 — A plan view of the three-tube superhet with the coils and tubes removed.

Fig. 1114 — Below the chassis of the three-tube receiver. The r.f. choke is mounted near the oscillator coil socket to keep the r.f. leads short. In the i.f. stage, care should be taken to keep the plate and grid leads from the i.f. transformer short and well separated. A four-wire cable is used for power supply connections. The 'phone tip jacks are in the upper right corner.

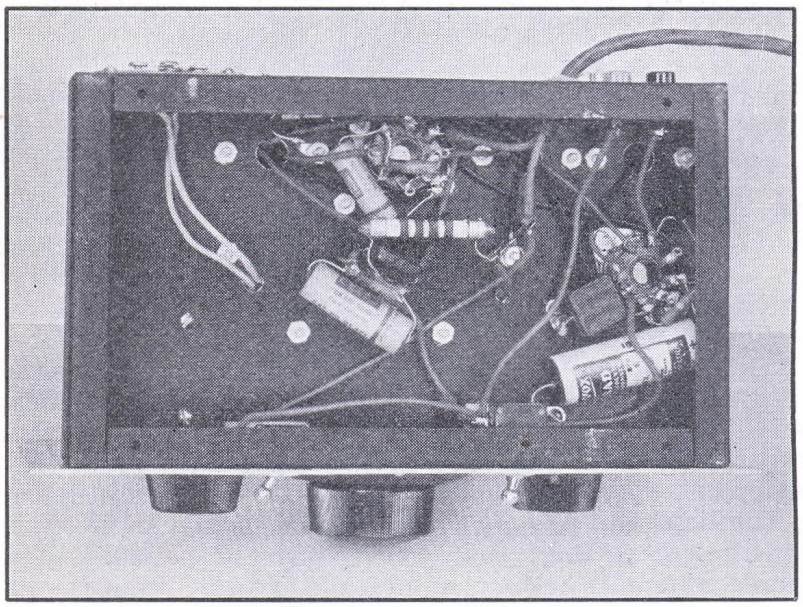

biased by R_4, with C_{11} a by-pass for audio frequencies.

The second 6C8G section is the beat oscillator, using a permeability-tuned transformer. The grid condenser and leak are built into the transformer. The plate is fed through the b.o. on-off switch and a dropping resistor, R_5, the latter serving both to reduce the "B" current drain and to cut down the output of the oscillator to a value suitable for good heterodyning. No special coupling is needed between the beat oscillator and the second detector; there is enough stray coupling between the two sections of the tube to introduce the beat frequency into the detector circuit.

The plates and screens of all tubes except the beat oscillator are operated at the same voltage — 90 volts. The "B" current drain is approximately 15 milliamperes, which is about the normal drain for medium-size "B" batteries. The receiver will operate satisfactorily, but with somewhat reduced volume, with a single 45-volt battery for "B" supply.

The parts arrangement is shown in the photographs of Figs. 1113 and 1114. The chassis is 5½ by 9½ by 1½ inches. The metal panel is 10½ inches wide and 6 inches high. The mixer tuning condenser, C_1, is at the right, band-spread tuning condenser C_3 in the center, controlled by the National Type A 3½-inch dial, and the band-set condenser, C_2, at the left. The on-off switches for the "B" supply and the beat oscillator are mounted on the front edge of the chassis as shown.

Referring to the top view, Fig. 1113, the i.f. section is along the rear edge, with T_1 at the right. Next is the socket for the 6SK7, then T_2 and finally T_3 at the extreme left. The socket for the 6C8G is just in front of T_3. The triode section with the grid brought out to the top cap is used for the beat oscillator.

The r.f. section has been arranged for short leads to favor high-frequency operation. The three sockets grouped closely together in the center are, from left to right, the oscillator coil socket, socket for the 6K8, and the mixer coil socket. All are mounted above the chassis by means of mounting pillars, so that practically all r.f. leads are above deck. The oscillator grid leak, R_1, and the high-frequency cathode by-pass condenser, C_6, should be mounted directly on the socket before it is installed. So also should the oscillator grid condenser, C_7, which can be seen extending to the left toward the oscillator coil socket in Fig. 1113. Power supply connections should be soldered to the 6K8 socket prongs before the socket is mounted, and these leads brought down through a hole in the chassis.

C_1 and C_2 are mounted directly on the chassis. C_3 is held from the panel by means of a small bracket made from metal strip, bent so that the condenser shaft lines up with the dial coupling. A shield made of aluminum separates the oscillator and mixer sections; this shield is essential to prevent coupling between the

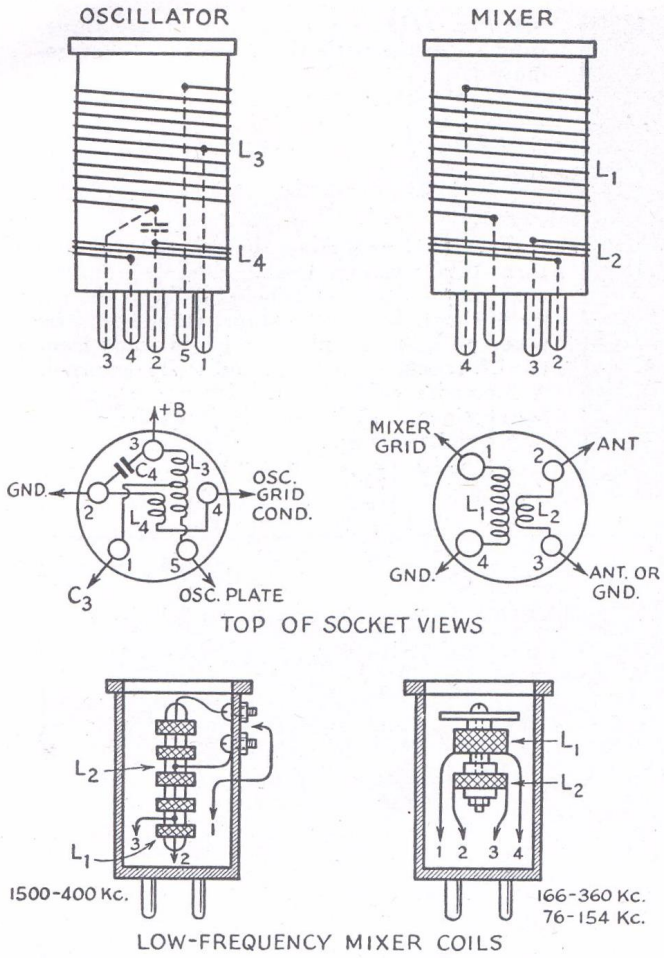

Fig. 1115 — **How the coils for the three-tube superhet are constructed. On the hand-wound coils, all windings are in the same direction.**

two circuits which might otherwise cause interaction and poor performance.

The first step in putting the receiver into operation is to align the i.f. amplifier. This should preferably be done with the aid of a test oscillator, but if one is not available the circuits may be aligned on hiss or noise. The beat oscillator can also be used to furnish a signal for alignment. Further information on alignment may be found in Chapter 7.

The coils are wound as shown in Fig. 1115. A complete set of specifications is given in the coil table. Ordinary windings are used for all oscillator coils, and for all mixer coils for frequencies above 1600 kc. Below 1600 kc., readily-available r.f. chokes are used for the tuned circuits. For the broadcast band and the 600–750-meter ship-to-shore channels, the mixer coil is a Hammarlund 2.5-mh. r.f. choke, with the pies tapped as shown in Fig. 1115. The grid end and the intermediate tap are connected to machine screws mounted near the top of the coil form, and a flexible lead is brought out from the grid pin in the coil form to be fastened to either lead as desired. Mixer coils for the two lowest-frequency ranges are constructed as shown. The antenna winding in each case is a coil taken from an old 465-kc. i.f. transformer, having an inductance of about 1 millihenry. The inductance is not particularly critical, and a pie from a 2.5-mh. choke may be used instead.

With the i.f. aligned, the mixer grid and oscillator coils for a band can be plugged in. C_3 should be set near minimum and C_2 tuned from minimum until a signal is heard. Then C_1 is adjusted for maximum signal strength. If C_2 is set at the high-frequency end of an amateur band, further tuning should be done with C_3, and the band should be found to cover about 75 per cent of the dial. C_3 can of course be used for band-spread tuning outside the amateur bands. It is convenient to calibrate the re-

COIL DATA FOR THE THREE-TUBE SUPERHET

Range	*Turns*					C_4
	L_1	L_2	L_3	L_4	L_3 *Tap*	
A — 76–154 kc.	30 mh.	1 mh.	65	12	Top	300 μμfd.
166–360 kc.	8 mh.	1 mh.				
400–1500 kc.	2.5 mh.*	*				
B — 1.6 to 3.2 Mc. (160)	56	10	42	11	Top	75 μμfd.
C — 3.00 to 5.7 Mc. (80)	32	8	27	9	Top	100 μμfd.
D — 5.4 to 10.0 Mc. (40)	18	8	22	9	12	0.002 μfd.
E — 9.5 to 18 Mc. (20)	10	8	12	3½	6	400 μμfd.
F — 15.0 to 30 Mc. (10)	6	4	6	2½	2½	400 μμfd.
G — 30 to 60 Mc. (5)	3	3	3½	1	1	300 μμfd.

* See Fig. 1115 and text for details. C_4 is mounted inside oscillator coil form; see Fig. 1115. Band-spread taps on L_3 measured from bottom (plus-B end) of coil. L_3-A and L_1-B coils close-wound with No. 22 enamelled wire; L_3-B close-wound with No. 20 enamelled; all other grid coils (L_1 and L_3) wound with No. 18 enamelled, spaced to give a length of 1½ inches on a 1½-inch diameter form (Hammarlund SWF) except the G coils, which are spaced to a length of 1 inch on 1-inch diameter forms (Millen 45004 and 45005). Antenna and plate coils, L_2 and L_4, are close-wound with No. 24 enamelled, spaced about one-eighth inch from bottoms of grid coils, except for L_4-G, which is interwound with L_3.

ceiver, using homemade paper scales for the purpose as shown in Fig. 1111. Calibration points may be taken from incoming signals of known frequency, from a calibrated test oscillator, or from harmonics of a 100-kc. oscillator as described in Chapter 18. The mixer calibrations need only be approximate, since tuning of the mixer circuit has little effect on the oscillator frequency. It is sufficient to make a calibration which ensures that the mixer is tuned to the desired signal rather than the image.

On the broadcast band, the tuning range is such that with C_2 set at 1500 kc. the entire band will be covered on C_3. It is necessary, however, to change the tap on the mixer coil to make the antenna circuit cover the entire band. Only one oscillator coil is needed for the complete range from 75 to 1500 kc., but a series of coils is needed to cover the same range in the mixer circuit.

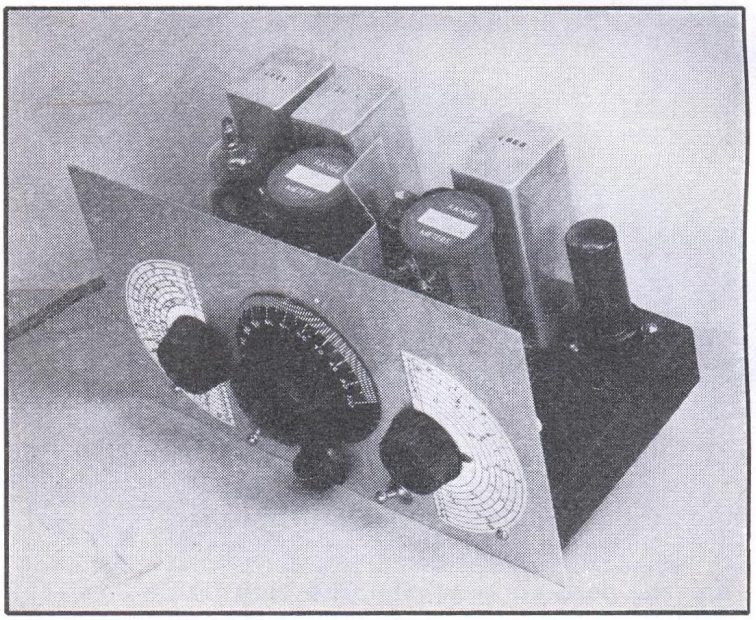

Fig. 1116 — The audio amplifier tube installed on the chassis of the three-tube receiver.

Adding an audio stage to the three-tube superhet — Very frequently the builder of a small receiver wishes it to operate a loud speaker. The three-tube receiver just described is designed for headphone operation, but readily can be converted to a four-tube set for use with a speaker. For this purpose a 6F6 pentode can be added to the circuit diagram as shown in Fig. 1117. There is ample chassis space for installation of the additional tube. Figs. 1116 and 1118 show how the receiver looks when completed.

For the purpose of driving the audio stage, resistance coupling is used from the plate of the second detector to the grid of the 6F6. A volume control is used for the grid resistor of the 6F6, and a jack installed in the second detector plate circuit so that a headphone plug may be inserted. The volume control, R_7, should be the midget type so that it will fit in the chassis, and is installed with its control projecting under the tuning dial. In the bottom view, Fig. 1118, the 6F6 socket is in the upper left corner, along with the cathode resistor and by-pass condenser, R_8 and C_{15}. The coupling condenser, C_{14}, and plate resistor, R_6, are mounted on an insulated lug strip near the volume control.

The 6F6 will require a plate supply of 250 volts at about 40 milliamperes. This may be taken from a regular power pack, and a five-wire connection cable is used to provide an extra lead for the purpose. The first three tubes may be operated from a "B" battery as before. Alternatively, the power supply may be constructed with a tap giving 90 or 100 volts for these tubes, the tap being connected to the proper wire in the connection cable. For best performance, the output voltage of such a tap should be regulated by a VR-105-30 regulator tube. A suitable power supply circuit is shown in Fig. 1119.

The primary winding of the speaker output transformer always should be connected in the plate circuit of the 6F6 when the tube is being fed "B" voltage. Operating without the plate circuit closed is likely to damage the screen. Any speaker having a transformer with primary impedance of 7000 ohms will be satisfactory; a permanent-magnet dynamic is convenient since no field supply is necessary.

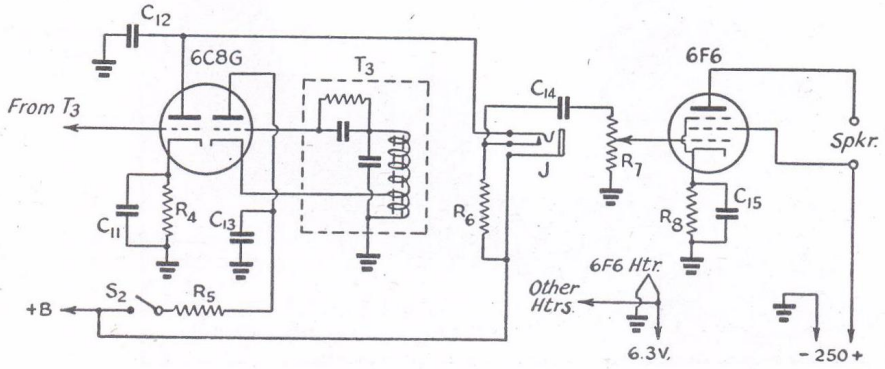

Fig. 1117 — Pentode audio amplifier for the three-tube superhet. Except as noted below, components correspond to those bearing similar numbers in Fig. 1112.
C_{14} — 0.1-μfd. paper.
C_{15} — 25-μfd. electrolytic, 50 volt.
R_6 — 120,000 ohms, ½ watt.
R_7 — 500,000-ohm volume control.
R_8 — 400 ohms, 1 watt.
J — Closed-circuit jack.

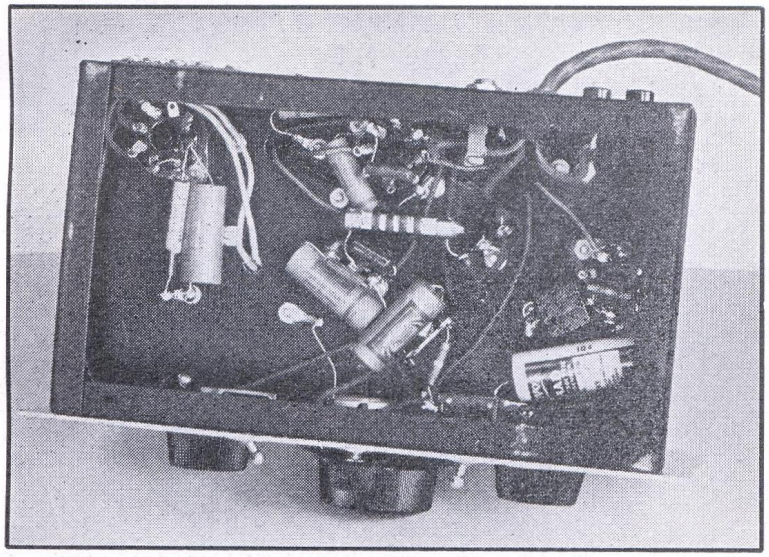

Fig. 1118 — Additional parts for the audio output stage can readily be identified in this sub-chassis view of the receiver.

Fig. 1119 — Power supply circuit for the three-tube superhet.

C_1 — 8-μfd. electrolytic, 450 volts.
C_2 — 16-μfd. electrolytic, 450 volts.
R_1 — 5000 ohms, 10 watts.
L_1 — 10 henrys, 65 ma.
T_1 — 275 to 300 volts each side center tap, 60–70 ma.; 6.3 volts at 1 amp. or more; 5-volt 2-amp. rectifier winding.
S_1 — S.p.s.t. toggle switch.

Dual-unit electrolytic condenser may be used. Output voltage will be approximately 250 at full receiver load.

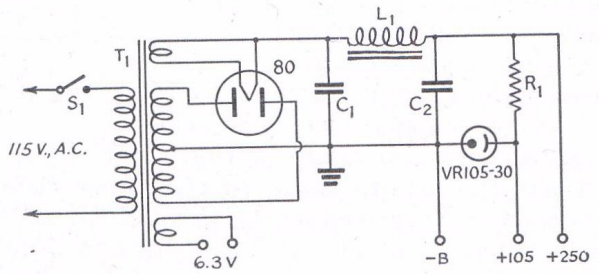

For the portable work the 6F6 may be removed from the receiver and the three tubes used on batteries as previously described.

• A REGENERATIVE SINGLE-SIGNAL RECEIVER

An inexpensive amateur-band receiver using i.f. regeneration for single-signal reception, is shown in Fig. 1120. Fig. 1121 gives the circuit diagram. Regeneration also is used in the mixer circuit to improve the signal-to-image ratio and to give added gain. This receiver is designed to give the maximum of performance, in the hands of a capable operator, at minimum cost, selectivity, stability and sensitivity being primary considerations.

The mixer, a 6SA7, is coupled to the antenna and is separately excited by a 6J5 oscillator. There is a single 460-kc. i.f. stage, using a 6SK7 and permeability-tuned transformers. The second detector and first audio amplifier is a 6SQ7 and the audio output tube for loudspeaker operation is a 6F6. The separate beat oscillator circuit uses a 6C5. A VR-105 voltage regulator tube is used to stabilize the plate voltage on the oscillators and the screen voltage on the mixer and i.f. tubes.

To make construction easy and to avoid the necessity for additional trimmer condensers on each coil, the mixer and high-frequency oscillator circuits are separately tuned. Main tuning is by the oscillator band-spread condenser, C_3, which is operated by the calibrated dial. C_2 is the oscillator band-setting condenser. The mixer circuit is tuned by C_1, and regeneration in this circuit is controlled

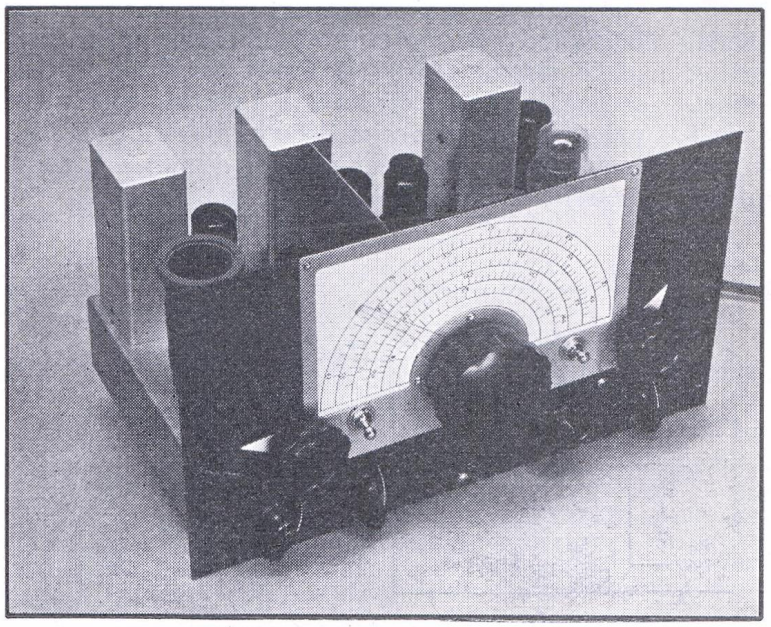

Fig. 1120 — A 7-tube superhet using regeneration to give single-signal reception and improve image ratio. The dial (National ACN) may be directly calibrated for each amateur band.

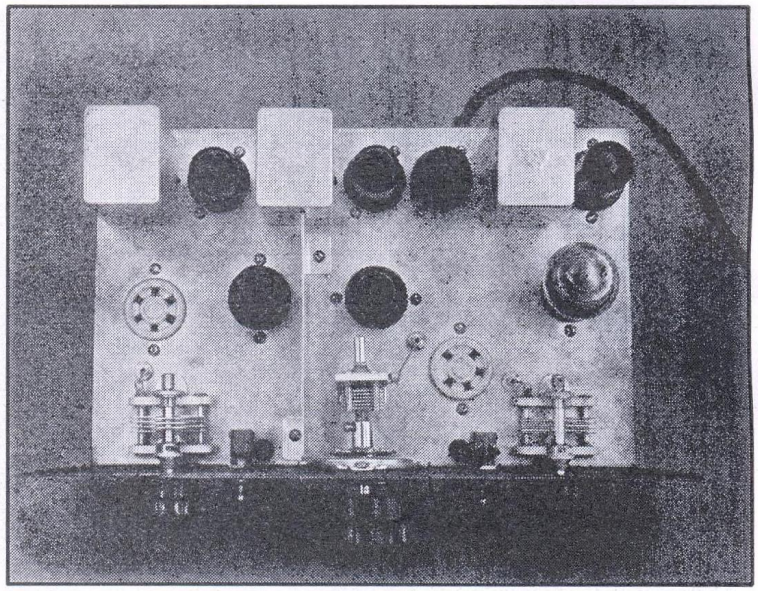

Fig. 1122 — Top view of the 7-tube superhet without coils in place. Placement of parts is discussed in the text.

by R_{15}, connected across the mixer tickler coil, L_3.

R_{16} is the i.f. amplifier gain control, which also serves as an i.f. regeneration control when this stage is made regenerative. C_{15} is the regeneration condenser; it is adjusted to feed back a small amount of i.f. energy from the plate to the grid of the 6SK7 and thus produce regeneration. If the high selectivity afforded by i.f. regeneration is not wanted, C_{15} may be omitted.

Diode rectification is used in the second detector circuit. One of the two diode plates in the 6SQ7 is used for developing a.v.c. voltage, being coupled through C_{22} to the detector diode. The detector load resistor consists of R_5 and R_7 in series, the tap being used for r.f. filtering of the audio output to the triode section of the tube. R_{18} is the a.v.c. load resistor; R_9, C_{14} and C_{12} constitute the a.v.c. filter circuit. S_2 cuts the a.v.c. out of circuit by grounding the rectifier output. The headphones connect in the plate circuit of the triode section of the 6SQ7. R_{17} is the audio volume control.

The top and bottom views, Figs. 1122 and 1123, show the layout quite clearly. The

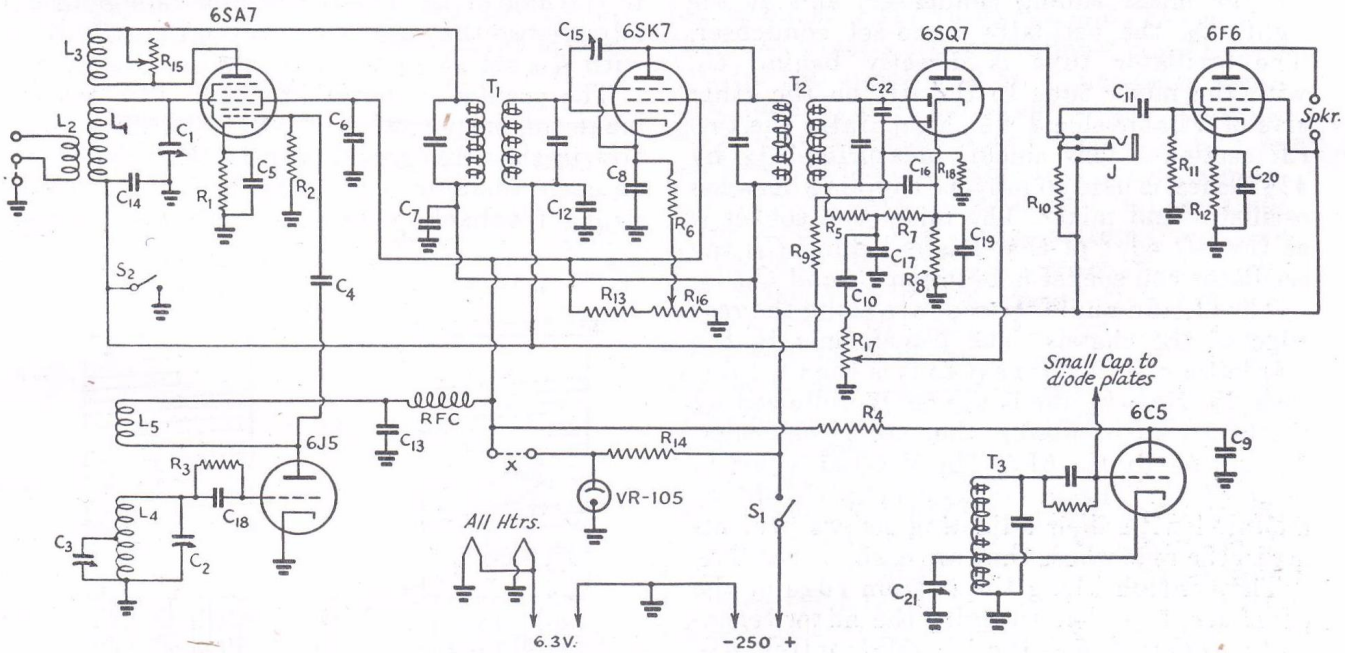

Fig. 1121 — Circuit diagram of the regenerative superhet.

C_1, C_2 — 50-$\mu\mu$fd. variable (Hammarlund MC-50-S).
C_3 — 35-$\mu\mu$fd. variable (National UM-35).
C_4 — 50-$\mu\mu$fd. mica.
C_5, C_6, C_7, C_8 — 0.1-μfd. paper, 600 volts.
C_9, C_{10}, C_{11}, C_{12} — 0.01-μfd. paper, 600 volts.
C_{13}, C_{14} — 0.005-μfd. mica.
C_{15} — 3-30-$\mu\mu$fd. trimmer (National M-30); see text.
C_{16} — 250-$\mu\mu$fd. mica.
C_{17}, C_{18}, C_{22} — 100-$\mu\mu$fd. mica.
C_{19}, C_{20} — 25-μfd. electrolytic, 50 volts.
C_{21} — 25-$\mu\mu$fd. variable (Hammarlund SM-25).
R_1 — 200 ohms, ½ watt.
R_2 — 20,000 ohms, ½ watt.
R_3, R_4, R_5 — 50,000 ohms, ½ watt.
R_6 — 300 ohms, ½ watt.
R_7 — 0.2 megohm, ½ watt.
R_8 — 2000 ohms, ½ watt.
R_9 — 1 megohm, ½ watt.
R_{10} — 0.1 megohm, ½ watt.
R_{11} — 0.5 megohm, ½ watt.
R_{12} — 450 ohms, 1 watt.
R_{13} — 75,000 ohms, 1 watt.
R_{14} — 5000 ohms, 10 watts.
R_{15} — 0,000-ohm volume control.
R_{16} — 25,000-ohm volume control.
R_{17} — 2-megohm volume control.
R_{18} — 2 megohms, ½ watt.
T_1 — 460-kc. permeability-tuned i.f. transformer, interstage type (Millen 64456).
T_2 — 460-kc. permeability-tuned i.f. transformer, diode type (Millen 64454).
T_3 — 460-kc. beat-oscillator transformer (Millen 65456).
RFC — 2.5-mh. r.f. choke.
J — Closed-circuit jack.
S_1, S_2 — S.p.s.t. toggle.
L_1–L_5, inc. — See coil table.
X indicates jumper inside VR-105 base.

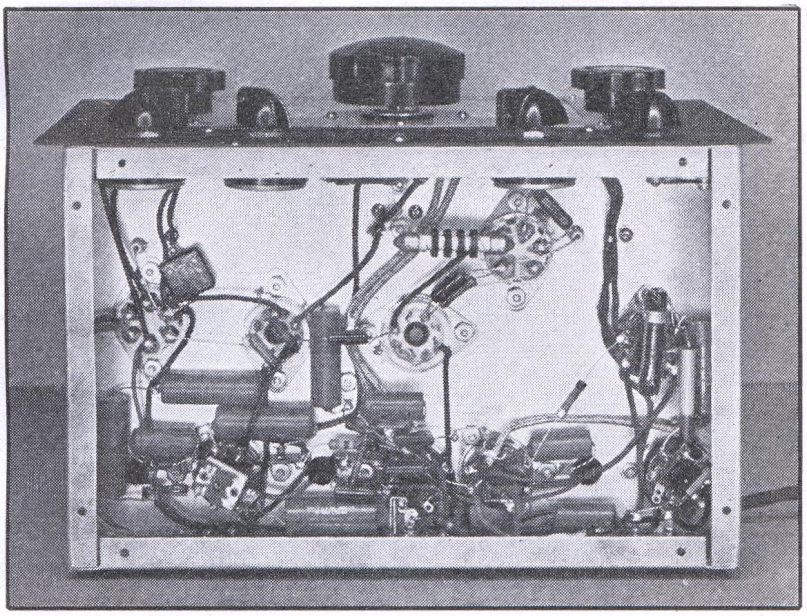

Fig. 1123 — The below-chassis wiring is shown in this view of the 7-tube receiver.

chassis is 11 by 7 by 2 inches and the panel 7 by 12 inches. The band-spread tuning condenser, C_3, is at the front center; at the left is C_1, the mixer tuning condenser; and at the right, C_2, the oscillator band-set condenser. The oscillator tube is directly behind C_3, with the mixer tube to the left on the other side of a baffle shield which separates the two r.f. sections. This shield, measuring 4¼ by 4½ inches, is used to prevent coupling between oscillator and mixer. The mixer coil socket is at the left edge of the chassis behind C_1; the oscillator coil socket is between C_2 and C_3.

The i.f. and audio sections are along the rear edge of the chassis. The transformer in the rear left corner is T_1; next to it is the i.f. tube, then T_2. Next in line is the 6SQ7, followed by the 6C5 beat oscillator, the b.o. transformer, T_3, and finally the 6F6. The VR-105 is just in front of T_3. The i.f. transformers should be mounted with their adjusting screws projecting to the rear where they are easily accessible.

The controls along the bottom edge of the panel are, from left to right, the mixer regeneration control, R_{15}, the i.f. gain control, R_{16}, the audio volume control, R_{17}, and the beat-oscillator vernier condenser, C_{21}. The latter has the corner of one rotary plate bent over so that when the condenser plates are fully meshed the condenser is short-circuited, thus stopping oscillation.

The tube heaters are all in parallel, one side of each being grounded right at the tube socket. Only one filament wire need be run from tube to tube.

The beat oscillator is coupled to the second detector by the small capacity formed by running an insulated wire from the grid of the 6C5 close to the detector diode plate prong on the 6SQ7 socket. Very little coupling is needed for satisfactory operation.

In wiring the i.f. amplifier, keep the grid and plate leads from the i.f. transformers fairly close to the chassis and well separated. Without C_{15}, the i.f. stage should be perfectly stable and should show no tendency to oscillate at full gain.

The method of winding the coils is shown in Fig. 1124 and complete specifications are given in the coil table. Ticklers (L_3) for the mixer circuit are scramble-wound to a diameter which will fit readily inside the coil form and mounted on stiff leads going directly to the proper pins in the form. The leads should be long enough to bring the coils inside the grid winding at the bottom. The amount of feedback is regulated by bending the tickler coil with respect to the grid coil. Maximum feedback is secured with the two coils coaxial, minimum when the tickler axis is at right angles to the axis of L_1. The position of L_3 should be adjusted so that the mixer goes into oscillation with R_{15} set at ½ to ¾ maximum resistance.

The oscillator circuit has been adjusted to make the proper value of rectified grid current flow in the 6SA7 injection grid (No. 1) circuit on each amateur band. This calls for a fairly strong feedback, with the result that if the

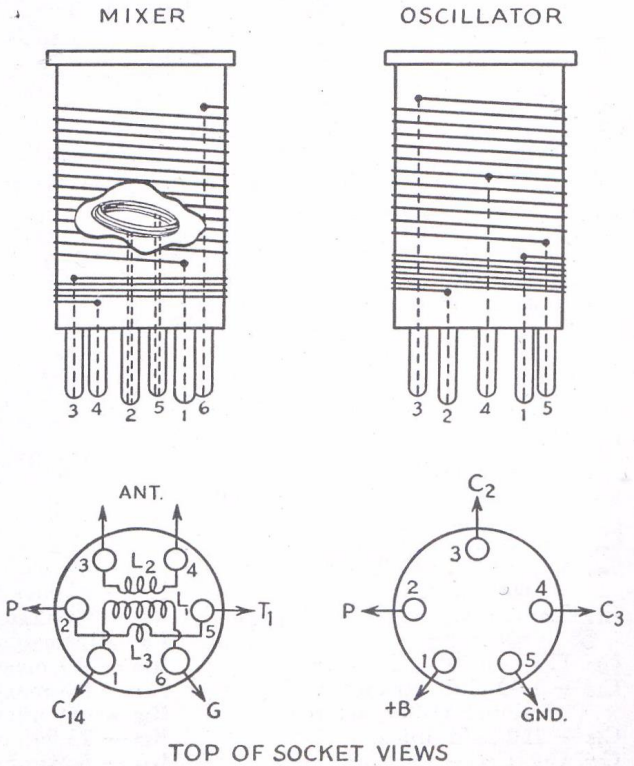

Fig. 1124 — Coil and socket connections for the 7-tube superhet.

band-set condenser is set toward the high-frequency end of its range the oscillator may "squeg." This is of no consequence unless the receiver is to be used for listening outside the amateur bands, in which case it may be corrected by taking a few turns off the tickler coil, L_5, but at some sacrifice of conversion efficiency in the amateur band for which the coil was designed.

The i.f. amplifier can be aligned most conveniently with the aid of a modulated test oscillator. First alignment should be made with C_{15} disconnected so that the performance of the amplifier non-regenerative can be checked. A headset or loud speaker can be used as an output indicator. The mixer and oscillator coils should be out of their sockets, and R_{15} should be set at zero resistance.

Connect the test oscillator output across C_1, which should be set at minimum capacity. Adjust the test oscillator frequency to 460 kc. and, using a modulated signal, adjust the trimmers on T_1 and T_2 for maximum volume. R_{16} should be set for maximum gain, and the beat oscillator should be off. As the circuits are brought into line, reduce the oscillator output to keep from overloading any of the amplifiers, as overloading might cause a false indication.

COIL DATA FOR 7-TUBE SUPERHET

Band	*Coil*	*Wire Size*	*Turns*	*Length*	*Tap*
1.75 Mc.	L_1	24	70	Close-wound	—
	L_2	24	15	" "	—
	L_3	22	15	——	—
	L_4	22	42	Close-wound	Top
	L_5	24	15	" "	—
3.5 Mc.	L_1	22	35	" "	—
	L_2	22	9	" "	—
	L_3	22	12	——	—
	L_4	22	25	1 inch	18
	L_5	22	10	Close-wound	—
7 Mc.	L_1	18	20	1 inch	—
	L_2	22	5	Close-wound	—
	L_3	22	9	——	—
	L_4	18	14	1 inch	6
	L_5	22	6	Close-wound	—
14 Mc.	L_1	18	10	1 inch	—
	L_2	22	5	Close-wound	—
	L_3	22	7	——	—
	L_4	18	7	1 inch	2.4
	L_5	22	4	Close-wound	—
28 Mc.	L_1	18	4	1 inch	—
	L_2	22	4	Close-wound	—
	L_3	22	1.5	——	—
	L_4	18	3.6	1 inch	1.4
	L_5	22	2.4	Close-wound	—

All coils except L_3 are 1½ inches in diameter, wound with enamelled wire on Hammarlund SWF Forms. Spacing between L_1 and L_2, and between L_4 and L_5, approximately ⅛ inch. Band-spread taps are measured from bottom (ground) end of L_4.

L_3 for 28 Mc. is interwound with L_1 at the bottom end. L_3 for all other coils is self-supporting, scramble-wound to a diameter of ¼ inch, mounted inside the coil form near the bottom of L_1.

After the i.f. is aligned, plug in a set of coils for some band on which there is a good deal of activity. Set the oscillator padding condenser, C_2, at approximately the right capacity; with the coil specifications given, the proportion of total C_2 capacity on each band will be about as follows: 1.75 Mc., 90 per cent; 3.5 Mc., 75 per cent; 7 Mc., 95 per cent; 14 Mc., 90 per cent; 28 Mc., 45 per cent. Set the mixer regeneration control, R_{15}, for minimum regeneration — no resistance in circuit. Connect an antenna. Switch the beat oscillator on by turning C_{21} out of the maximum position, and adjust the screw on T_3 until the characteristic beat-oscillator hiss is heard.

Now tune C_1 slowly over its scale, starting from maximum capacity. Using the 7-Mc. coils as an example, when C_1 is at about half scale there should be a definite increase in noise and in the strength of the signals which may be heard. Continue on past this point until a second peak is reached on C_1; at this peak the input circuit is tuned to the frequency which represents an image in normal reception. The oscillator in the receiver is designed to work on the high-frequency side of the incoming signal, so that C_1 always should be tuned to the peak which occurs with most capacity.

After the signal peak on C_1 has been identified, tune C_3 over its whole range, following with C_1 to keep the mixer circuit in tune, to see how the band fits the dial. With C_2 properly set, the band edges should fall the same number of main dial divisions from 0 and 100; if the band runs off the low-frequency edge, less capacity is needed at C_2, while the converse is true if the band runs off the high edge. Once the band is properly centered on the dial, the panel may be marked at the appropriate point so that C_2 may be reset readily when changing bands.

To check the operation of the mixer regeneration, tune in a signal on C_3, adjust C_1 for maximum volume, and slowly advance the regeneration control, R_{15}. As the resistance increases retune C_1 to maximum, since the regeneration control will have some effect on the mixer tuning. As regeneration is increased, signals and noise will both become louder and C_1 will tune more sharply. Finally the mixer circuit will break into oscillation when, with C_1 right at resonance, a loud carrier will be heard since the oscillations generated will go through the receiver in exactly the same way as an incoming signal. As stated before, oscillation should occur with R_{15} set at half to three-quarters full scale. In practice, always work with the mixer somewhat below the critical regeneration point and never permit it actually to oscillate. On the lower frequencies, where images are less serious, the tuning is less critical if the mixer is non-regenerative. In this case,

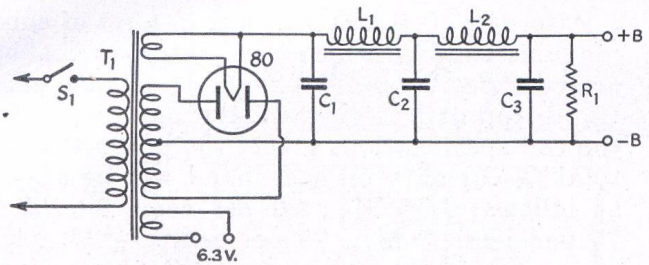

Fig. 1125 — Power supply circuit for the regenerative s.s. superhet.

C_1, C_2 — 8-μfd. electrolytic, 450 volts.
C_3 — 16-μfd. electrolytic, 450 volts.
R_1 — 25,000 ohms, 10 watts.
L_1, L_2 — 12 henrys, 80 ma., 400 ohms.
T_1 — 350 volts each side center-tap, 80–90 ma.; 6.3 volts at 2.5 amp. or more; 5-volt 2-amp. rectifier winding.
S_1 — S.p.s.t. toggle.
Dual-unit electrolytic condensers may be used. Such a supply will give 275 to 300 volts with full receiver load.

always set R_{15} at zero since there will be a range on the resistor where, without definite regeneration, the signal strength will be less than it is with zero resistance.

Should the mixer fail to oscillate, adjust the coupling by changing the position of L_3 with respect to L_1. If the coil happens to be "poled" incorrectly, the circuit will not oscillate. This can be cured by rotating L_3 through 180 degrees. It is best to test the mixer regeneration first with the antenna off, since loading effects may give misleading results until it is known that L_3 is properly set to produce oscillation.

After the preceding adjustments have been completed the i.f. regeneration may be added. Install C_{15}, taking out the adjusting screw and bending the movable plate to make an angle of about 45 degrees with the fixed plate. Realign the i.f. As the circuits are tuned to resonance the amplifier will oscillate, and each time this happens the gain control, R_{16}, should be backed off until oscillations cease. Adjust the trimmers to give maximum output with the lowest setting of R_{16}. At peak regeneration the signal strength should be about the same, despite reduced gain in the amplifier, as without regeneration at full gain. Too much gain with regeneration will have an adverse effect on selectivity.

For single-signal c.w. reception, set the beat oscillator so that when R_{16} is advanced to make the i.f. just go into oscillation the resulting tone is the desired beat-note frequency. Then back off on R_{16} to obtain the desired degree of selectivity. Maximum selectivity will be secured with the i.f. just below the oscillating point. The "other side of zero beat" will be very much weaker than the desired side.

A useful feature of the band-spread dial is that it can be directly calibrated in frequency for each band. These calibrations may be made with the aid of a 100-kc. oscillator such as described in Chapter 18. Ten-kc. points may be plotted if a 10-kc. multivibrator is available, but since the tuning is almost linear in each band a fairly accurate plot will result if each 100-kc. interval is simply divided off into ten equal parts.

Power supply requirements for the receiver are 2.2 amp. at 6.3 volts for the heaters and 80 ma. at 250 volts for the plates. Without the pentode output stage a supply giving 6.3 volts at 1.5 amp. and 250 volts at 40 ma. will be sufficient. (*Bib. 2*).

• A REGENERATIVE PRESELECTOR

A separate preselector unit, consisting of an r.f. amplifier which may be inserted between the antenna and receiver, is an extremely useful device. Its use is especially beneficial on the 14- and 28-Mc. bands where image response becomes bothersome with superhet receivers using intermediate frequencies of the order of 455 kc., since the added selectivity practically wipes out the image. Also, the gain of most receivers drops off on these two bands as compared with the lower frequencies, so that the additional gain of the preselector is helpful in building up the weaker signals to more substantial volume.

A simple preselector for these two bands is shown in Figs. 1126 and 1128. As shown in the circuit diagram, Fig. 1127, the amplifier tube is an 1852, with tuned grid and plate circuits. The tuning condensers, C_1 and C_2, are ganged for single-control tuning.

The unit is built on a 7 by 7 by 2-inch chassis. Fig. 1126 shows the arrangement of parts on top. The grid-circuit coil is at the left rear corner, with the 1852 directly in front of it. An L-shaped shield partition separates the grid circuit from the plate coil, L_3, which is in the right front corner. The sockets for both coils are mounted above chassis on small metal pillars. The ganged tuning condensers are mounted in line in the center of the chassis. They are mechanically connected together, and to the shaft bearing on the front panel, by flexible couplings. The antenna binding posts and the cords for power and r.f. output come through the rear edge of the chassis. It is necessary to cut a rectangular hole in the lower part of the back of the cabinet to make the connections accessible.

The below-chassis view, Fig. 1128, shows how the condensers are grouped about the tube socket. The mica condenser, C_5, is fastened vertically across the socket as close to it as possible (allow room for the tube centering pin to project through the socket) to provide shielding between the grid and plate prongs. The additional cathode by-pass, C_6, and the screen by-pass, C_7, also are mounted across the socket on either side of the mica condenser, thus providing additional shielding. With the

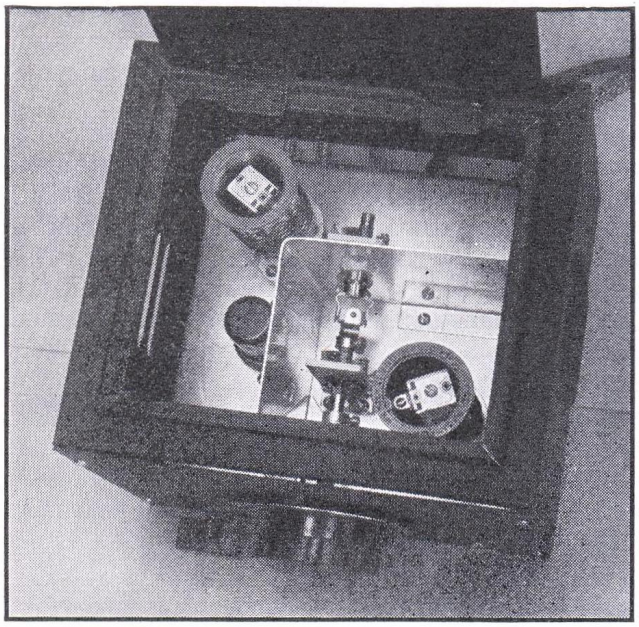

Fig. 1126 — Top view of the 14- and 28-Mc. preselector. The padder condensers are mounted inside the coil forms.

exception of the ground on C_1, all r.f. ground connections are made to one lug on the side of the ring holding the tube socket to the chassis. Shielding about the output leads from L_4 is essential to prevent unwanted feedback and also to reduce signal pickup on the line going to the receiver. The shield should be continued up to the antenna terminals of the receiver with which the preselector is used. The wires should be connected to the "doublet" terminals on the receiver, and the shield to the receiver ground terminal or chassis. The shield also is grounded to the preselector chassis. This connection between the preselector and receiver chassis is essential for good performance.

Because of the high transconductance of the 1852, very little coupling is needed between input and output circuits to cause self-oscillation when both circuits are tuned to the same frequency. The box containing the unit provides part of the shielding between the two circuits, in addition to that provided by the baffle. This simple shielding is not complete enough to prevent self-oscillation, however, so the plate of the tube is tapped down on L_3 to reduce the feedback. The tap should be located so that the circuit goes into oscillation with the gain control, R_2, at about half-scale or less. The controlled regeneration greatly increases the gain and selectivity over that obtainable without regeneration.

Power for the preselector may be taken from the receiver, since the drain is small. Initial adjustments are simple. With the receiver and preselector turned on, first tune the plate trimmer, C_4 (C_4 and C_3 are mounted inside the coil forms) for maximum noise, with R_2 near maximum (least resistance). The adjustment will be fairly critical. The tuning condenser should be at about half scale, and the receiver should be set at about the middle of the band.

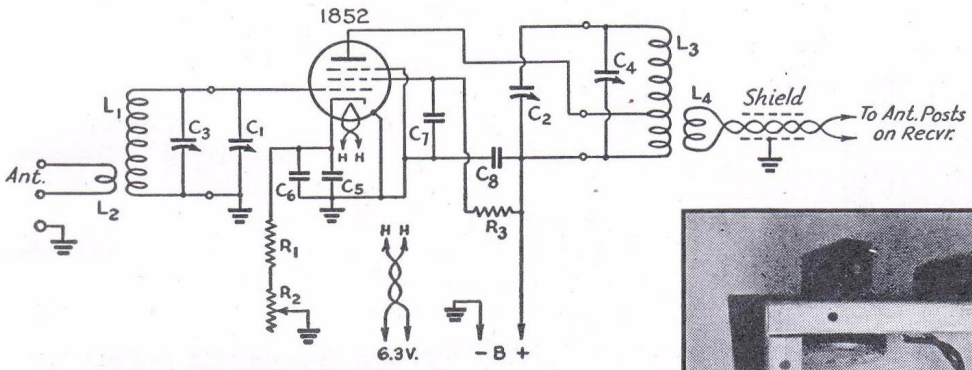

Fig. 1127 — Circuit diagram of the preselector.

C_1, C_2 — 15-$\mu\mu$fd. midget variable (National UM-15).
C_3, C_4 — 3–30-$\mu\mu$fd. isolantite-insulated mica padder (National M-30).
C_5 — 0.002-μfd. mica.
C_6, C_7, C_8 — 0.01-μfd. paper, 400 volts.
R_1 — 150 ohms, ½ watt.
R_2 — 5000-ohm variable.
R_3 — 60,000 ohms, 1 watt.
L_1 — 14 Mc.: 9 turns No. 20, diameter 1½ inches, length 1 inch.
28 Mc.: 4 turns No. 20, diameter 1½ inches, length 1 inch.
L_2 — Close-wound at ground end of L_1; 3 turns for 14 Mc., 2 turns for 28 Mc.
L_3 — Same as L_1 but tapped 3 turns from ground end for 14 Mc. and 1 turn from ground for 28 Mc.
L_4 — Same as L_2, on same form as L_3.

Fig. 1128 — Below chassis view of the preselector. Note grouping of by-pass condensers about the tube socket to provide shielding.

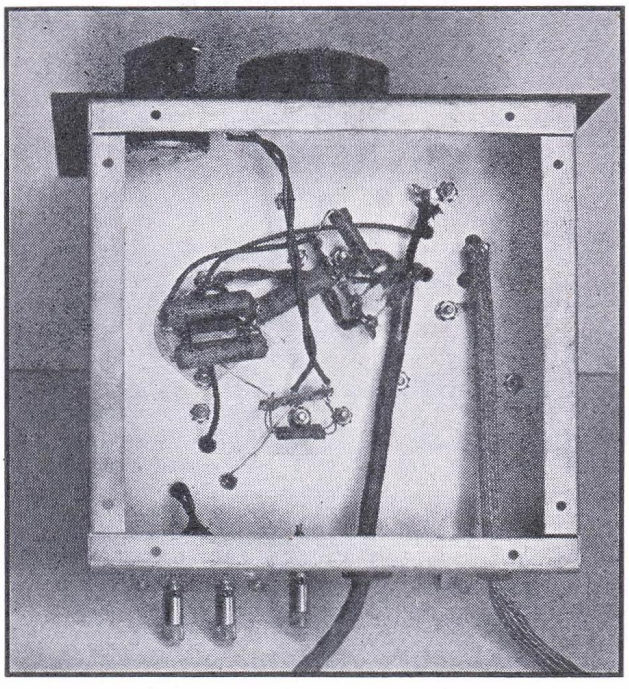

Then set R_2 at minimum gain (resistance all in) and adjust C_3, the grid padder, for maximum noise. The adjustments may be made on a signal as well as on noise. Next, advance R_2 a little at a time, simultaneously swinging C_3 through resonance, until oscillations commence. Back off R_2 to the point just below oscillation and readjust C_3 and C_4 for maximum output. When the lid of the cabinet is closed the feedback will decrease and R_2 must be advanced more to obtain oscillation. It is not necessary to work near the critical regeneration point under normal conditions so that actual tuning is not critical. The preselector must, of course, be kept in tune with the receiver as the latter is tuned over the band.

Should the circuit oscillate at all settings of R_2, the plate tap should be moved nearer the bottom of L_3. If no oscillations take place at any setting, move the tap toward the plate end until oscillation starts at about half-scale on R_2.

The improvement in gain and reduction of image response will depend upon the amount of regeneration used. With average-strength signals and regeneration below the critical point for easy tuning, the signal-to-image ratio will be improved by a factor of 40 to 50 on 28 Mc., and 100 or more on 14 Mc. Used with the average receiver having one r.f. stage ahead of the mixer, this means that the overall image ratio will be of the order of 5000 on 14 Mc. and 400 or 500 on 28 Mc. The voltage gain is about 100 under the same conditions. Greater selectivity and gain can be obtained by working closer to the critical regeneration point.

BIBLIOGRAPHY

1 — "A Two-Tube Superhet," *QST*, February, 1941.
2 — Grammer, "Modernizing the Regenerative Superhet," *QST*, November, 1940.

CHAPTER TWELVE

Transmitter Construction

• IMPORTANT FOREWORD

To REDUCE repetition and make a treatment of wider scope possible, liberal reference to other chapters in the *Handbook* is made wherever possible.

For straightforward transmitter adjustments, such as the tuning and neutralizing of standard circuits, the reader should consult Chapter Four. Chapter Ten contains the information on the adjustment of antenna tuners with various types of antennas. Keying systems are treated in Chapter Six. The construction of meter shunts is covered in Chapter Eighteen, while operating data on transmitting tubes not specifically covered in this chapter will be found in the tables of Chapter Twenty.

Any unusual characteristics in tuning or operation are explained in the text describing the construction of each unit in this chapter.

In the descriptions of apparatus to follow, not only the electrical specifications but also the manufacturer's name and type number have been given for most components. This is for the convenience of the builder who may wish to make an exact copy of some piece of equipment. However, it should be understood that a component of different manufacture, but of equivalent quality and having the same electrical specifications, may be substituted wherever desired.

In most cases, such substitutions will make no major modifications necessary, although slight wiring changes may be needed to take care of different terminal arrangements, etc.

• SIMPLE TETRODE OSCILLATOR TRANSMITTER

The unit shown in the photograph of Fig. 1201 represents one of the simplest types of amateur transmitters. The various parts are assembled on a breadboard which may be purchased already finished at any "dime" store. Rubber feet are tacked on at the corners to elevate the base a half-inch or so to clear mounting screws. A "ground" wire is run from one side of the crystal socket to one side of the coil socket to which all ground connections shown in the diagram of Fig. 1202 are made.

Since parallel plate feed is used, the only exposed high-voltage points are the plate-circuit r.f. choke and the high-voltage power terminal. Grid bias is obtained entirely from the cathode

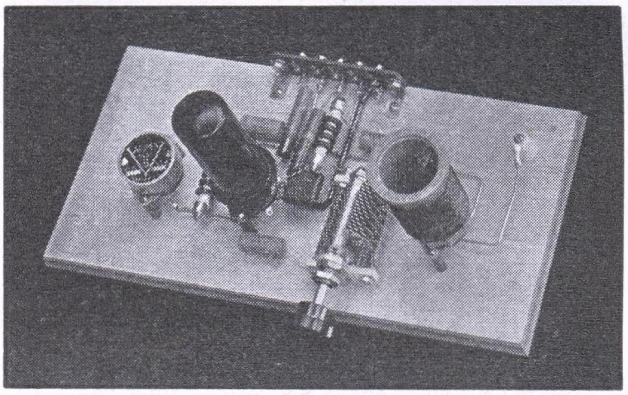

Fig. 1201 — The simple breadboard tetrode oscillator transmitter. The grid r.f. choke is between the crystal and 6L6 and the plate choke to the right of the 6L6. The cathode and screen resistors are to the rear of the 6L6. The blocking condenser, C_2, is between the tube and the tank condenser.

resistance. Either simple voltage feed to a half-wave antenna or an antenna a multiple of one-half wavelength long or link coupling to an an-

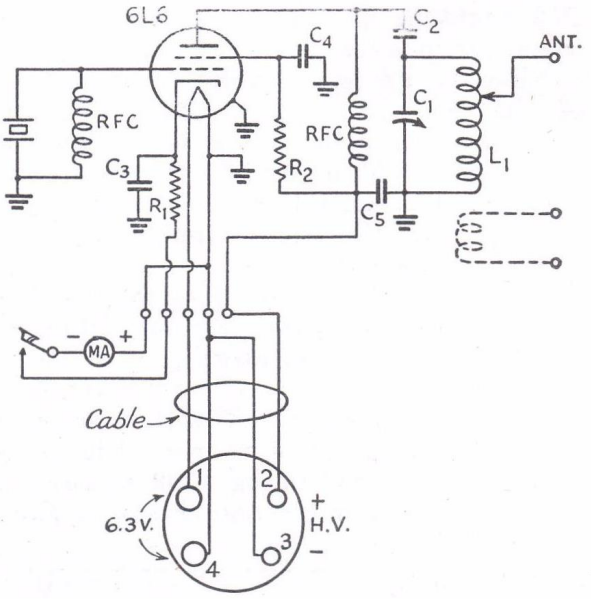

Fig. 1202 — Circuit diagram of the simple tetrode oscillator transmitter.

C_1 — 250-$\mu\mu$fd. midget variable (National STH250).
C_2 — 0.001-μfd. mica.
C_3, C_4, C_5 — 0.01-μfd. paper.
R_1 — 200 ohms, 2-watt.
R_2 — 15,000 ohms, 2-watt.
RFC — 2.5-mh. r.f. choke.
L_1 — 1.75 Mc. — 42 turns No. 22 enam., 2 in. long.
3.5 Mc. — 21 turns No. 18 enam., 2 in. long.
7 Mc. — 15 turns No. 18 enam., 2 in. long.
All coils wound on 4-prong, 1½-in. diam. forms.

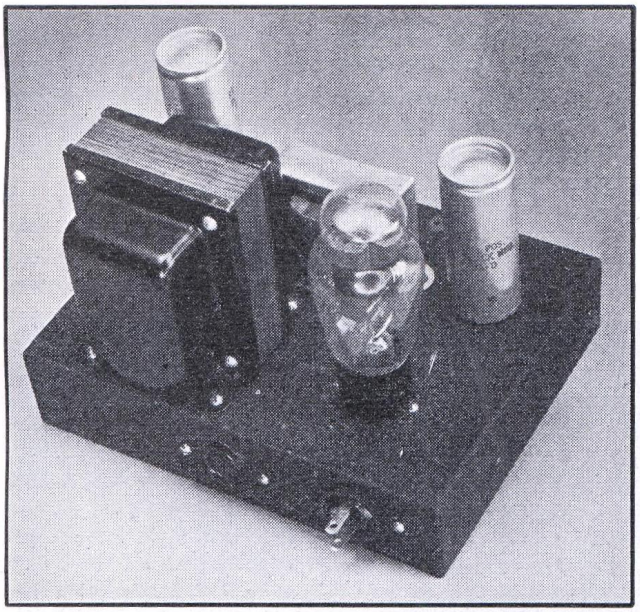

Fig. 1203 — This small unit delivers 450 volts at full-load current of 130 ma. with 0.3% ripple and measured regulation of 17%. By converting to choke-input filter by inserting a similar choke between rectifier and present filter, the output voltage would be reduced to about 300 volts. The chassis measures 7 in., by 9 in., by 2 in. All exposed component terminals are underneath the chassis. Filament and plate terminals are brought out to a 4-prong socket. The circuit diagram is shown in Fig. 1204.

tenna tuner may be used by adding the link winding at the bottom of the form, as indicated in the circuit diagram.

Although a 6L6 is shown in the photograph, a 6V6 might be used at lower plate voltage without circuit alteration. Any available supply delivering up to 450 volts or so may be used with this unit, the power output obtainable increasing with the voltage used. The unit shown in Fig. 1203 is suitable. The two units are connected by a 4-wire battery cable with a 4-prong plug at the power-supply end to fit the outlet in the power supply.

Since the circuit is not designed for frequency doubling, a separate crystal will be required for each frequency at which it is desired to operate.

Tuning — A milliammeter with a scale of 100 or 200 ma. should be connected in series with the key, as shown in Fig. 1202, to assist in tuning. With suitable coil and crystal in place and the high voltage turned on, a rise in plate current should occur when the key is closed. The plate tank condenser C_1 should then be rotated until there is a pronounced dip in plate current at resonance. If the voltage-fed antenna is used, it may now be connected to the antenna terminal and a temporary wire run from the antenna terminal to reach the coil L_1. Starting at a point one-third or half-way up from the bottom of the coil, scrape the wire at a spot, being careful not to short-circuit turns, and let the antenna wire rest against the bare spot. Tuning the transmitter as before, the plate-current dip should again be found, although less pronounced this time. The tap should be moved gradually toward the top of the coil until only a slight dip in plate current is observed as the plate tank circuit is tuned through resonance. At each adjustment of the antenna tap, the transmitter should be tested to make sure that the circuit keys well. Should a point be reached where it is difficult to get the crystal to start, the tap should be backed off somewhat. It will be found possible to load up the circuit more with certain more active crystals than with others and still maintain good starting and keying characteristics. When a satisfactory point has been found for the tap, it may be soldered in place permanently and a connection made through one of the unused pins on the coil form.

With a 6L6 and a plate supply delivering 400 volts, the screen voltage will run about 250 volts. The tube will draw about 75 ma. non-oscillating, dipping to about 50 ma. at resonance with the antenna disconnected. It should be possible to load up the circuit until the tube draws about 80 ma. at resonance. Under these conditions, the power output on each band should be 15 to 20 watts.

• A LOW-POWER ANTENNA TUNER

If an antenna with tuned feeders is used, the antenna tuner shown in Fig. 1205 may be used to couple the 6L6 oscillator transmitter to the feeders. The link winding of the transmitter and that of the antenna tuner should be connected with a pair of closely-spaced wires.

The circuit, shown in Fig. 1206, is arranged so that different tuning combinations may be

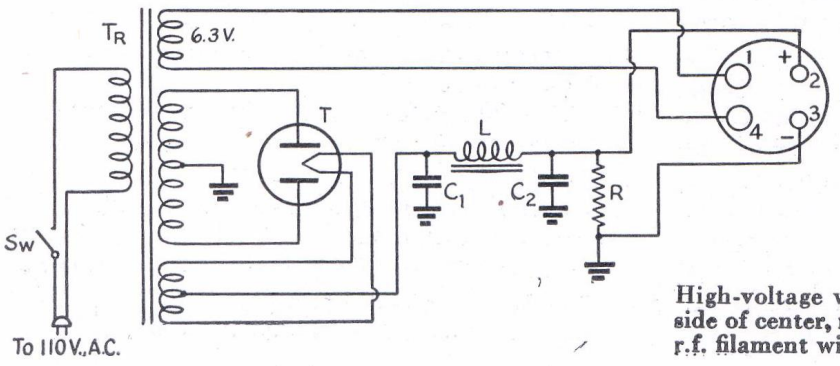

Fig. 1204 — Circuit diagram of the 450-volt, 130-ma. power supply pictured in Fig. 1203.
C_1 — 4 μfd., 600 volts, electrolytic (Mallory HS691).
C_2 — 8 μfd., 600 volts, electrolytic (Mallory HS693).
L — Filter choke, 10 hy., 175 ma., 100 ohms, (Utah 4667).
R — 15,000 ohms, 25 watts.
T — Type-80 rectifier.
Tr — Combination transformer: High-voltage winding delivering 400 volts, r.m.s. each side of center, rectifier filament winding, 5 volts, 3 amp., r.f. filament winding, 6.3 volts, 6 amp. (Utah Y616).

obtained by shifting the clips *F*, *G* and *H*. When *F* is connected to *A*, *H* connected to *D*, and *B* and *C* are connected together, the two sections of C_1 in series are connected across L_1 forming a low-capacity parallel-tuned circuit. When *H* is connected to *E* and *G* to *D*, other connections remaining the same, a high-capacity parallel circuit is formed. For series tuning, *H* is connected to *E*, *F* to *B* and *G* to *C*. A low-capacity series-tuned circuit is provided by connecting *F* to *B* and *H* to *C*.

Dimensions are given for antenna coils of four different sizes which are approximately correct for the band indicated when parallel tuning is required. For series tuning, the coil for the next-higher frequency band will usually be satisfactory. In some cases, where the feeders are not close to exact multiples of one-quarter wavelength for the frequency in use, slight alterations in coil dimensions may be required to permit tuning the system to resonance. The high-capacity circuits will usually be required for the lower frequencies, while the low-capacity connections will serve for the higher frequencies. Coupling may be adjusted by altering the number of turns in the windings at each end of the link line.

Construction — The two uprights and the strip supporting the indicating lamps are pieces of "one-by-two" stock. The uprights are each 13 inches long, while the cross-strip is 12 inches long, although these dimensions may be changed to suit the constructor. The shelf for the condenser and coil is made of a piece of crate wood 4½ inches wide. The panel may be made from a scrap of plywood 7 inches high and the whole thing may be given a couple coats of shellac or paint to suit the taste.

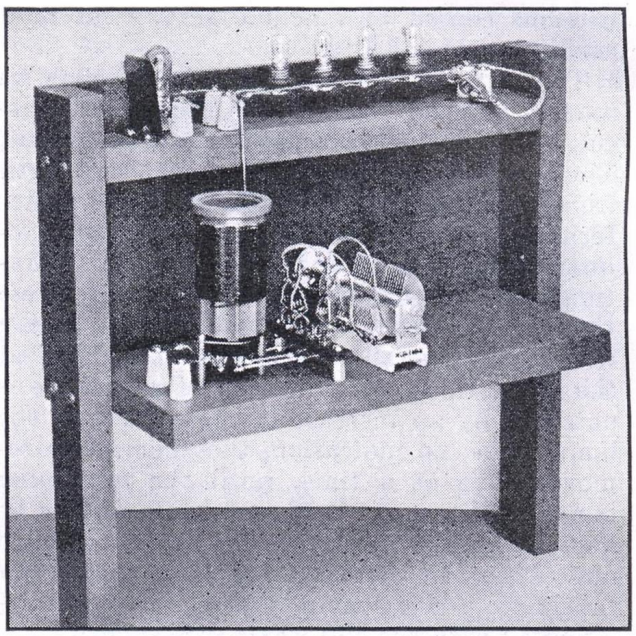

Fig. 1205 — Rear view of an antenna tuner for low-power transmitters. Dial lamps are used as r.f. indicators. The unit is made to fit over the transmitter shown in Fig. 1201. The circuit diagram is shown in Fig. 1206.

The dial lamps are soldered to a pair of parallel wires supported at each end on small standoff insulators. The bottom of the neon bulb is soldered to a short piece of wire between a third pair of standoffs. The piece of grounded metal next to the neon bulb is about 1¾ inches square. This provides a capacity to ground to enable the neon bulb to operate without touching the hand to it.

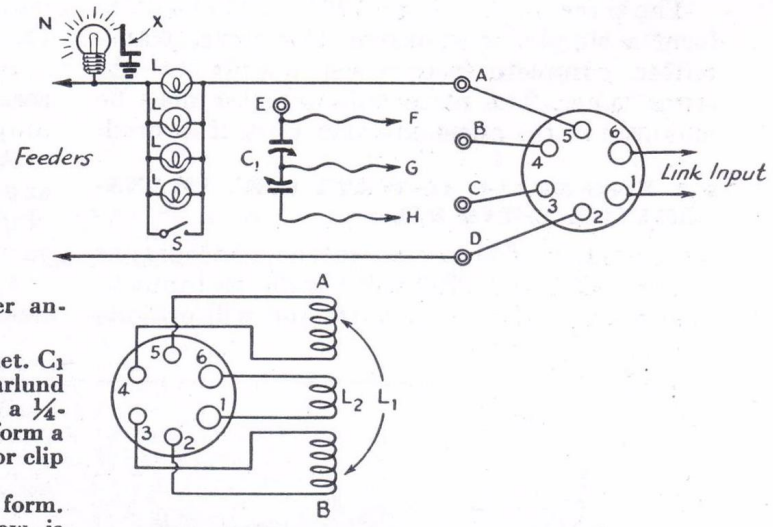

Fig. 1206 — Circuit diagram of the low-power antenna tuner.

Section A shows the connections to the coil socket. C_1 has a capacity of 140 μμfd. per section (Hammarlund MCD-140). L is a 250-ma. dial light, No. 46. N is a ¼-watt neon bulb. X is a grounded piece of metal to form a capacity for igniting the neon bulb. S is a switch or clip for short-circuiting the lamps after tuning.

B shows the connections to the 6 pins of the coil form. L_1, whose approximate dimensions are given below, is wound in two sections on the form, with the link winding, L_2, in between.

L_1 — 1.75 Mc. — 20 turns No. 22 enam., ¾-in. long each section, ½-in. space between sections, 40 turns total.

3.5 Mc. — 11 turns No. 20 enam., ¾-in. long each section, ½-in. between sections, 22 turns total.

7 Mc. — 6 turns No. 20 enam., ¾-in. long each section, ½-in. space between sections, 12 turns total.

14 Mc. — 3 turns No. 20 enam., ½-in. long each section, ¼-in. space between sections, 6 turns total.

Number of turns for the link winding, L_2, will vary from 2 to 6 or 8 turns, depending upon coupling required for proper loading. Coils are wound on Hammarlund 6-prong, 1 ½-in. diameter forms.

The socket for the plug-in coil is mounted on the shelf with spacers and woodscrews. The shield between the two sections of the variable condenser is removed to allow mounting with a screw through the hole to the shelf. The shaft of the condenser is cut off and an insulating coupling inserted between the shaft and the control knob. The contacts for shifting con-

nections consist of machine screws set in a small strip of bakelite.

The neon bulb and the dial lamps may be used to indicate resonance in the antenna circuit and relative (not actual) power output. The lamps will be useful whenever the length from the far end of the antenna to the feeder terminals is near an odd multiple of one-quarter wavelength for the frequency of operation, while the neon bulb will be useful where the length is near an even multiple. In tuning with the lamps, all sockets should be filled at the start. If, as an indication of resonance is obtained by an increase in plate current, the lamps show no indication, they should be removed, one at a time, until the remaining lamps start to glow. Sufficient lamps should be kept in the circuit to prevent danger of burn out. After the antenna has been tuned for maximum power output, they should be short-circuited with the clip.

When using the neon bulb, the grounded metal plate should be bent near the bulb until it lights (assuming the transmitter is tuned to approximate resonance with the plate-current meter). The plate should be moved no closer to the bulb than necessary to obtain a satisfactory indication.

• COMPLETE 15- TO 25-WATT OSCILLATOR TRANSMITTER

The three units of Figs. 1201, 1203 and 1205 form a simple, inexpensive, low-power transmitter, complete from power supply to antenna tuner. The plate milliammeter may be mounted in the antenna-tuner unit, if desired.

• A TWO-STAGE 45-WATT C.W. TRANSMITTER USING 6L6s

The transmitter shown in the photographs of Figs. 1207 and 1209 will handle an input to the final amplifier of 45 watts and will provide output, with crystals of proper frequency, in any of the amateur bands from 1.75 to 14 Mc. The unit is complete from power supply to antenna tuner.

Referring to the circuit diagram of Fig. 1208, a 6L6 in the Tri-tet oscillator circuit provides excitation for the amplifier at either the fundamental frequency of the crystal or its second harmonic. The second 6L6 is used as an inverted amplifier, which eliminates the necessity for neutralizing and makes an exceptionally foolproof arrangement. This transmitter is recommended especially for the beginner who has had little previous experience with oscillator-amplifier transmitters. The oscillator is coupled to the amplifier by the winding L_3 in the cathode circuit of the amplifier.

Both stages are parallel-fed to permit mounting the tank condensers directly on the metal chassis without insulation. The transmitter is keyed in the common cathode-return lead of both stages. Key connections are made through the jack *J*. Pin jacks are provided at the rear of the chassis for making meter connections. A milliammeter, connected between the center and left-hand pin jacks in the wiring diagram, registers oscillator-cathode current. Connecting the meter between the central and right-hand jack permits reading of the amplifier-cathode current. No shorts are required across the meter jacks when the meter is not in circuit, since the cathode circuits remain closed through the shunting resistors R_3 and R_4.

An antenna tuner with provision for either series or parallel tuning is link-coupled to the amplifier output.

A condenser-input filter is used in the power supply. Resistors R_9, R_{10}, R_{11} and R_{12} are included to equalize the voltage drop across the sections of the electrolytic filter condensers.

Construction — Most of the constructional details may be determined from the photo-

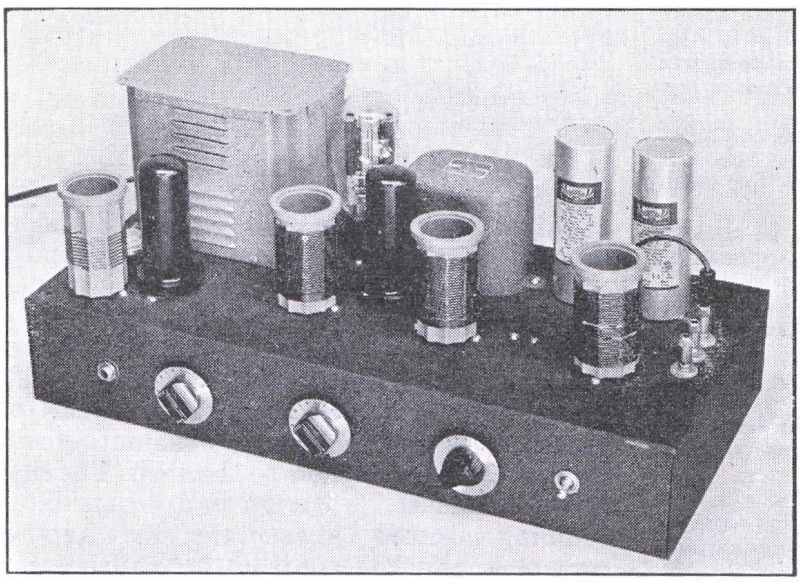

Fig. 1207 — A 45-watt, two-stage 6L6 c.w. transmitter, complete with power supply and antenna tuner. The crystal socket is behind cathode coil, L_1, at the left-hand end of the chassis. The 6L6 amplifier tube is between the oscillator plate coil, L_2, and the amplifier plate coil, L_4, at the center. The coil at the right is L_7 in the antenna tuner. Terminals at extreme right are for antenna connections. Power-supply components are arranged along the rear. The three controls in front are for the oscillator plate tank condenser, C_1, amplifier plate tank condenser, C_2, and antenna tank condenser, C_{16}, respectively from left to right. The key jack, J, is at the left and the power switch, Sw at the right. The chassis measures 8, by 17, by 3 inches.

graphs. A rectangular hole for the transformer terminals is cut in the chassis by drilling half-inch holes at the four corners and sawing out with a hacksaw. The shield between the two sections of the split-stator antenna condenser, C_{16}, is removed, leaving a hole by which the condenser may be mounted on the chassis with its shaft 4¾ inches from the end of the chassis. An insulated shaft coupling is used between the condenser and the panel-bearing unit in the front edge of the chassis. The two remaining tank condensers are shaft-mounted in the front edge without insulation at a height to bring their shafts level with that of C_{16}. C_2 is mounted at the center and the shaft of C_1 comes at 4¾ inches from the end of the chassis to balance C_{16}. The three antenna terminals are jack-top binding posts, insulated from the chassis with National button-type polystyrene insulators which are drilled out to fit the posts.

The small parts, such as by-pass condensers, blocking condensers, resistors and r.f. chokes are grouped around the points at which they connect. All high-voltage wiring is done with

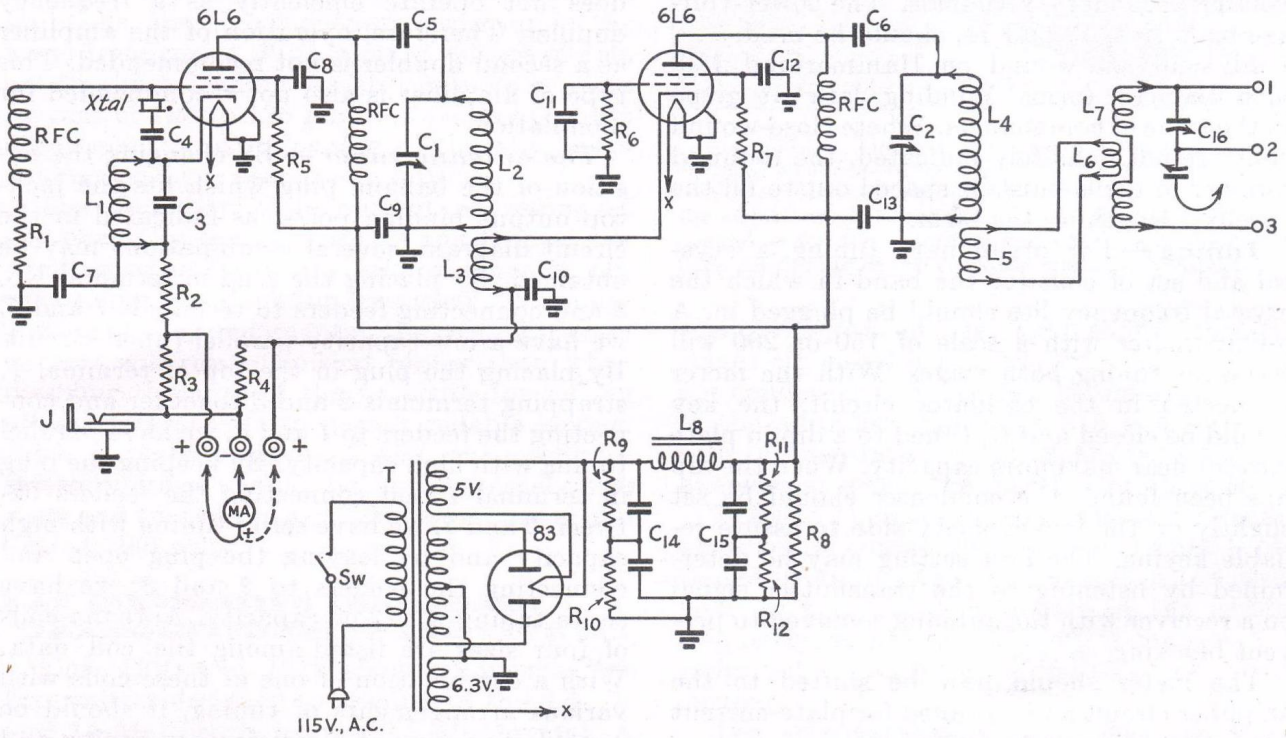

Fig. 1208 — Circuit diagram of the 45-watt c.w. transmitter.

C_1, C_2 — 150 μμfd. (National ST-150).
C_3 — 100 μμfd. mica.
C_4, C_5, C_6 — 0.001 μμfd. mica.
C_7, C_8, C_9, C_{10}, C_{11}, C_{12}, C_{13} — 0.01 μfd.
C_{14}, C_{15} — Dual 8-8 μfd. electrolytic with 4 leads, sections connected in series, 450-volt working.
C_{16} — 140 μμfd. per section (Hammarlund MCD-140-M).
J — Single, closed-circuit jack for key.
R_1 — 0.1 meg., 1-watt.
R_2 — 500 ohms, 1-watt.
R_3, R_4 — 25 ohms, 1-watt.
R_5 — 50,000 ohms, 10-watt.
R_6 — 25,000 ohms, 1-watt.
R_7 — 25,000 ohms, 10-watt.
R_8 — 50,000 ohms, 10-watt.
R_9, R_{10}, R_{11}, R_{12} — 0.5 meg., ½ watt.
RFC — 2.5-mh. r.f. choke.
Sw — S.p.s.t. toggle switch.
T — Combination transformer: 400 volts each side of center-tap, 150 ma.; 5 volts, 3 amps. filament for 83 rectifier; 6.3 volts, 4 amps. for 6L6s (UTC type S-39; low-voltage secondary taps used).

L_1 — For 1.75-Mc. crystals — 32 turns No. 24 d.s.c., close-wound.
For 3.5-Mc. crystals — 10 turns No. 22, 1-in. long; 100-μμfd. mica condenser mounted in form and connected across winding.
For 7-Mc. crystals — 6 turns No. 22, ⅝-in. long.
L_2, L_4 — 1.75-Mc. band — 55 turns No. 26, 1¾-in. long.
3.5-Mc. band — 26 turns No. 20, 1¾-in. long.
7-Mc. band — 15 turns No. 18, 1½-in. long.
14-Mc. band — 10 turns No. 18, 1½-in. long.
L_3 — Wound close to and below L_2.
1.75-Mc. band — 14 turns No. 26, close-wound.
3.5-Mc. band — 9 turns No. 24, close-wound.
7-Mc. band — 6 turns No. 20, close-wound.
14-Mc. band — 4 turns No. 20, close-wound.
L_5, L_6 — 3 to 6 turns as required for proper coupling to antenna, L_5 wound close to and below L_4; L_6 wound between sections of L_7.
L_7 * 1.75 Mc. — 20 turns No. 22, ¾-in. long each section, ½-in. space between sections, 40 turns total.
3.5 Mc. — 11 turns No. 20, ¾-in. long each section, ½-in. space between sections, 22 turns total.
7 Mc. — 6 turns No. 20, ¾-in. long each section, ½-in. space between sections, 12 turns total.
14 Mc. — 3 turns No. 20, ½-in. long each section, ¼-in. space between sections, 6 turns total.
* See text for usage.
All above coils wound on Hammarlund 1½-in. diameter forms, 4-prong for L_1, 5-prong for all others.
L_8 — 6 hy., 175 ma (UTC S29).

heavily-insulated wire. R.F. wiring is done, for the most part, with straight short sections of heavy bare wire, well-spaced from the chassis and any near-by components.

The crystal and cathode-coil sockets are wired up as shown in Fig. 1260 and the pin jacks for making connections to the v.f.o. unit are set in the left-hand end of the chassis. It is very important that the leads between the pin jacks and the cathode-coil socket be kept as short as possible.

The power transformer suggested in the list of components is fitted with two sets of high-voltage secondary terminals. The lower-voltage pair, Nos. 12 and 14, should be used.

All coils are wound on Hammarlund 1½-inch diameter forms. Winding data are given in the table of components. Where close-wound coils are not definitely indicated, the required number of turns must be spaced out to fill the specified length on the form.

Tuning — For preliminary tuning, a crystal and set of coils for the band in which the crystal frequency lies should be plugged in. A milliammeter with a scale of 150 or 200 will serve for tuning both stages. With the meter connected in the oscillator circuit, the key should be closed and C_1 tuned to a dip in plate current near maximum capacity. When the dip has been found, the condenser should be set slightly on the low-capacity side to assure reliable keying. The best setting may be determined by listening to the transmitter signal on a receiver with the antenna removed to prevent blocking.

The meter should now be shifted to the amplifier circuit and C_2 tuned for plate-current dip near maximum capacity.

With the same crystal and cathode coil in use, the coils for the next-higher-frequency band should now be plugged in and the tuning repeated for this set of coils. The transmitter will then be tuned to the second harmonic of the crystal frequency, or twice its fundamental frequency. Thus, output may be obtained in two bands from any crystal, providing its second harmonic does not fall outside an amateur band. If the coils are carefully trimmed, it will be possible to tune to the crystal fundamental near maximum-capacity settings of C_1 and C_2 and to the harmonic near minimum capacity. It should be borne in mind that the cathode coil requires changing only in case a crystal is used whose frequency is in a different band; the same cathode coil serves for fundamental and harmonic operation. An inverted amplifier does not operate efficiently as a frequency doubler. Therefore, operation of the amplifier as a second doubler is not recommended. This type of amplifier is also not recommended for modulation.

The antenna tuner — By changing the position of the banana plug which fits the jack-top output binding posts, as indicated in the circuit diagram, several combinations may be obtained. By placing the plug in terminal No. *3* and connecting feeders to terminals *1* and *3*, we have a low-capacity parallel-tuned circuit. By placing the plug in the top of terminal *1*, strapping terminals *2* and *3* together and connecting the feeders to *1* and *3*, we have parallel tuning with high capacity. By keeping the plug in terminal *1* and connecting the feeders between *2* and *3*, we have series tuning with high capacity and by leaving the plug open and connecting the feeders to *2* and *3*, we have series tuning with low capacity. Antenna coils of four sizes are listed among the coil data. With a combination of one of these coils with various arrangements of tuning, it should be possible to arrive at a satisfactory tuning and coupling adjustment. The dimensions given will be approximately correct for parallel tuning in the band indicated. For series tuning, the coil for the next-higher-frequency band will be approximately correct, if feeder lengths

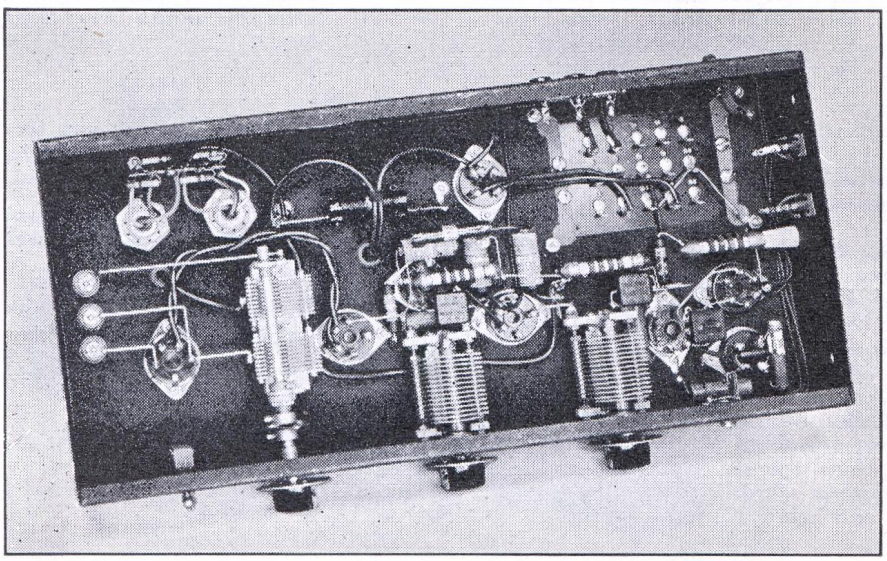

Fig. 1209 — All wiring connections are made underneath the chassis of the 45-watt c.w. transmitter. All sockets, the filter condensers, C_{14} and C_{15}, and the power transformer are submounted. C_{16} is to the left, C_2 at the center and C_1 at the right. Meter pin jacks, with shunting resistors, R_3 and R_4, are mounted in the rear edge of the chassis at the right. The pin jacks in the right edge of the chassis are for v.f.o.-input connections.

are reasonably close to quarter-wavelength multiples. The coupling may be adjusted, by changing the number of turns at each end of the link line, to load the amplifier to a maximum of 100 to 125 ma.

When resonance points have been found, the proper procedure in tuning is to set the antenna tuning well away from resonance, tune the oscillator, then the amplifier to maximum plate-current dip, and then swing the antenna-tuning condenser to resonance, indicated by a peak in amplifier plate current.

By proper adjustment, it should be possible to obtain a power output of 25 to 30 watts in all bands, the higher outputs occurring at the lower frequencies. With a plate voltage of 450, an amplifier loading which produces a plate current of 100 to 125 ma. represents optimum adjustment; greater loading will usually be accompanied by a decrease in output.

The oscillator plate current at resonance will normally run between 22 and 32 ma., depending upon frequency and whether or not the oscillator is doubling frequency. When operating at the fundamental, the oscillator plate current will run somewhat higher than when doubling, because of the necessity for setting off exact resonance to permit reliable keying. With a plate voltage of 450, the oscillator screen voltage should be approximately 200 volts and that of the amplifier, when tuned and loaded, 260 volts.

• AN INEXPENSIVE THREE-BAND TRANSMITTER USING THE TYPE 815

Figs. 1210 and 1212 show an inexpensive transmitter designed to operate in the 3.5-, 7- and 14-Mc. bands from a 3.5-Mc. crystal. A 6L6 Tri-tet oscillator is used to drive a type 815 in a push-pull amplifier circuit. As the wiring diagram of Fig. 1211 shows, the two stages are coupled inductively, while the tuning condenser is connected in the grid circuit of the amplifier. Since the 815 is a screened tube, no neutralization is necessary at the frequencies at which the transmitter operates.

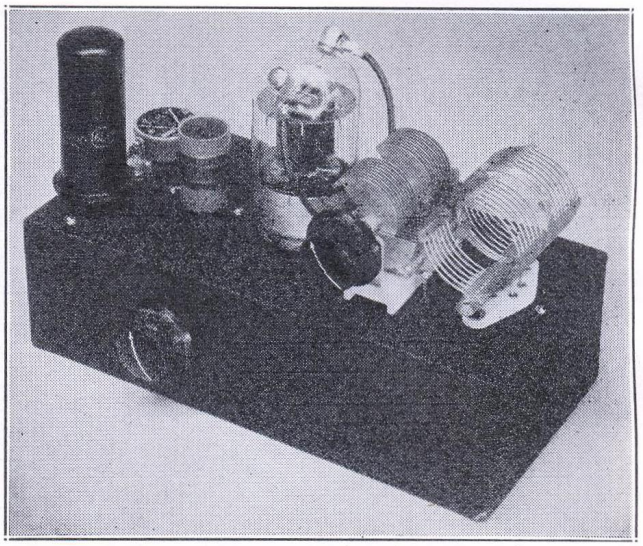

Fig. 1210 — The 815 three-band transmitter is assembled on a 3-inch, by 5-inch, by 10-inch chassis. The oscillator plate coil and amplifier grid coil are wound on the small form between the 6L6 and the 815. The lower control is for the amplifier grid condenser which controls the tuning of the oscillator plate tank circuit.

The 815 operates at all times as a straight amplifier, of course. Excitation at 14 Mc. is obtained by tuning the plate circuit of the oscillator to the fourth harmonic of the crystal frequency. A 60-ma. dial lamp is connected in series with the crystal to indicate crystal r.f. current.

The arrangement of parts may be determined from the photographs. C_1, underneath the chassis, is placed between the 815 socket

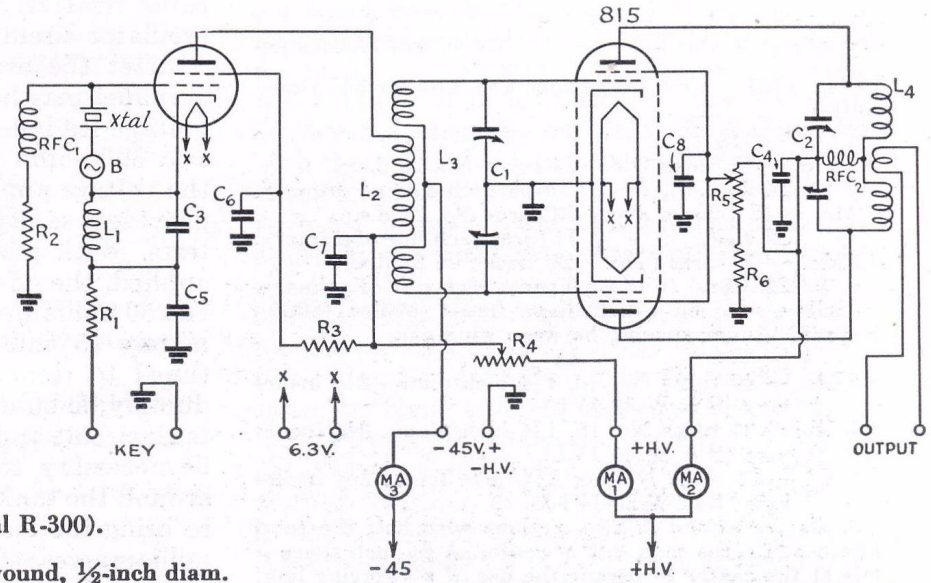

Fig. 1211 — Circuit diagram of the inexpensive 3-band transmitter.

C_1 — 140-$\mu\mu$fd. per section dual midget variable (Hammarlund HFD-140).
C_2 — 140-$\mu\mu$fd. per section dual midget variable (Hammarlund MCD-140-M).
C_3 — 200-$\mu\mu$fd. mica.
C_4 — 0.005-μfd. paper, 1600-volt rating.
C_5, C_6, C_7, C_8 — 0.01-μfd. paper, 600-volt rating.
R_1 — 200 ohms, ½-watt.
R_2 — 20,000 ohms, 1-watt.
R_3 — 20,000 ohms, 10-watt.
R_4 — 6000 ohms, 25-watt.
R_5, R_6 — 5000 ohms, 25-watt.
RFC_1 — 2.5-mh. r.f. choke (National R-100).
RFC_2 — 1-m.h. r.f. choke (National R-300).
B — 60-ma. lamp.
L_1 — 21 turns No. 24 d.s.c., close-wound, ½-inch diam. (See Fig. 1213 for specifications of L_2, L_3, and L_4.)

MA_1, MA_2 and MA_3 — Milliammeters with scales of 100, 300 and 25 ma., respectively.

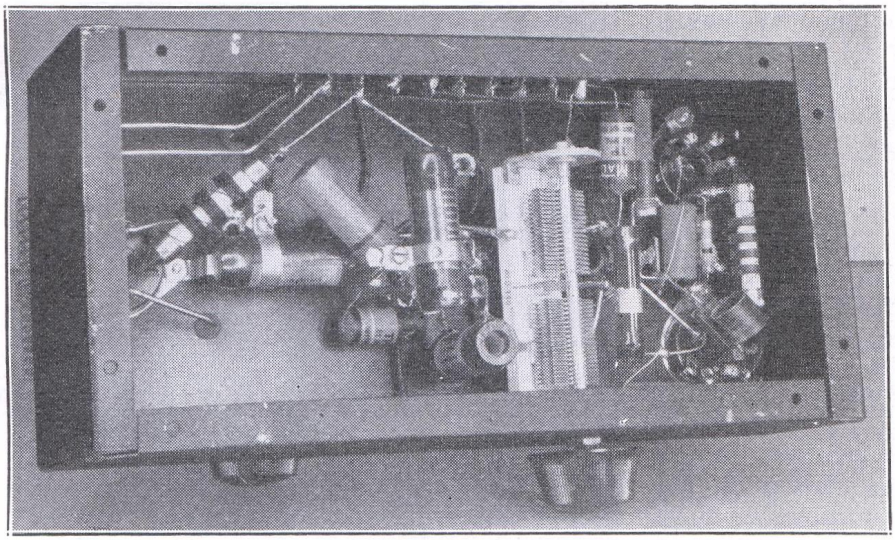

Fig. 1212 — Bottom view of the 815 transmitter, showing the location of C_1 and various small parts. The cathode coil, L_1, is wound self-supporting and soldered to the oscillator-tube socket. Normal power output at maximum plate voltage should be 50 to 55 watts.

and the coil socket for L_2 and L_3 so that the connections will be very short. The cathode coil is wound on a ½-inch diameter form, with a sheet of paper between the winding and the form to facilitate removal. Before removing, the winding is given a coating of Duco cement or coil dope. A terminal strip with 10 terminals is set in the rear edge of the chassis.

Tuning — This transmitter is designed to operate from a single plate supply delivering up to 500 volts at 200 ma. or more. The unit shown in Fig. 1214 will be satisfactory and will also furnish 6.3 volts for the heaters. A 45-volt "B" battery is also required for biasing the 815 to limit the plate current to a low value when the key is open.

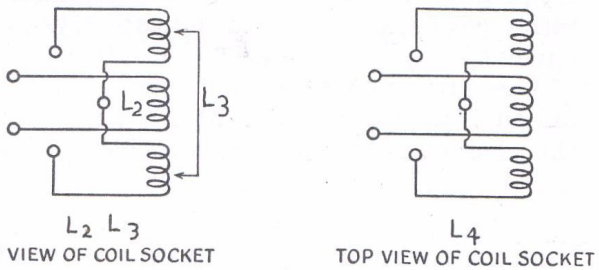

Fig. 1213 — Coil connections and data for 815 transmitter.

	L_2	L_3
3.5-Mc.	17 turns No. 24 d.s.c.	54 turns No. 28 d.s.c. 27 turns each side of primary.
7-Mc.	12 turns No. 22 d.s.c.	22 turns No. 22 d.s.c. 11 turns each side of primary.
14-Mc.	9 turns No. 22 d.s.c.	12 turns No. 22 d.s.c. 6 turns each side of primary.

Coils wound on 1-inch diam. forms (Millen 45005). Approx. ⅛-inch spacing between windings.

L_4

3.5-Mc. — 40 turns No. 18, 1⅞-inch diam., 2¼ inches long (B & W 80-JVL).
7-Mc. — 24 turns No. 16, 1⅞-inch diam., 2¼ inches long (B & W 40-JVL).
14-Mc. — 14 turns No. 16, 1⅞-inch diam., 2¼ inches long (B & W 20-JVL).

Coils are wound in two sections with half the total number of turns each side of center. A ⅜-inch space is left at the center to permit the use of a swinging link. The Barker and Williamson coils are mounted on five-prong bases of the type which plug in tube sockets.

Fig. 1211 shows how meters may be connected for tuning. Setting up for any one of the three bands is merely a case of plugging in the coils for the band desired, as indicated in Fig. 1213.

It is advisable to test the oscillator circuit first, and the plate and screen voltages should be removed from the 815 during this period. With voltage applied to the oscillator, the 815 grid circuit, C_1-L_3, should be brought to resonance, as indicated by maximum reading on a milliammeter connected in the amplifier grid-bias lead. The dropping resistor, R_4, should be set at its full value of 6000 ohms during the preliminary testing; to secure proper plate voltage a final setting may be made when the power supply is completely loaded by the entire transmitter. The grid current should be in the neighborhood of 10 milliamperes on all three bands. This may be adjusted by changing turns on L_2 or by detuning C_1, if grid current is excessive. The oscillator plate current will remain almost constant during this tuning, because relatively little power is taken from the oscillator circuit.

After the oscillator has been checked, the amplifier may be put into operation. The screen voltage lead should be tapped in between the two 5000-ohm resistors, R_5 and R_6 to reduce the voltage applied to the screen grid and thus provide a safety factor during the preliminary tests. With plate voltage and grid excitation applied, the off-resonance plate current should be 250 milliamperes or so, dropping to approximately 25 milliamperes with the plate circuit tuned to resonance. A load, such as a lamp dummy, should now be connected to the final tank circuit and the coupling adjusted (it may be necessary to wind a loop of several turns around the tank coil to obtain proper coupling) to bring the on-resonance plate current to 150 milliamperes. Oscillator-plate and amplifier screen-grid voltages may then be adjusted to 300 and 200 volts, respectively, by adjusting

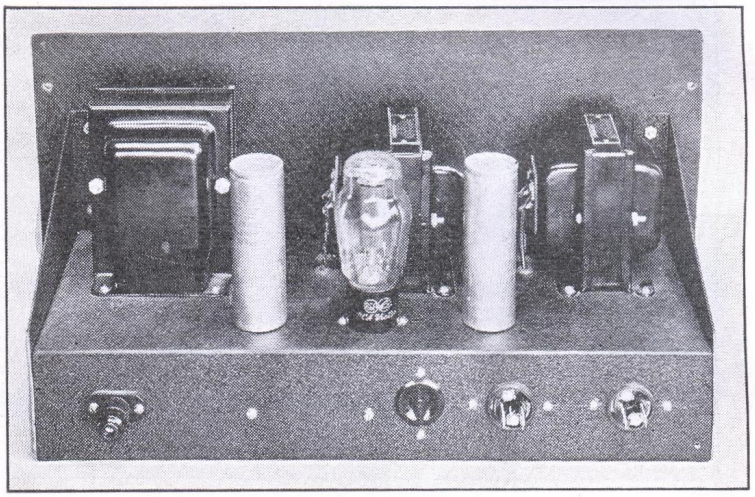

Fig. 1214 — This unit delivers either 450 or 560 volts at a full-load current of 200 ma. with 0.3% ripple and measured regulation of 16%. Taps are provided on the transformer secondary for the lower voltage. The chassis is 7 inches, by 17 inches, by 3 inches and the panel 8¾ inches by 19 inches. Only the terminals of the filament transformer and chokes appear above the chassis and these units are placed so that there is little danger of accidental contact. A 6.3-volt, 3-amp. transformer is included for heating filaments of r.f. tubes. It is mounted underneath the chassis and its output terminals are brought out to a 115-volt receptacle at the rear. The circuit diagram appears in Fig. 1215.

the taps on the two dropping resistors. It is probable that the amplifier plate current will either rise or fall at this point, depending upon whether the oscillator circuit and the 815 screen grid take more or less power than they did before. If the plate-current change is considerable, it will be wise to reset the final load and then make another check of the various voltages.

With all voltages at the proper values it is to be expected that the various currents will be about as follows: oscillator plate, 40 milliamperes; 815 grid, 4 or 5 milliamperes; 815 plate, 150 milliamperes. It will be found that a grid current of 4 to 6 milliamperes gives the best output and that more grid current fails to increase either the output or efficiency. A meter inserted in the amplifier screen-grid circuit should show a current of 60 milliamperes; about four-fifths of this is taken by the voltage divider.

When the transmitter is in actual operation, it may be observed that the amplifier plate current does not fall to complete cut-off when the excitation is removed. This is to be expected unless the power supply has such excellent regulation as to prevent any considerable increase in screen voltage when the load is greatly reduced. However, the plate current should drop to only a few milliamperes so long as the screen voltage does not reach a value which exceeds the normal voltage by more than 50 or 75 volts.

The amplifier plate coils are complete with links which permit working directly into a low-impedance line. This means that the amplifier may be fed into low-impedance (73 ohm) antenna feeders or that it may be link-coupled to an amplifier operating at higher input or to an antenna tuner for coupling to an antenna with tuned feeders. If desired, the oscillator circuit may be arranged for v.f.o. input as shown in Fig. 1260.

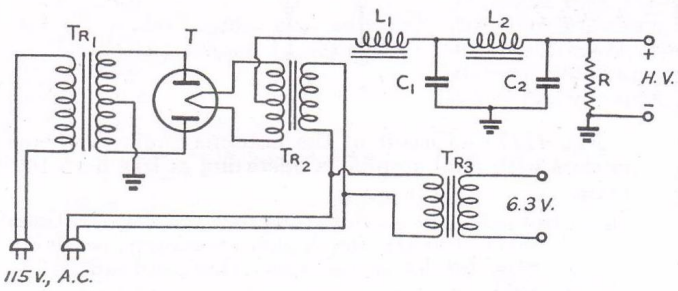

Fig. 1215 — Circuit diagram of the 450-volt supply shown in Fig. 1214.

C_1, C_2 — 8 μfd., electrolytic, 600-volt working (Mallory HS693).

L_1 — Input choke, 5-20 hy., 200 ma., 130 ohms (Thordarson T19C35).

L_2 — Smoothing choke, 12 hy., 200 ma., 130 ohms (Thordarson T19C42).

R — 20,000 ohms, 25 watts.

Tr_1 — 660 and 550 volts, r.m.s. each side of center, 250 ma. d.c. (Thordarson T19P55).

Tr_2 — 5 volts, 4 amp., 1600-volt insulation (Thordarson T63F99).

Tr_3 — 6.3 volts, 3 amp.

• LOW-POWER ANTENNA TUNER FOR RACK MOUNTING

In the low-power antenna tuner shown in Fig. 1216, separate series and parallel condensers are used. This arrangement, while requiring three condensers, has the advantage that no switching from series to parallel tuning is necessary. It also makes it possible to cover a wider range of conditions, because the series condensers may be adjusted in conjunction with the parallel condenser to shorten the electrical length of the feeders when this may be required to make parallel tuning effective. In addition, the series condensers provide a measure of control over loading when parallel tuning is used. Clips with flexible leads are provided for the parallel condenser, C_1, so that the sections may be connected either in parallel or in series to form either a high- or low-capacity tank circuit as required. When the high-C parallel tank is desired, the two stators are clipped together, as shown by the dotted lines in the circuit diagram of Fig. 1217, and the rotor connected to the opposite feeder. With the sections in series, the break-down voltage is increased.

Under the circuit diagram, two sets of con-

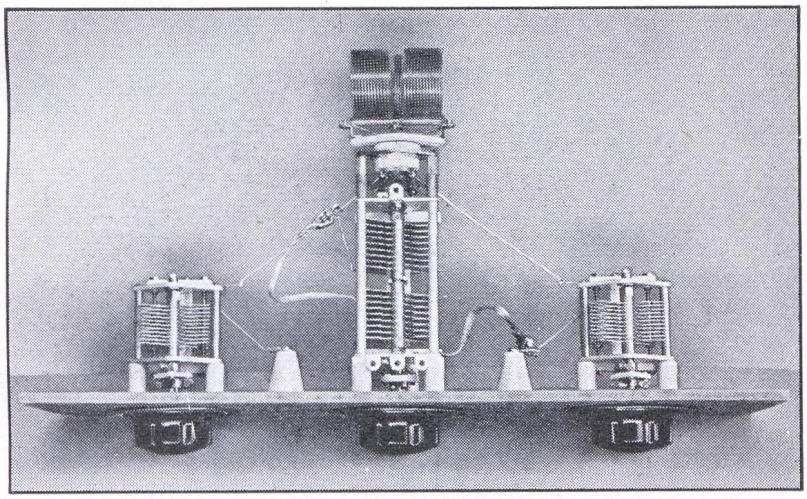

Fig. 1216 — A rack-mounting antenna tuner for low-power transmitters. The components are mounted on a 5¼-inch panel. The condensers are mounted off the assembly rods on National type GS-1 insulating pillars fastened to the condenser end plates with machine screws from which the heads have been removed. Small isolantite shaft couplings insulate the controls. The coil socket is fastened to the rear end plate of the parallel condenser with spacers to clear the prongs.

densers are suggested. The smaller condensers should be satisfactory for low-power transmitters operating at 400 to 450 volts, while the larger condensers will be required for higher voltages up to about 750 or 1000 volts.

• COMPLETE 70-WATT 3-BAND TRANSMITTER

The units shown in Figs. 1210, 1214 and 1216, with the addition of a 45-volt battery for bias, may be combined to form a complete transmitter. The smaller condensers listed for the antenna tuner may be used. If the transmitter is mounted on an 8¾-inch panel and 3½ inches is allowed for a meter panel, the complete transmitter will occupy a height of 26¼ inches if placed in a rack.

• A 90-WATT C.W. TRANSMITTER USING PUSH-PULL 6L6s

In the 90-watt c.w. transmitter shown in Figs. 1218 and 1220, a 6L6 Tri-tet oscillator drives a pair of 6L6s in a push-pull inverted amplifier circuit. The diagram appears in Fig. 1219.

The sockets for the crystal and cathode coil are wired as shown in Fig. 1260 to permit feeding with a v.f.o. unit if desired. The plate circuit of the oscillator is parallel-fed to permit grounding of the rotor of C_2 in mounting. A high-capacity tank condenser is used so that two bands may be covered with one coil to reduce coil-changing when shifting from one band to another. The cathode coil, L_5, by which the oscillator and amplifier are coupled, is center-tapped to provide push-pull input.

While neutralization is not required, a certain amount is introduced through the fixed condensers C_9 and C_{10} from plates to cathodes partially to nullify the effects of degeneration inherent in this type of circuit and thereby reduce excitation requirements. Neutralization is not carried to the point where there is danger of instability. All r.f.-wiring leads in the amplifier should be made as short and direct as possible. The individual grid condensers, C_7 and C_8, should be connected directly at each socket.

The output of the amplifier is link-coupled to an antenna tuner. The lower stator of C_4 is fitted with a flexible lead terminating in an insulated banana plug which may be plugged into any one of the antenna terminals which are jack-top binding posts. These posts are insulated from the chassis by mounting them in National polystyrene button-type insulators which have been drilled out. Series tuning

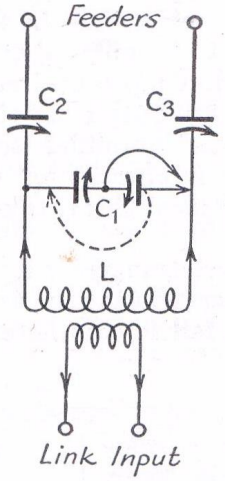

Fig. 1217 — Circuit of the antenna tuner for transmitters with final amplifiers operating at less than 1000 volts.

C_1 — 100 $\mu\mu$fd. per section, 0.045-in. spacing (National TMK-100-D) for higher voltages; receiving-type for lower voltages (Hammarlund MCD-100).

C_2, C_3 — 250 $\mu\mu$fd., 0.026-in. spacing (national TMS-250) for higher voltages; receiving-type for lower voltages (Hammarlund MC250).

L — B & W JVL series coils. Approximate dimensions for parallel tuning for each band as follows:
1.75-Mc. band — 56 turns No. 24.
3.5-Mc. band — 40 turns No. 20.
7-Mc. band — 24 turns No. 16.
14-Mc. band — 14 turns No. 16.
28-Mc. band — 8 turns No. 16.

All coils 1⅞-in. diameter, 2¼-in. long with variable link at center. For series tuning the coil for the next-higher-frequency band will be approximately correct.

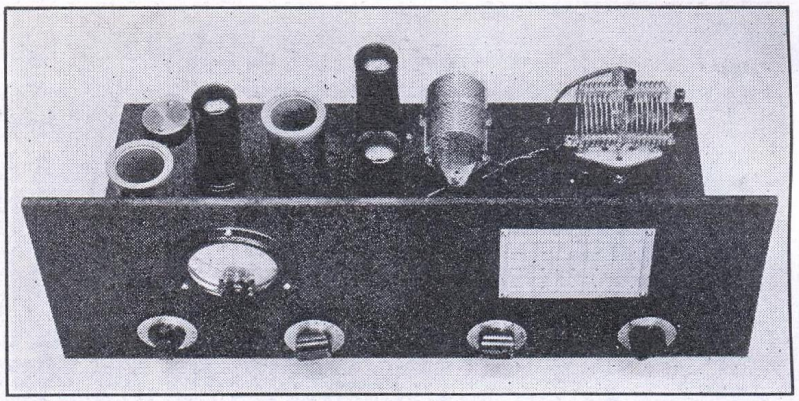

Fig. 1218 — The rack-width panel of the 90-watt 6L6 transmitter is 7 inches high. The milliammeter is switched from the oscillator to the amplifier by the rotary switch at the left. The three remaining controls are for tuning the oscillator-plate, amplifier-plate and antenna tank circuits. All sockets, except those for the amplifier- and antenna-tank coils are submounted. The three insulated terminals at the right rear are for antenna connections.

with high capacity is obtained by placing the plug in *1* and connecting the feeders to *2* and *3* and series tuning with low capacity by leaving the plug free and connecting the feeders to *2* and *3*. High-capacity parallel tuning is obtained by placing the plug in *1*, shorting *2* and

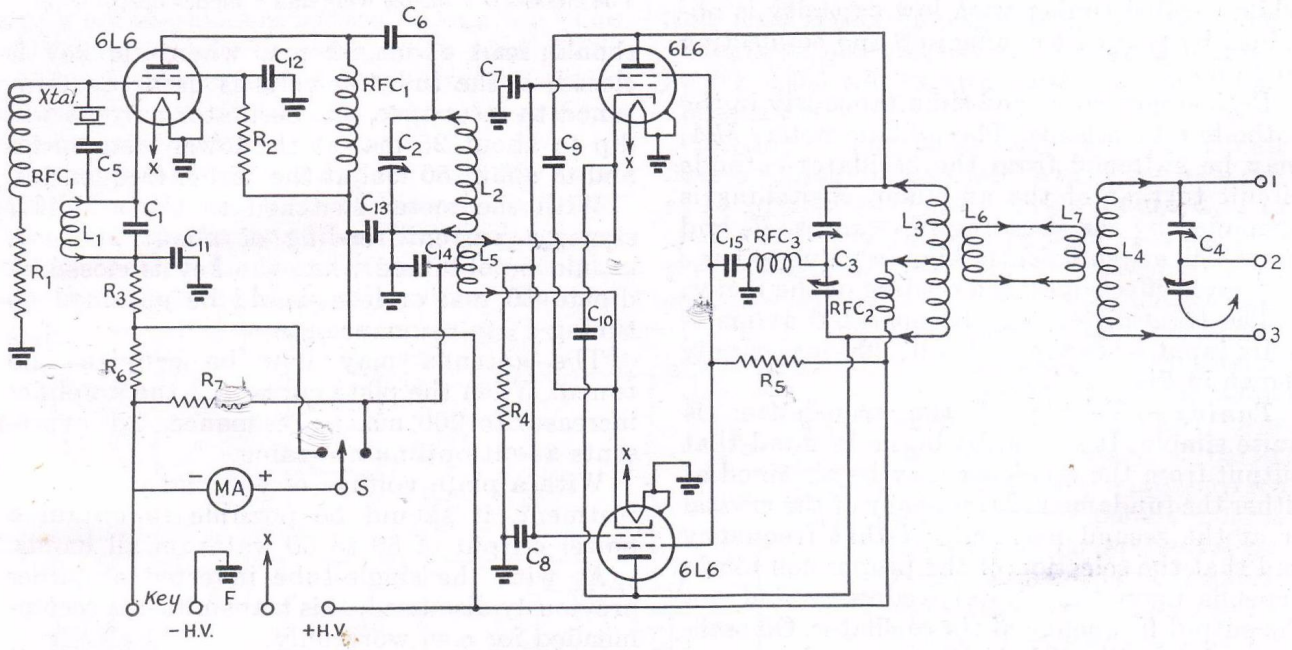

Fig. 1219 — Circuit diagram of the 90-watt 6L6 transmitter.

C_1 — 100 $\mu\mu$fd. mica.
C_2 — 250 $\mu\mu$fd. (National TMS-250).
C_3, C_4 — 250 $\mu\mu$fd. per section (Hammarlund MTCD-250-C).
C_5, C_6 — 0.001 μfd. mica.
C_7, C_8 — 50 $\mu\mu$fd. mica.
C_9, C_{10} — 10 $\mu\mu$fd. mica.
C_{11}, C_{12}, C_{13}, C_{14}, C_{15} — 0.01 μfd.
R_1 — 0.1 meg., ½-watt.
R_2 — 50,000 ohms, 2-watt.
R_3 — 500 ohms, 1-watt.
R_4 — 25,000 ohms, 1-watt.
R_5 — 12,000 ohms, 10-watt.
R_6, R_7 — 25 ohms, 1-watt.
MA — 0–300 milliammeter.
S — S.p.d.t. switch.
RFC_1 — 2.5-mh. r.f. choke, 100-ma.
RFC_2 — 1-mh. r.f. choke, 300-ma. (National R300).
RFC_3 — U.H.F. parasitic choke (Ohmite Z-1).

L_1* — 1.75-Mc. crystals: 32 turns No. 24 d.s.c., close-wound.
For 3.5-Mc. crystals: 10 turns No. 22, 1-in. long; 100-$\mu\mu$fd. mica condenser mounted in form, connected across winding.
For 7-Mc. crystals: 6 turns No. 22, ⅝-in. long.

L_2* — For 1.75- and 3.5-Mc. bands — 38 turns No. 18 d.c.c. close-wound.
For 3.5- and 7-Mc. bands — 20 turns No. 18, 1⅝-in. long.
For 7- and 14-Mc. bands — 9 turns No. 18, 1½-in. long.

L_3** — B & W JCL series coils, dimensions as follows:
1.75 Mc. — 60 turns No. 24, 2⅛-in. long.
3.5 Mc. — 44 turns No. 20, 2⅛-in. long.
7 Mc. — 26 turns No. 16, 2⅛-in. long.
14 Mc. — 16 turns No. 16, 1⅞-in. long.

L_4*** — B & W JVL series coils, dimensions as follows:
1.75 Mc. — 56 turns No. 24.
3.5 Mc. — 40 turns No. 20.
7 Mc. — 24 turns No. 16.
14 Mc. — 14 turns No. 16.
14 Mc. (series) — 8 turns No. 16.

L_5 — 1.75- and 3.5-Mc. bands — 20 turns, centertapped, No. 24 enam., close-wound, wound close to bottom of L_2 on same form.
3.5- and 7-Mc. bands — 14 turns, centertapped, No. 22 enam., close-wound, wound ⅛-in. from bottom of L_2 on same form.
7- and 14-Mc. bands — 8 turns, centertapped, No. 20 enam., close-wound, wound ⅛-in. from bottom of L_2 on same form.

L_6, L_7 — 3 turns at center of L_3 and L_4.

* All wound on Hammarlund 1½-in. diameter forms.
** All 1½-inches diameter.
*** All 1⅞-inch diameter, 2¼-inches long. Dimensions are approximate for parallel tuning for the band indicated. For series tuning the coil for the next-higher-frequency band is approximately correct.

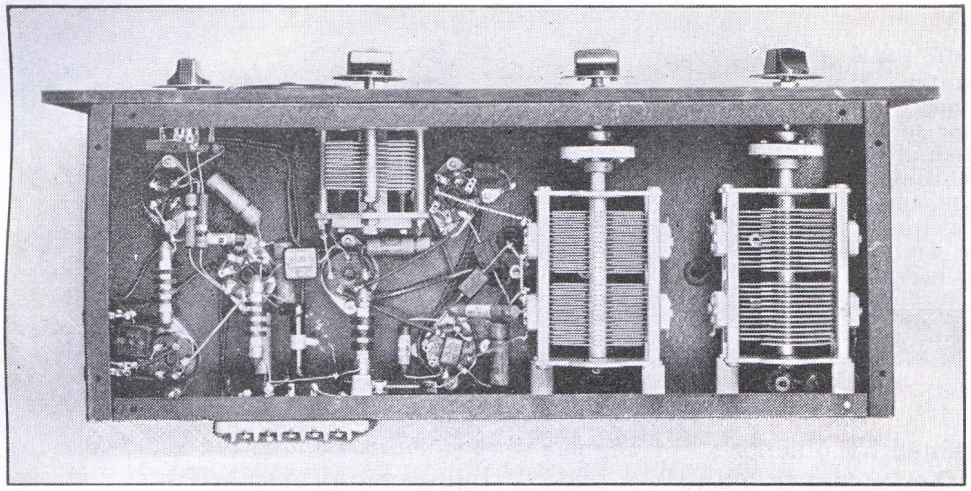

Fig. 1220 — The three tank condensers are mounted underneath the chassis of the 90-watt transmitter. The two split-stator condensers are mounted from the rear edge of the chassis with National GS-1 insulating pillars and their shafts are fitted with insulating coupling and panel bearings. They are mounted so that their shafts come level with that of C_2 to the left, which is mounted directly on the chassis without insulation. Heavy bare-wire leads passing through grommeted holes in the chassis connect the amplifier and antenna tank condensers with their coils on top. The chassis is 7 inches wide and 3 inches deep.

3 and connecting the feeders between *1* and *3*, while parallel tuning with low capacity is obtained by placing the plug in *3* and connecting to *1* and *3*.

Both stages are keyed simultaneously in the cathode return leads. The milliammeter, *MA*, may be switched from the oscillator-cathode circuit to that of the amplifier. Switching is simplified by the shunting resistances, R_6 and R_7, which are sufficiently high in value to have negligible effect upon the reading of the meter.

The transmitter may be operated at maximum input from the 450-volt, 200-ma. supply shown in Fig. 1214.

Tuning — Tuning of the transmitter is quite simple. It should be borne in mind that output from the oscillator may be obtained at either the fundamental frequency of the crystal or at the second harmonic of that frequency and that the selection of the proper coil for L_1 depends upon the crystal frequency and not the output frequency of the oscillator. On oscillator plate coils listed, the lowest-frequency band will be found near maximum capacity of C_2, while the higher-frequency bands will be found near minimum capacity. With the meter switched to the oscillator circuit, the meter should read about 60 ma. when the key is closed, if the full 450 volts is used. As C_2 is tuned to resonance, the oscillator current will dip to about 25 ma. at the lower frequencies and to about 50 ma. at the higher frequencies.

With the meter switched to the amplifier stage, a current reading of about 260 ma. should be obtained when the key is closed. A dip to 50 ma. or less should be obtained on tuning C_3 to resonance.

The antenna may now be coupled and tuned. When the plate current of the amplifier increases to 200 ma. at resonance, this represents about optimum loading.

With a plate voltage of 450 and proper adjustment, it should be possible to obtain a power output of 50 to 60 watts on all bands.

As with the single-tube inverted amplifier previously discussed, this transmitter is recommended for c.w. work only.

• COMPLETE 90-WATT C.W. TRANSMITTER

The r.f. unit of Fig. 1218 may be combined with the power-supply unit of Fig. 1214 (6.3-volt transformer included) to form a complete transmitter. The two units will have a combined height of 15¾ inches in a standard rack.

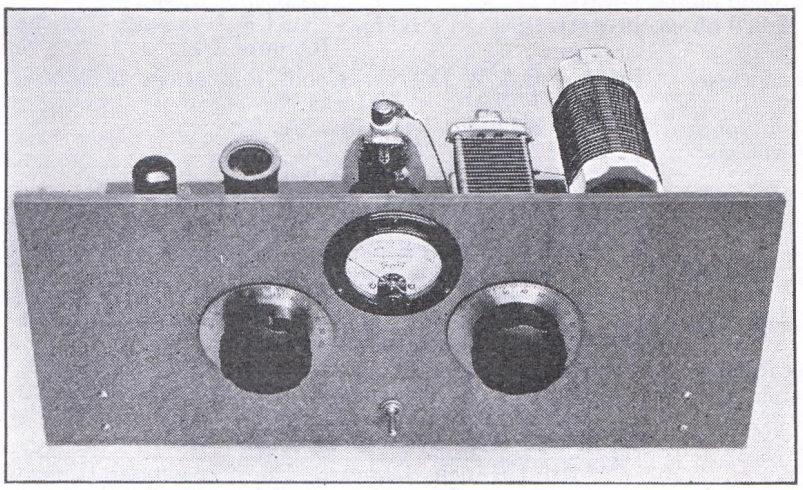

Fig. 1221 — Front view of the 200-watt beam-tube transmitter. The panel is 8¾ inches high.

• A TWO-STAGE 200-WATT BEAM-TUBE TRANSMITTER

The simplicity of the 200-watt transmitter shown in Figs 1221, 1222 and 1224 will appeal to many amateurs. As the circuit of Fig. 1223 shows, a 6L6 Tri-tet oscillator supplies excitation at either the crystal fundamental frequency or its second harmonic for the HY67 in the output stage. Since the latter is a screened tube, no neutralizing is required. Parallel feed is used in the oscillator circuit to permit mount-

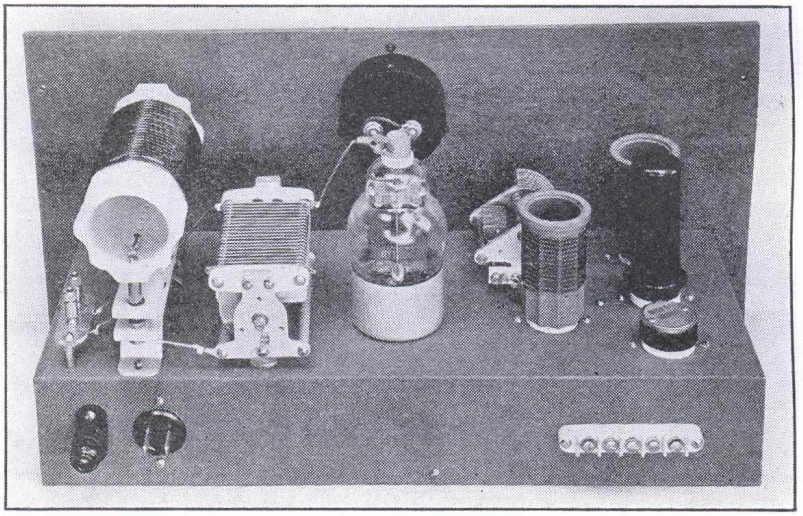

Fig. 1222 — The cathode coil, oscillator tube and crystal of the 200-watt beam-tube transmitter are in line at the right. The socket for the HY67 is sunk an inch below the chassis level to shorten the plate lead and the bottom portion of the tube is shielded with a section of Hammarlund PTS tube shield. The amplifier plate tank condenser is insulated from the chassis with National polystyrene button-type insulators at the three mounting feet.

ing C_2 on the chassis without insulation. The milliammeter may be switched to read either oscillator- or amplifier-cathode current. R_5 is inserted in series with the screen to prevent parasitic oscillation.

Power Supply — A unit delivering 300 volts is required for the plate of the oscillator and the screen of the amplifier. This voltage, as well as a fixed biasing voltage of 75 for the amplifier, may be obtained from the combination unit shown in Fig. 1237 with the components for 300-volt output. The supply shown in Fig. 1225 will furnish plate voltage for the amplifier.

Tuning — The simplicity of the circuit makes tuning an easy job. With a cathode coil at L_1 appropriate for the crystal in use, and an oscillator plate coil at L_2 which covers the crystal frequency with C_2 near maximum, the oscillator is tuned to either the fundamental frequency of the crystal frequency near the maximum of C_2 or to the second harmonic of the crystal frequency near minimum capacity of C_2 by the customary plate-current dips. The key should not be kept closed for prolonged periods during this adjustment unless the 300-volt lead to the screen of the amplifier is disconnected. If the plate-current dips indicating both fundamental and harmonic are not found, it may be necessary

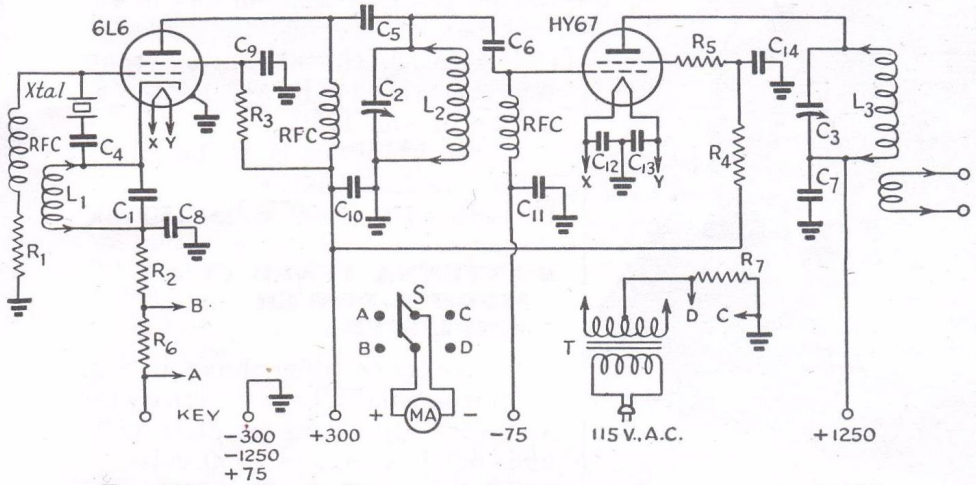

Fig. 1223 — Circuit diagram of the 200-watt beam-tube transmitter.

C_1 — 100 $\mu\mu$fd., mica.
C_2 — 300 $\mu\mu$fd., variable (National TMS-300).
C_3 — 250 $\mu\mu$fd., variable, 0.045-in. spacing (National TMK-250).
C_4, C_5 — 0.001 μfd., mica.
C_6 — 100 $\mu\mu$fd., mica.
C_7 — 0.001 μfd., mica, 5000-volt test.
C_8, C_9, C_{10}, C_{11}, C_{12}, C_{13}, C_{14} — 0.01 μfd.
MA — Milliammeter, 300-ma. scale.
R_1 — 0.1 meg., ½-watt.
R_2 — 500 ohms, 1-watt.
R_3 — 50,000 ohms, 10-watt.
R_4 — 2000 ohms, 10-watt.
R_5 — 50 ohms, 1-watt.
R_6 — 25 ohms, 1-watt.
R_7 — 25 ohms, 10-watt.
RFC — 2.5-mh. r.f. choke.
S — Double-pole double-throw toggle switch.
T — Filament transformer, 6.3-volts, 6-amps. (Thordarson T19F98).
L_1 — 1.75-Mc. crystals — 32 turns No. 24 d.s.c., close-wound.
3.5-Mc. crystals — 10 turns No. 22, 1-in. long; 100-$\mu\mu$fd. mica condenser mounted in form and connected across winding.
7-Mc. crystals — 6 turns No. 22, ⅝-in. long.
L_2 — 1.75- and 3.5-Mc. bands — 30 turns No. 20 enam., 1½-in. long.
3.5- and 7-Mc. bands — 15 turns No. 18 enam., 1½-in. long.
7- and 14-Mc. bands — 6 turns No. 18 enam., ⅞-in. long.
All above coils wound on Hammarlund 1½-in. diameter coil forms.
L_3 — 1.75-Mc. band — 32 turns No. 18 d.c.c., 3½-in. long.
3.5-Mc. band — 20 turns No. 12, 3-in. long, turns wound in successive grooves.
7-Mc. band — 9 turns No. 12, 1⅜-in. long, turns wound in successive grooves.
14-Mc. band — 6 turns No. 12, 1¾-in. long, turns wound in alternate grooves.
All above wound on National XR-10A 2½-in.-diameter coil forms. The form for the 1.75-Mc. coil is covered with a sheet of cardboard before winding. Number of link turns should be adjusted for proper loading.

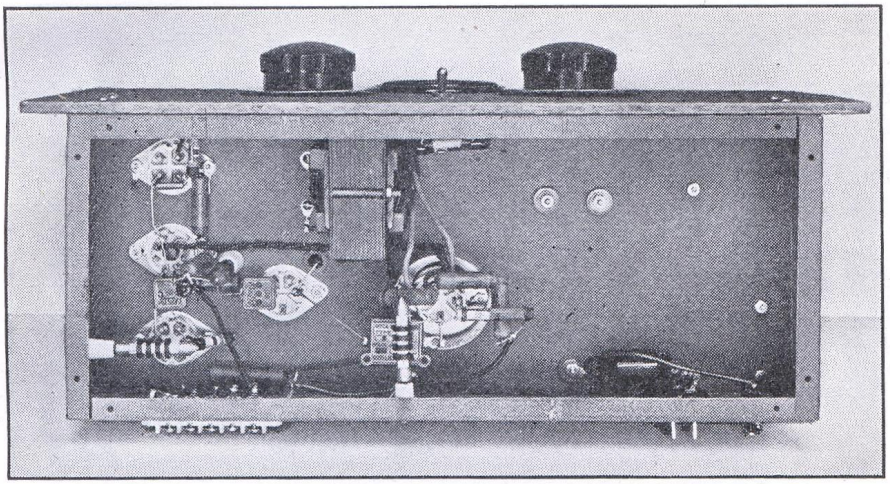

Fig. 1224 — There is plenty of room underneath the 3-inch, by 7-inch, by 17-inch chassis of the 2-stage beam-tube transmitter for the filament transformer and small components.

to add or subtract a turn or two from L_2 so that the range will be centered to cover both.

The amplifier is simply tuned to resonance with the proper coil for the desired output frequency in place by switching the meter to read amplifier cathode current. The amplifier may then be link-coupled to an antenna tuner, such as the one shown in Fig. 1226, and loaded in the usual way. As a matter of fact, it is preferable to tune the amplifier with the load connected, after one has become accustomed to the tuning procedure, so as to limit screen heating.

Under normal conditions, the oscillator cathode current will run between 35 and 40 ma. when tuned to resonance in any band, while the cathode current of the amplifier should be about 225 ma. when fully loaded. This total cathode current will include screen current of about 30 ma. and grid current of about 20 ma. The oscillator screen voltage should be between 175 and 200 volts, while the amplifier screen voltage will run about 240 volts with the amplifier tuned and loaded.

Power output of 130 to 150 watts should be obtainable on any of the four bands covered.

If desired, the oscillator circuit may be arranged for v.f.o. input as shown in Fig. 1260.

If the amplifier is to be plate-screen modulated, the input should be reduced to 1000 volts, 150 ma.

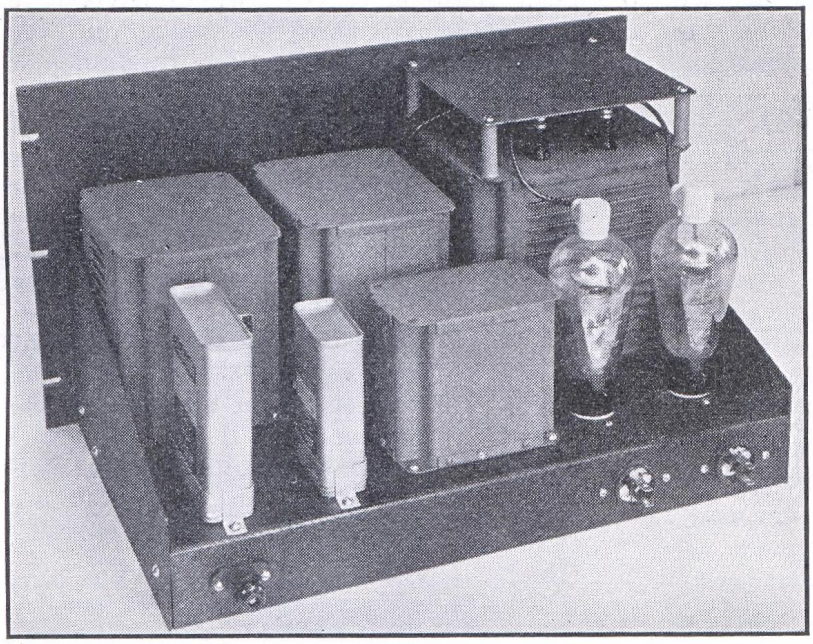

Fig. 1225 — This unit delivers 830, 1060 or 1250 volts at full-load current of 250 ma. Voltages are selected by taps on the secondary. Ripple is reduced to 0.25% and regulation checked at 10%. All high-voltage terminals, except those of the transformer secondary and tube caps, are underneath the chassis. The transformer terminal board is covered with a section of steel panel mounted on pillars at the four corners. Insulating caps are provided for the tube plate terminals. A Millen safety terminal protects the high-voltage connection. The chassis is 11 inches, by 17 inches, by 2 inches and the panel 10½ inches, by 19 inches.

The circuit for this supply is the same as that shown in Fig. 1246 with the following values:

C_1 — 2 μfd., 1500-volt (Aerovox Hyvol).
C_2 — 4 μfd., 1500-volt (Aerovox Hyvol).
L_1 — Input choke, 5-25 hy., 300 ma., 90 ohms (UTC S34).
L_2 — Smoothing choke, 15 hy., 300 ma., 90 ohms (UTC S33).
R — 25,000 ohms, 100 watts.
Tr_1 — 1500-1250-1000 volts, r.m.s. each side of center, 300 ma. d.c. (UTC S47).
Tr_2 — 2.5 volts, 10 amp., 10,000-volt insulation (UTC S57).

• ANTENNA TUNER FOR MEDIUM-POWER AMPLIFIERS

The antenna tuner shown in Fig. 1226 will usually be satisfactory for amplifiers operating at plate voltages not in excess of 1250 volts.

The two condensers are mounted from the panel by means of insulating pillars from National GS-1 insulators fastened to the end plates with small sections of machine screws from which the heads have been cut. The variable-link coil is mounted between the two rear end plates. The size of the coil is varied by short-circuiting turns with the clips attached to the condensers with flexible leads. As the circuit of Fig. 1227 shows, the condensers are connected in parallel when the second pair of clips connects each rotor to the stator of the opposite condenser. The feeders are connected to the two large standoff insulators mounted on the panel.

• COMPLETE 200-WATT TRANSMITTER OF TWO STAGES

The units of Figs. 1221, 1225 and 1226 may be combined with that of Fig. 1236 to form a complete transmitter which will occupy a total height in a relay rack of 31½ inches. Plate voltage for the oscillator and screen and bias supply for the HY67 are obtained from the unit of Fig. 1236 (values for 300-volt output), which may be mounted on a 7-inch panel. 1250 volts for the plate of the HY67 is obtained from the unit shown in Fig. 1225.

• A SIMPLE 200-WATT TRANSMITTER FOR THE 1.75- AND 3.5-MC. BANDS

The transmitter shown in Figs. 1228, 1229 and 1231 illustrates how construction may be simplified when operation in only one or two bands is required. In the circuit, shown in Fig. 1230, a 6L6 Tri-tet oscillator is employed to drive a pair of 809s in pushpull. While the circuit is designed primarily for 1.75- and 3.5-Mc. output with 1.75-Mc. crystals, 3.5-Mc. crystals may be used for 3.5-Mc. output by closing S_1 which short-circuits the cathode tank coil.

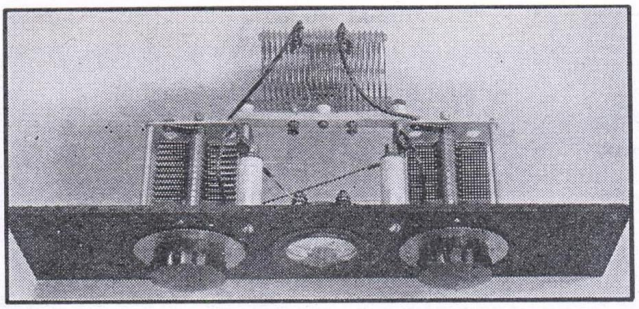

Fig. 1226 — A link-coupled antenna-tuning unit for use with resonant feed systems and medium-power amplifiers. The inductance, with variable link, is mounted on the condenser frames. Clips are provided for changing the number of turns, and for switching the condensers from series to parallel. The panel measures 5¼ by 19 inches.

The two stages are coupled capacitively and, since no coil changing is required, all coils are permanently mounted. In the oscillator circuit, change from band to band is made by the condenser C_2 which has sufficient range to cover both bands with the same coil. In the amplifier circuit, portions of the plate tank coil are short-circuited with clip leads when operating at 3.5 Mc. Johnson clamp-type coil clips are used to mark the portions of the coil which are to be short-circuited and to provide good contacts to which the battery clips on the shorting leads may be attached without fussing.

Parallel plate feed is used in the oscillator so that the amplifier grids may be series fed to eliminate the possibility of low-frequency parasitic oscillations with chokes in both grid and plate circuits. The fixed condenser, C_9, is for the purpose of compensating for the output capacity of the 6L6 to equalize excitation to the grids of the 809s.

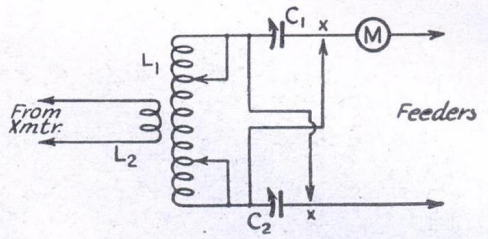

Fig. 1227 — Circuit diagram of the antenna-tuning unit for medium-power transmitters.
C_1, C_2 — 100 $\mu\mu$fd., 0.07-inch spacing (National TMC-100).
L_1 — 22 turns No. 14, diameter 2¾ inches, length 4 inches (Coto with variable link).
L_2 — 4 turns rotating inside L_1.
M — R.f. ammeter, 0–2.5 for medium-power transmitters.

An antenna tuner is included in the unit. If parallel tuning is required, the free stator of C_4 will be clipped to the free end of L_4 and the feeders connected one to each of the condenser stators. If series tuning is desired, the two stators are clipped together and one feeder clipped to the rotor and one to the coil, as indicated in the circuit diagram. Inductance is changed by the system of short-circuiting clips used in the final tank circuit.

The switch, S_2, enables the milliammeter to be shifted to read oscillator plate current, amplifier grid current or amplifier plate current. To permit easy reading of the low currents in the oscillator-plate and amplifier-grid circuits, a meter with a scale of 100 ma. is used. When the switch is turned to read amplifier plate current, a shunt, R_7, is connected across the meter to multiply the scale reading by four times. This shunt is wound with No. 24 enameled wire.

Power Supply — The oscillator requires a plate voltage of 450, while the amplifier operates from a 1000-volt supply for full c.w. output. A 22½-volt "B" battery is required for fixed bias for the amplifier. The 450-volt unit shown in Fig. 1203 will be suitable for the oscillator, while the supply pictured in Fig. 1225 will furnish power for the amplifier. The 1000-volt secondary taps should be used.

Tuning — Plate voltage should not be applied to the amplifier until the oscillator has been tuned and the amplifier neutralized. An active 1.75-Mc. crystal will oscillate with C_2 set at any position. Off resonance, the oscillator plate current should run in the neighborhood of 100 ma. Two dips in plate current will be found over the range of the condenser. The one near maximum capacity indicates resonance at the crystal fundamental and the one near minimum capacity indicates the second harmonic of the crystal frequency. At minimum dip the plate current should run between 80 and 90 ma. By switching the meter to the second posi-

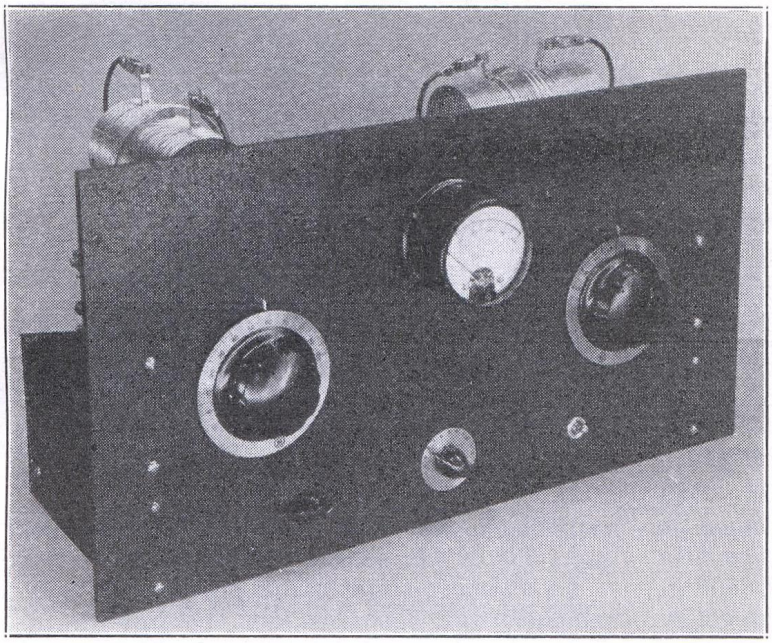

Fig. 1228 — A simple 200-watt transmitter for 160 and 80. The two large dials are for the amplifier and antenna tank circuits. The small control at the lower center is for the oscillator tank circuit, with the meter and cathode-circuit switches at either side. The short-circuiting clips for 3.5-Mc. operation are in place. The panel measures 10½ by 19 inches.

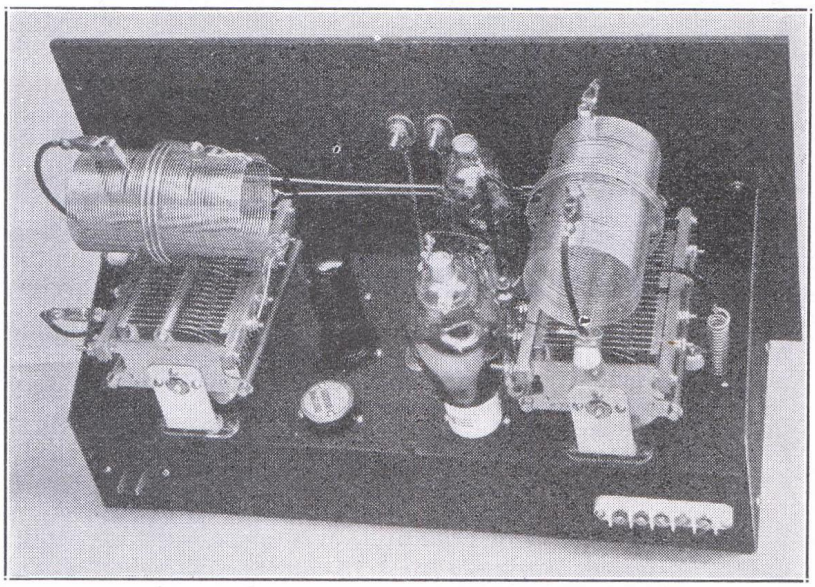

Fig. 1229 — Rear view of the 200-watt, two-band transmitter. The antenna tank condenser to the left and the amplifier tank condenser to the right are mounted on metal brackets insulated from the chassis with pairs of National FWB polystyrene terminal strips at front and back. Strips of the same type are cut in half to form insulating bushings for the meter, which is mounted by its terminal studs. The neutralizing condensers are between the 809s. The power plug to the left is for the filament transformer underneath. The chassis is 7 inches, by 3 inches, by 17 inches.

tion, it will be found that readings of grid current are obtained at each of these resonance points.

If a 3.5-Mc. crystal is used, S_1 will be closed and only the one point of resonance will be found near minimum capacity. It will also be noticed that the circuit will oscillate only when the tank circuit is tuned near resonance and that a slight detuning toward the low-capacity side of C_2 will be required for reliable keying.

With C_2 adjusted for maximum grid current at the fundamental, the amplifier should be neutralized by adjusting both neutralizing condensers in small steps, keeping their capacities equal at all times. A check on the neutralizing adjustment may be made by any of the usual methods, such as test with a neon bulb touched to one end of the plate tank coil, which should not glow at any point in the range of the amplifier tank condenser, except possibly at minimum capacity. Another test is that of observing the grid-current reading. When the amplifier is completely neutralized, swinging the amplifier tank condenser through its range should cause no change in grid current. When not neutralized, the grid current will show a sharp dip when the plate tank condenser is tuned through resonance.

Plate voltage may now be applied to the amplifier and the plate circuit tuned to resonance. It is advisable to make preliminary adjustments at reduced plate voltage. Voltage may readily be reduced by connecting a 150- or 200-watt lamp in series with the primary winding of the plate transformer. Minimum amplifier plate current (with the meter in the third position) as the plate tank circuit is tuned will indicate resonance. The value of plate current at the minimum will depend somewhat upon the setting of the antenna tank condenser but, by keeping the antenna circuit tuned well away from resonance, a

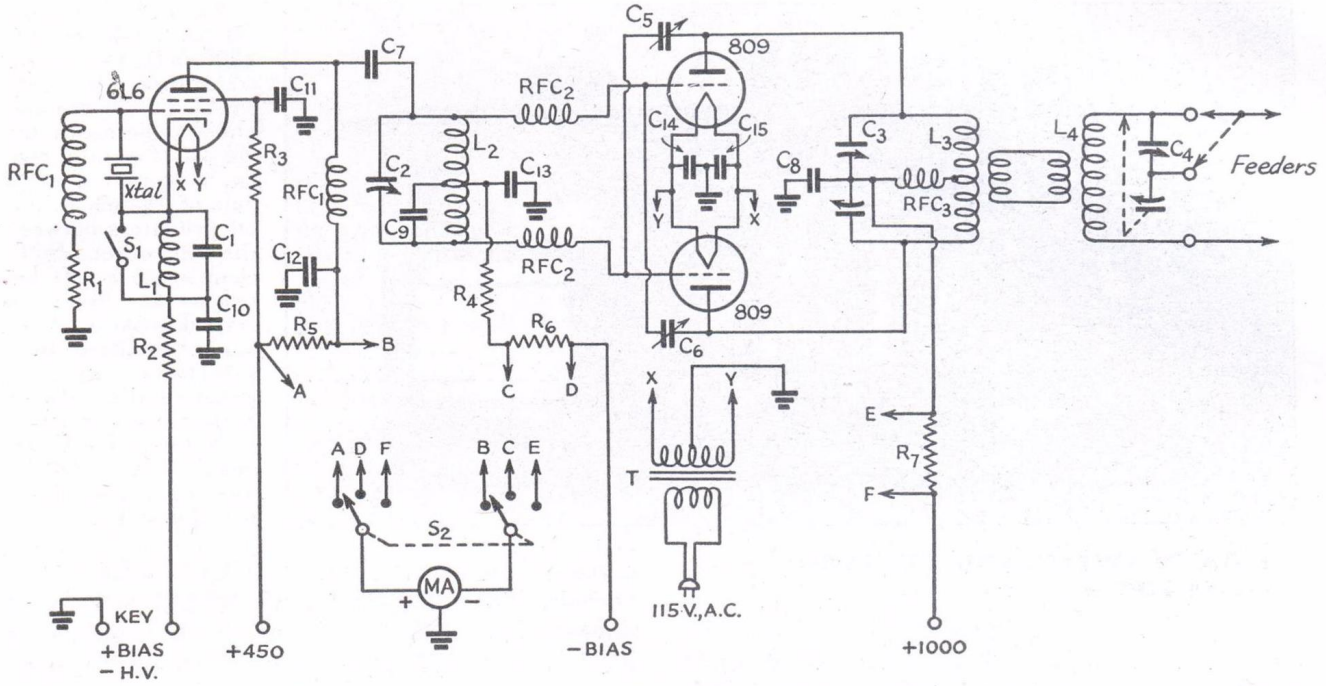

Fig. 1230 — Circuit diagram of the 200-watt, two-band transmitter.

C_1 — 100 $\mu\mu$fd., mica.
C_2 — 250 $\mu\mu$fd. variable (National STH-250).
C_3, C_4 — 200 $\mu\mu$fd. per section. 0.07-inch spacing (Cardwell XT-210 PD).
C_5, C_6 — Neutralizing condensers (Millen 15003).
C_7 — 500 $\mu\mu$fd. mica.
C_8 — 0.001 μfd., mica, 5000 volts test.
C_9 — 50 $\mu\mu$fd., mica (see text).
C_{10}, C_{11}, C_{12}, C_{13}, C_{14}, C_{15} — 0.01 μfd.
MA — Projection-type milliammeter, 0-100-ma. scale (Triplett Model 324).
R_1 — 50,000 ohms, 1-watt.
R_2 — 200 ohms, 2-watt.
R_3 — 25,000 ohms, 10-watt.
R_4 — 800 ohms, 10-watt.
R_5, R_6 — 25 ohms, 1-watt.
R_7 — Meter-shunting resistance (see text).
RFC_1 — 2.5-mh. r.f. choke.
RFC_2 — U.h.f. parasitic choke, 20 turns No. 20, ¼-inch diameter, closewound.
RFC_3 — 1-mh. r.f. choke, 300-ma., (National R-300).
S_1 — S.p.s.t. toggle switch.
S_2 — 2-gang, 3-circuit high-voltage switch (Mallory 162C).
T — Filament transformer, 6.3 volts, 6 amp. (Kenyon T387).
L_1 — 40 turns No. 24 d.s.c., 1-inch diam., close-wound.
L_2 — 50 turns, 1¼-inch diam., 1⅝-inch long (National AR-80-C, unmounted, no link, 2 turns removed from each end), 50 uhy. inductance.
L_3 — 54 turns No. 16, 2½ inches diam., 4½ inches long, tapped 10 turns from each end for 3.5 Mc. (B & W) 160TA, unmounted, 80 uhy. inductance.
L_4 — Same as L_3, taps adjusted as required.

reading of less than 50 ma. should be obtained.

Tests should now be made to make certain that the oscillator will key satisfactorily. If the crystal does not pick up readily, a slight retuning of C_2 should remedy the trouble.

Tuning the transmitter for 80-meter output is now a simple matter of tuning the oscillator to the resonance dip near the minimum of C_2, placing the short-circuiting clips on L_3 and tuning C_3 for resonance. The shift from one band to another should take but a few seconds.

The amplifier may be loaded until the total plate current reaches 200 ma. When loaded, the grid current should not fall below 60 ma.

If the plate of one amplifier tube shows color, while the other remains cool, it is an indication that the excitation is unbalanced, which would call for an adjustment of C_9. If the plate of the tube whose grid is connected to the same end of L_2 as the plate of the 6L6 shows color, the capacity of C_9 should be increased, while color in the other amplifier tube would require a reduction in capacity. In any case, the value will not be critical within 10 or 20 $\mu\mu$fd. and the value of C_9 specified should be satisfactory in most cases.

Normal power output will be approximately 150 watts on either band.

If the amplifier is to be plate modulated, the plate voltage should be reduced to 750 volts when the output will be reduced to about 100 watts.

The oscillator circuit may be arranged for v.f.o. input as shown in Fig. 1260.

• COMPLETE TWO-STAGE 200-WATT TRANSMITTER FOR THE 1.75- AND 3.5-MC. BANDS

The transmitter of Fig. 1228 may be combined with the power-supply units of Figs. 1203 and 1225 in a complete unit with the addition of a 22.5-volt battery for bias. If the unit of Fig. 1203 and the bias battery are mounted behind a 7-inch panel, the total rack height required will be 28 inches. The unit of Fig. 1203 supplies the oscillator, while the plate voltage from the amplifier may be obtained from the unit of Fig. 1225.

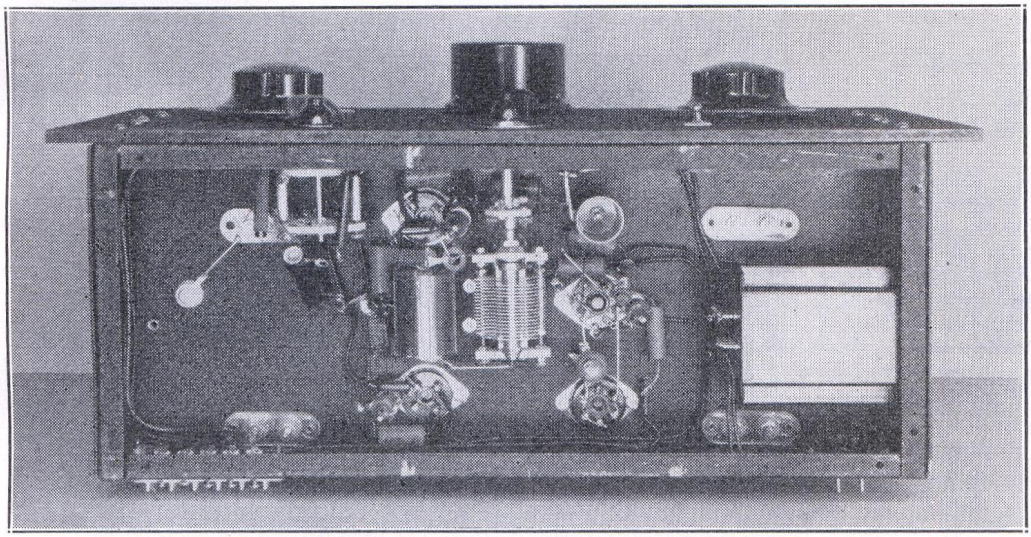

Fig. 1231 — The oscillator tank of the 200-watt, two-band transmitter is well-shielded from the amplifier underneath the chassis. The tank coil, L_2, is mounted on a pair of ½-inch stand-off insulators between the 809 sockets. Sufficient space is left between the 6L6 and crystal sockets to allow the oscillator tank condenser, C_2, to be mounted at the center of the chassis on a pair of National FWB terminal strips as insulators. L_1 is just above the 6L6 socket.

• A BAND-SWITCHING EXCITER WITH 807 OUTPUT

The exciter or low-power transmitter pictured in Figs. 1232, 1234 and 1235 is designed for flexibility in being adaptable to all bands from 1.75 to 28 Mc., with crystals cut for different bands, and also for quick band changing over three bands. It consists of a 6C5 triode oscillator followed by two triode doubler stages in one tube, a 6N7; by means of a switch, the output of any of the three stages can be connected to the grid of the final tube, an 807 beam tetrode. A band-switching plug-in coil assembly changes tank coils in the 807 plate circuit. The circuit diagram is given in Fig. 1233.

The oscillator, first and second doubler plate coils, L_1, L_2 and L_3 respectively, need not be changed for crystals ground for a given band. The switching circuit is so arranged that the grids of unused stages are automatically disconnected from the preceding stage and grounded so that excitation is not applied to the idle tubes.

Capacity coupling between stages is used throughout. The plates of the first three stages are parallel-fed so that the plate tuning condensers can be mounted directly on the metal chassis. The 6C5, 6N7 and the 807 screen all operate from a 250-volt supply. Series feed is used in the 807 plate circuit, the tank condenser being of the type which is insulated from the chassis. Fixed bias of about 75 volts is used on the 807 grid.

Sockets are provided for seven crystals, with a switch to select the desired frequency. Plate currents for all tubes and screen current for the 807 are read by a 200-ma. meter which can be switched to any circuit by means of S_4.

Keying is in the oscillator cathode circuit for break-in operation. Since in normal operation the crystal tank circuit, C_1L_1, is tuned well on the high-frequency side of resonance, there is a tendency for the first doubler section to break into a tuned-grid tuned-plate type of oscillation when the key is up; this is prevented by a small amount of inductive neutralization provided by the single-turn coils L_5 and L_6, wound as closely as possible to the ground end of each tank coil. The 28-Mc. coil does not need such a neutralizing winding since it is used only in the second doubler stage. L_5 and L_6 should be connected in such a way as to prevent self-oscillation of the first 6N7 section when the key

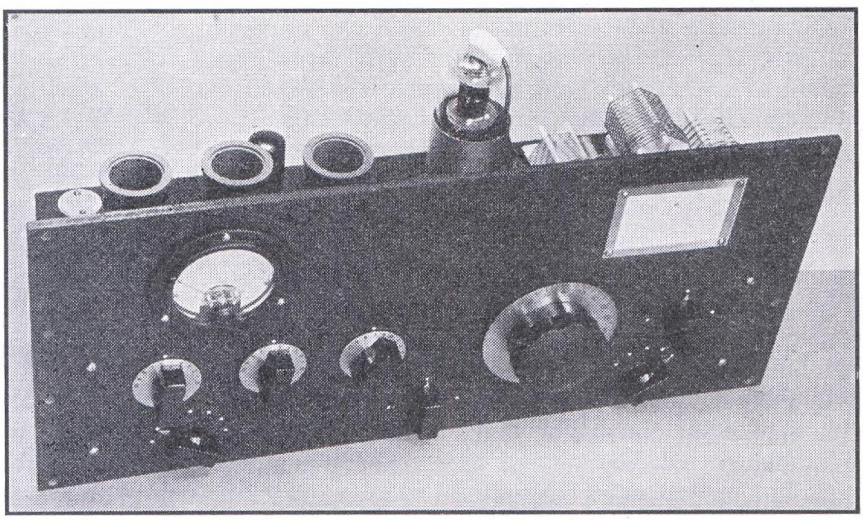

Fig. 1232 — An 807 exciter or low-power transmitter combining the flexibility of plug-in coils with the convenience of band-switching. Crystal switching and meter switching also are provided.

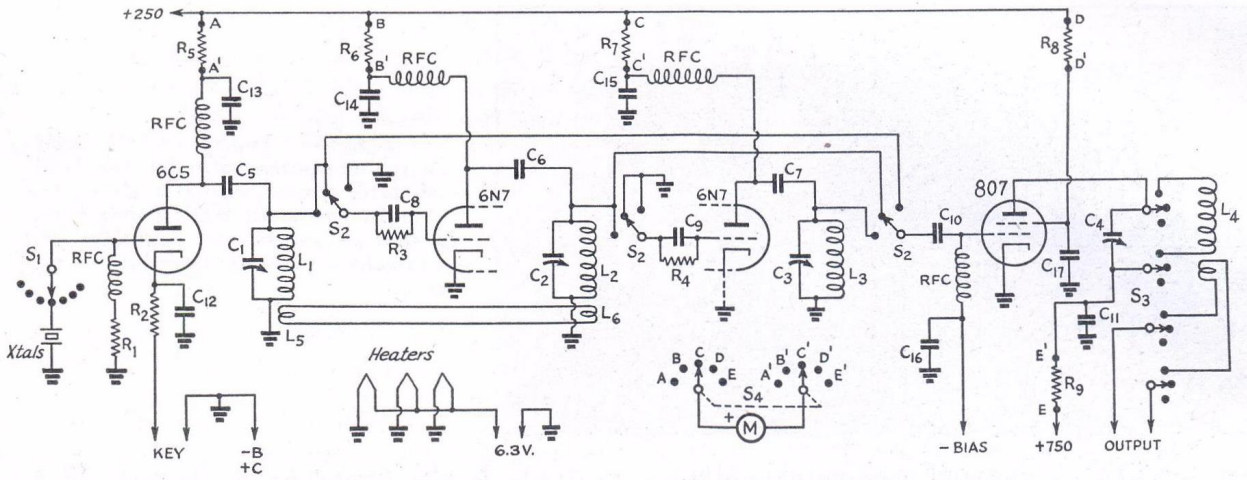

Fig. 1233 — Circuit diagram of the 807 band-switching exciter.

C_1, C_2, C_3 — 100-$\mu\mu$fd. variable (National ST-100).
C_4 — 150-$\mu\mu$fd. variable, 0.05" spacing (Hammarlund HFB-150-C).
C_5, C_6, C_7 — 0.002-μfd. mica, 500-volt.
C_8, C_9, C_{10} — 100-$\mu\mu$fd. mica, 500-volt.
C_{11} — 0.002-μfd. mica, 2500-volt.
C_{12}–C_{17}, inc. — 0.01-μfd. paper, 600-volt.
R_1 — 10,000 ohms, ½-watt.
R_2 — 300 ohms, 1-watt.
R_3, R_4 — 25,000 ohms, ½-watt.
R_5–R_9, inc. — 25 ohms, ½-watt.
RFC — 2.5-mh. r.f. choke.
S_1 — Ceramic wafer switch, 6 or more points.
S_2 — Three-gang, three-position ceramic wafer switch (Yaxley 163C).
S_3 — Band-switch with coil mountings (Coto type 700).
S_4 — Two-gang, 6-position (5 used) ceramic wafer switch.
M — 0-200 d.c. milliammeter, bakelite case.

L_1, L_2, L_3 — 1.75 Mc.: 50 turns No. 22 d.s.c. close-wound.
3.5 Mc.: 26 turns No. 18; length 1½ inches.
7 Mc.: 17 turns No. 18; length 1½ inches.
14 Mc.: 8 turns No. 18; length 1½ inches.
28 Mc.: 3 turns No. 18; length 1 inch.
All on 1½-inch diameter forms (Hammarlund SWF-4); turns spaced evenly to fill specified winding length.
L_4 — 1.75 Mc. — 50 turns, 1½-in. diam., 2⅜-in. long, 52 μhys. (Coto Coil CI6160E).
3.5 Mc. — 25 turns, 1½-in. diam., 1⅝-in. long, 16 μhys. (Coto Coil CI680E).
7 Mc. — 16 turns, 1½-in. diam., 1⅞-in. long, 5.7 μhys. (Coto Coil CI640E).
14 Mc. — 8 turns, 1½-in. diam., 1⅝-in. long, 1.5 μhys. (Coto Coil CI620E).
28 Mc. — 4 turns, 1½-in. diam., 1½-in. long, 0.7 μhys. (Coto Coil CI610E).
L_5, L_6 — One turn at bottom of L_1 and L_2. See text.

See Figs. 1236 and 1238 for descriptions of 250- and 750-volt power supplies. Heater voltage and bias are obtained from the 250-volt supply.

is open; the proper connections can be determined by trial.

The above-chassis layout is shown in top-view photograph, Fig. 1234. Along the back, from left to right, are the spare crystal socket, the 6C5 and the 6N7. Directly in front of them are the sockets for the three low-level plate coils, L_1, L_2 and L_3. The sockets are mounted above the chassis on metal pillars. The three tuning condensers, C_1, C_2 and C_3, are mounted in front of their associated coils, and are fastened directly to the chassis. The "hot" leads from the coils come down through grommetted holes in the chassis, underneath the sockets; grounds to the coils are made direct to the chassis, on top.

In the amplifier section, the switch assembly is at the extreme right, with the 807 and tuning condenser, C_4, just to its left. The switch assembly should be mounted far enough back of the panel so that the coils will clear the sides of the relay rack or cabinet; this clearance will depend upon the type of rack used. It is desirable, of course, to keep the leads between C_4 and the switch as short as possible, considering the clearances which must be observed.

The chassis is 8 by 17 by 2 inches, the 2-inch depth being used so that the height of the unit will be within the 8¾-inch relay-rack panel size.

In the bottom view, Fig. 1235, the meter switch with its shunting resistors is at the left, with the 807 plate by-pass condenser, C_{11}, just above it. The stage switch, S_2, is in the center. R.f. leads to this switch should be kept separated as much as the layout will permit. R.f. junction points are insulated by small ceramic pillars. In this view, the right-hand section of the 6N7 is the first doubler. The rotor contact of the section of S_2 nearest the panel goes to the grid of the first doubler, the middle section to the second doubler grid, and the third section to the 807 grid.

The multiple crystal mounting is a 3 by 4½-inch aluminum plate fitted with Amphenol crystal sockets, the assembly being mounted from the chassis by metal pillars. Six crystals may be mounted permanently here; the seventh socket is on top of the chassis for spare crystals or for bringing in excitation from an e.c.o. The crystal switch is in the lower right corner.

The 750-volt lead is brought in through a Millen safety terminal on the rear edge of the chassis. All other power connections come to a Millen five-terminal strip with barriers be-

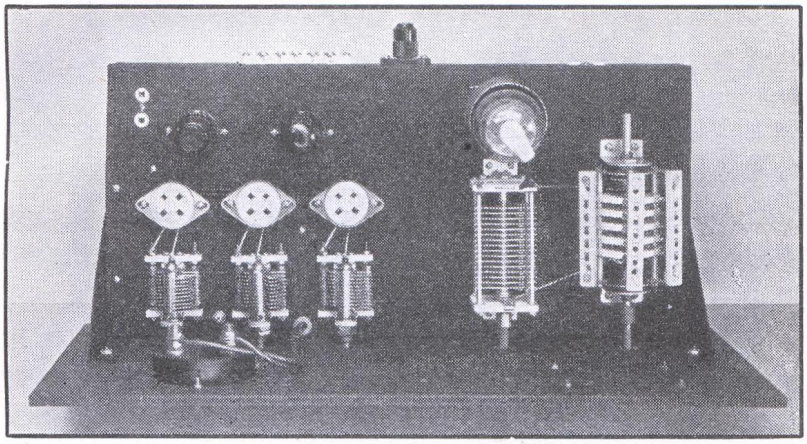

Fig. 1234 — Top view of the band-switching exciter, with coils removed. All tank circuit wiring is above the chassis. Insulated leads connect the first two sockets to complete the neutralizing circuit described in the text.

tween terminals to prevent accidental contact. All grounds are made directly to the chassis.

The low-voltage power supply should deliver 250 volts at approximately 75 ma., and the high-voltage supply 750 volts at 100 ma. A combination supply providing heater voltage and bias, as well as 250 volts for this unit, will be found in Fig. 1236.

Fig. 1238 shows a suitable 750-volt unit. In this case, the 6.3-volt filament transformer is omitted. If desired, both these power units may be assembled on one large chassis.

Tuning — To operate the exciter, coils for consecutively higher-frequency bands are plugged in at L_1, L_2 and L_3; only five are necessary for operation with any crystals from 1.75 to 7 Mc. and for output from 1.75 to 28 Mc. For example, with 3.5-Mc. crystals, the 3.5-, 7- and 14-Mc. coils would be plugged in at L_1, L_2 and L_3 respectively. For 1.75-Mc. crystals, the 1.75-, 3.5- and 7-Mc. coils would be used, and so on. The plate coils for the 807 circuit should cover the same three bands as the low-level coils.

Preliminary tuning should be done with the plate voltage for the 807 disconnected. Set S_2 so that all tubes are in use. Switch the milliammeter to the oscillator circuit and close the key. Rotate C_1 for the dip in plate current which indicates oscillation. The non-oscillating plate current should be between 20 and 25 ma., dropping to 15 or 20 when oscillating. Switch the meter to the doubler plate and adjust C_2 to minimum plate current, or resonance. The off-resonance plate current should be about 30 ma. or more and the reading should be between 10 and 15 at resonance. Check the second doubler plate current and tuning similarly; the off-resonance plate current should again be around 30 ma., dropping to 15 or 20 at resonance. At this point the 807 screen current should be measured; with too much excitation it will be considerably higher than the rated value (about 12 ma.) and the excitation should not be kept on for more than a second or two.

Next, the plate voltage may be applied to the 807. The amplifier should not be operated without load for more than a few moments at a time, because under these conditions the screen dissipation is excessive. Use a 70-ohm dummy antenna or 60 watt lamp connected to the output link. The three bands may be checked in order by appropriate switching of S_2 and S_3. With the 807 fully loaded, check the screen current to make sure it does not exceed 10 or 12 ma. If it is too high, reduce the excitation by detuning the crystal oscillator until it reaches the proper value. The 807 grid current may be measured with a lower-range milliammeter connected in series with the bias source,

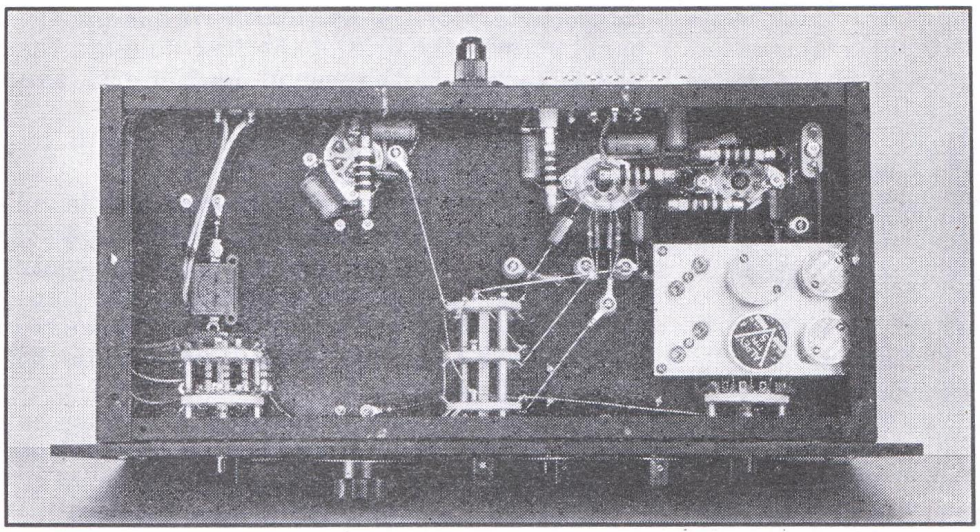

Fig. 1235 — Bottom view of the band-switching exciter, showing the multiple crystal mounting and switching circuits.

if desired. Maximum output will be secured with a grid current of about 3 or 4 milliamperes, a value which also will give about rated screen current. The screen current, in fact, is a very good indicator of excitation. The 807 should show no tendency to oscillate by itself when the key is open.

The current to each section of the 6N7 should be 20 ma. with the key open (no excitation). If the two currents are not the same or show changes with tuning of C_2 and C_1 with key open, the first doubler may be acting as a t.p.t.g. oscillator as previously mentioned, and the neutralizing circuit should be checked. Do not use more than 250 volts for the low-voltage supply, as higher values will cause excessive 807 screen dissipation. Care also should be taken to avoid excessive excitation for the same reason. In normal operation, with C_1 detuned to reduce excitation to the proper value, the doubler plate currents will show little change between resonance and off-resonance tuning.

With maximum input to the 807 plate (75 watts) the output is approximately 50 watts on all bands except 28 Mc., where greater circuit losses decrease it to about 40 watts. The excitation is more than ample on all bands.

The oscillator circuit may be arranged for v.f.o. input as shown in Fig. 1259.

• COMBINATION LOW-VOLTAGE PLATE OR SCREEN SUPPLY AND FIXED-BIAS PACK

Fig. 1236 illustrates a combination pack which will deliver 250 or 300 volts, 75 ma., for supplying plate voltage for receiving-tube exciter stages as well as screen and fixed-bias for a beam-tube driver stage.

The circuit diagram is shown in Fig. 1237-A. In addition to the usual full-wave rectifier circuit, a half-wave rectifier is also connected across one half of the transformer in reverse direction to provide a biasing voltage which is held constant at 75 volts by the VR75 regulator tube. The regulator tube will pass a grid current of 25 ma. without overload. The 1V rectifier is indirectly heated so that it may be operated from the 6.3-volt winding supplying the r.f. tubes.

The output voltage at about 75 ma. may be increased from 250 to 300 by the addition of the input condenser, C_4, whose connections are shown in dotted lines.

If the bias section is not needed, the plate or screen voltage may be obtained with the simplified circuit shown in Fig. 1237-B.

• COMPLETE 75-WATT MULTIBAND TRANSMITTER

If it is desired to use the exciter unit shown in Fig. 1232 as a complete transmitter feeding the antenna, it may be combined with the power-supply units of Figs. 1236 and 1238 and the antenna tuner of Fig. 1216 (large condensers). The unit of Fig. 1236 will supply plate voltage for the oscillator and doubler stages as well as screen and bias voltages for the 807. Filament supply is also obtainable from this unit. Plate voltage for the 807 is furnished by the unit of Fig. 1238. The combined height of all units (assuming the unit of Fig. 1236 to be mounted on a 7-inch panel) will be 29¾ inches. The filament transformer shown in the diagram of Fig. 1239 will not be required.

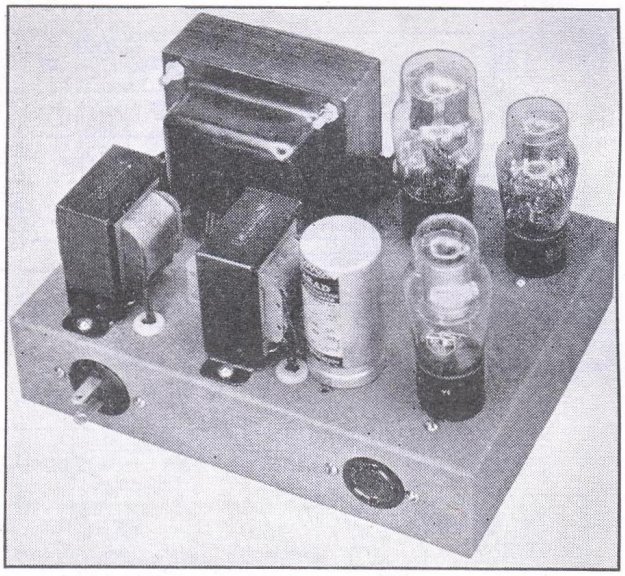

Fig. 1236 — A combination power-supply unit delivering 250 or 300 volts for exciter plate supply and 75 volts fixed bias. The unit is designed especially to work with the bandswitching exciter of Fig. 1232 and the transmitter of Fig. 1221. If desired, the components may be combined with high-voltage plate-supply components on a single chassis. The circuit diagram is shown in Fig. 1237.

• A 450-WATT BAND-SWITCHING PUSH-PULL AMPLIFIER

The photographs of Figs. 1240, 1241, 1243 and 1244 illustrate a 450-watt push-pull bandswitching amplifier capable of handling a power input of 450 watts at 1500 volts for c.w. operation or 375 watts with plate modulation. While the type T55 is shown, any of the tubes of the 1000- or 1500-volt class, such as the 809, T40, HY40, RK35, UH50, 808, 812, RK51 or 35T, may be used in a similar arrangement.

The circuit is shown in Fig. 1042. Bandswitching is accomplished by short-circuiting turns of both plate and grid coils by means of tap switches. Any three adjacent bands may be covered in this manner. By plugging in another pair of coils, a second set of three adjacent bands may be covered. Thus, the 1.75-, 3.5- and 7-Mc. bands may be covered with one pair of coils, the 3.5-, 7- and 14-Mc. bands with another pair and the 7-, 14- and 28-Mc. bands with a third pair.

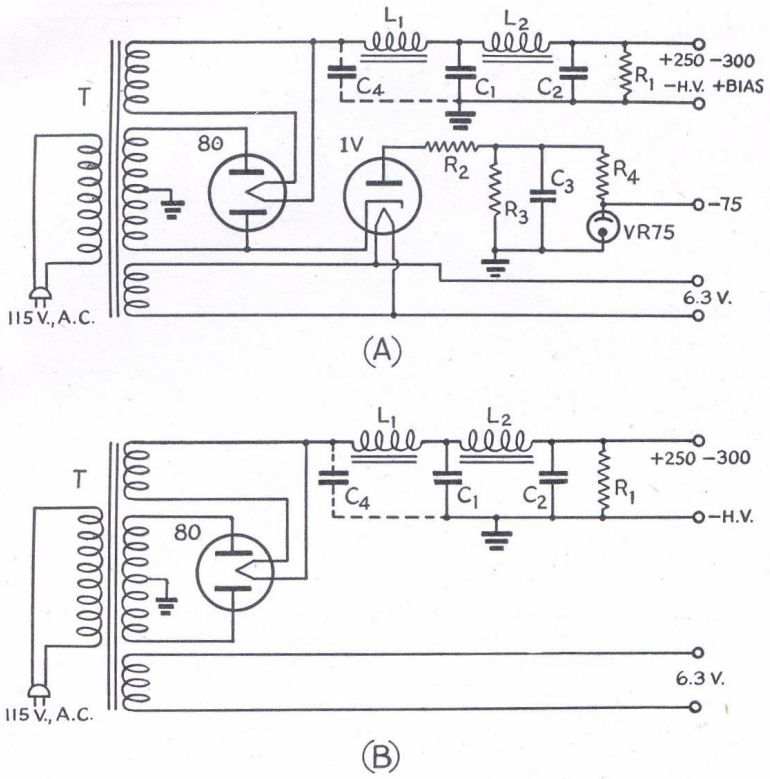

Fig. 1237 — Circuit diagram of the combination plate, screen and bias supply pictured in Fig. 1236.
C_1, C_2 — Sections of 8-μfd. dual electrolytic, 450 volts working.
C_3 — 8 μfd., 450 volts working, paper.
C_4 — Same as C_3, used only for 300-volt output.
L_1, L_2 — 6 hy., 80-ma., 138 ohms (Thordarson T-57C51).
R_1 — 20,000 ohms, 10-watt.
R_2 — 20,000 ohms, 2-watt.
R_3 — 25,000 ohms, 2-watt.
R_4 — 15,000 ohms, 2-watt.
T — 300 volts, r.m.s., each side of center, 90 ma., 5 volts, 3 amp., 6.3 volts, 3.5 amp. (Thordarson T-13R13).
If desired, the bias branch may be omitted as shown at B. Values are the same as above.

A plug-in fixed air condenser is required for the plate circuit for the 1.75-Mc. band. The plug-in jack base is mounted under the chassis and is wired to the lowest-frequency switch points so that the condenser is automatically connected across the coil when the switch is turned for the 1.75-c. band. When the coil covering this band is not used, the fixed condenser should be removed, or it may be omitted entirely, if operation in this band is not desired. The grid circuit likewise requires padding at 1.75 Mc., but here a 15-μμfd. condenser may be connected permanently across the fourth set of switch contacts which are not used for other bands. C_9-L_3 and C_{10}-L_4 are parasitic traps to eliminate ultra-high-frequency parasitic oscillation. Fixed-link coupling is used at the input, with variable-link coupling in the output.

Construction — The plate tank-circuit components are grouped at the left-hand end of the chassis. The tank-coil jack bar is mounted on a pair of metal supports 2⅞ inches high so that the variable-link control shaft will clear the Ohmite switches by a half-inch or so. The switch units are mounted on 1-inch cone insulators after their mounting brackets have been revamped to bring the shafts 1½ inches above the chassis. The two switch units are spaced on the chassis so as to be central with the connections on the coil jack bar. The shafts are coupled together with a section of ⅜-inch bakelite rod with brass reducing couplings at each end. Each end of the bakelite section should be flattened slightly so that the coupling set screw will not slip. The two feed-through insulators at the edge of the chassis are mounted near the switch and are for the connections between the switch units and the padder-condenser jack base under the chassis. The plate tank condenser is mounted on 1½-inch cone insulators just to the right of the tank coil. The plate r.f. choke and a feed-through insulator for the high-voltage lead are placed beneath the coil mounting. The by-pass C_5 is fastened by heavy wire leads between the grounded front coil bracket and the tank-condenser rotor connection.

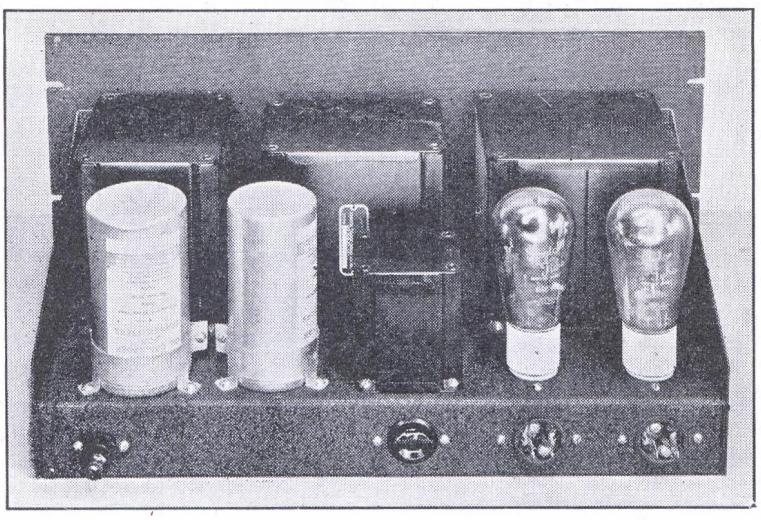

Fig. 1238 — This supply delivers either 620 or 780 volts at a full-load current of 260 ma. with 0.4% ripple and regulation of 22%. Voltage is changed by a tap on the plate-transformer primary winding. All exposed component terminals are underneath the chassis. The panel is 8¾ inches, by 19 inches, by 3 inches. A 6.3-volt transformer is included for heating filaments of r.f. tubes. It is mounted underneath the chassis and its output terminals are brought out to a 115-volt receptacle in the rear. The circuit diagram is shown in Fig. 1239

On the right side of the chassis the grid tank-circuit components are grouped. The tank condenser is mounted on 1½-in. cone insulators to bring its shaft level with that of the plate tank condenser and placed on the chassis so that the two shafts will come at equal distances from the ends of the chassis. Similarly, the grid switch is mounted on a 1-in. cone insulator after a metal bracket has been fashioned to bring the shaft 2¼ inches above the chassis. It is placed with its shaft and the shaft of the plate switch at equal distances from the chassis edges. The grid tank coil is mounted on a sheet of metal 4 inches by 5 inches, elevated above the switch by four metal pillars 4 inches high. The grid-circuit r.f. choke and a feed-through point for the biasing voltage are between the tank coil and condenser.

The tubes and neutralizing condensers are placed symmetrically between the two tank circuits. A half-inch hole, lined with a rubber grommet, is drilled under each tube socket for the filament leads.

Coils — The plate-tank coils listed under the circuit diagram are of a special series designed primarily for use with a multi-section tank condenser. They are provided with four extra plugs which are used, in this case, for the short-circuiting taps. The coil covering 7, 14 and 28 Mc. requires slight alteration, however. Two turns on each side of center are cut free from the supporting strips and left self-supporting, otherwise the coil heat usually developed at 28 Mc. may be sufficient to ruin the base strip.

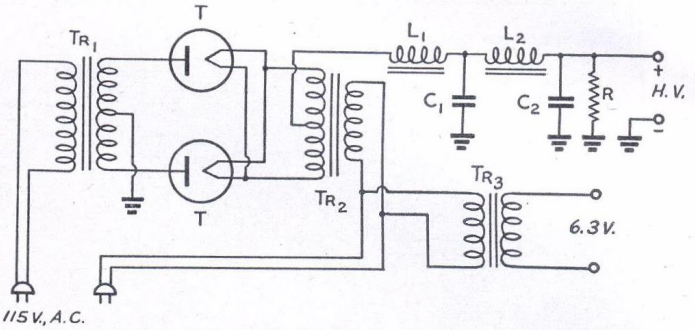

Fig. 1239 — Circuit diagram of the power-supply unit shown in Fig. 1238.
C_1 — 2 μfd., 1000 volts (Sprague 0T21).
C_2 — 4 μfd., 1000 volts (Sprague 0T41).
L_1 — Input choke, 6–19 hy., 300 ma., 125 ohms (Kenyon T-510).
L_2 — Smoothing choke, 11 hy., 300 ma., 125 ohms (Kenyon T-166).
R — 20,000 ohms, 50 watts.
T — Type 866 jr. rectifier.
Tr_1 — 925 or 740 volts, r.n.s. each side of center, 300 ma. d.c. (Kenyon T-656).
Tr_2 — 2.5 volts, 10 amp., 2000-volt insulation (Kenyon T-352).
Tr_3 — 6.3-volts, 3 amp. for use with the exciter of Fig. 1265.

At the same time, these two turns on each side should be reduced in diameter to 1⅞ inch. This may be done quite readily by unsoldering the central ends, twisting the turns to the smaller diameter and cutting off the excess wire. While the lower-frequency taps may be soldered, it is advisable to use clamps on the wire for the 28-Mc. taps. Johnson coil clips are just right for the purpose.

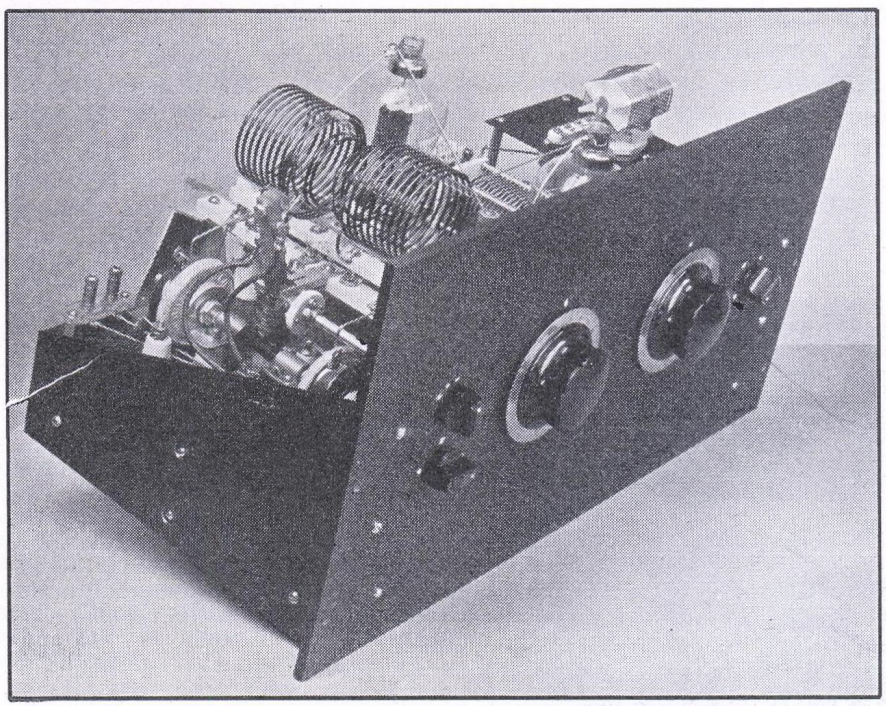

Fig. 1240 — The panel of the band-switching amplifier is 10½ inches by 19 inches. The dials control the plate- and grid-tank condensers. The uppermost of the two small knobs to the left is for adjusting the variable link-output coupling, while the lower one is for the plate band switch. The grid band switch knob is to the right.

Since grid coils are unobtainable with sufficient pins in the mounting, the taps for the grid coils are brought out to a 5-prong Millen coil-mounting bar (Type 40205). A plug-in socket for the bar is submounted in back of the coil socket.

Wiring — All of the wiring, excepting the power wiring underneath the chassis is done with No. 14 tinned bus wire. In all possible cases, connections are made with short straight sections of wire running directly from point to point. Of importance are the leads to the tube grids and plates. The leads to the tank condensers and those to the neutralizing condensers are kept entirely separate; at no point are these leads common. This practice helps in the prevention of parasitic oscillations. The grid by-pass condenser is mounted close to the

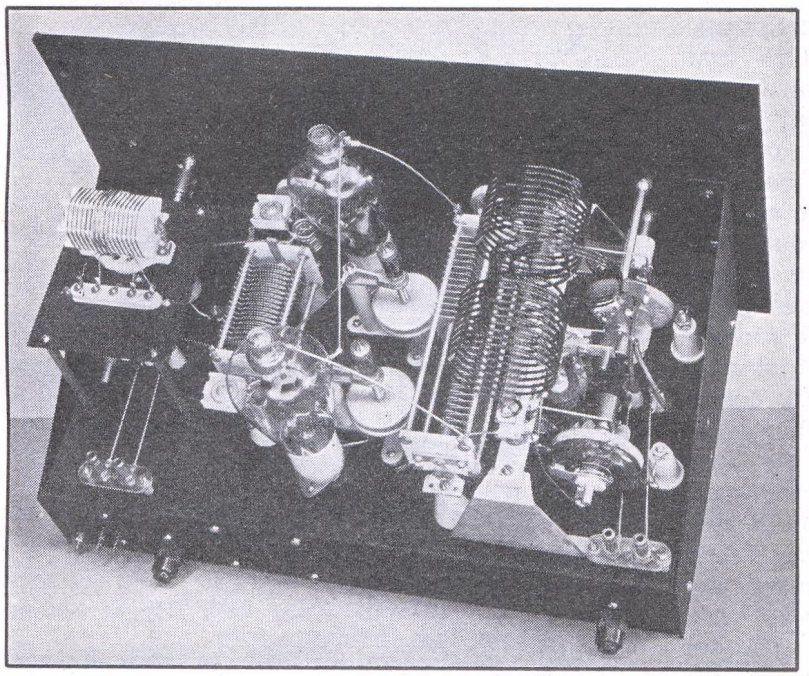

Fig. 1241 — Rear view of the band-switching amplifier. Link input and output terminals are at the left and right-hand ends of the chassis respectively. The parasitic traps are self-supporting between the grid-tank-condenser terminals and the grid terminals of the tubes. The controls of both tank condensers must be well-insulated from the shafts.

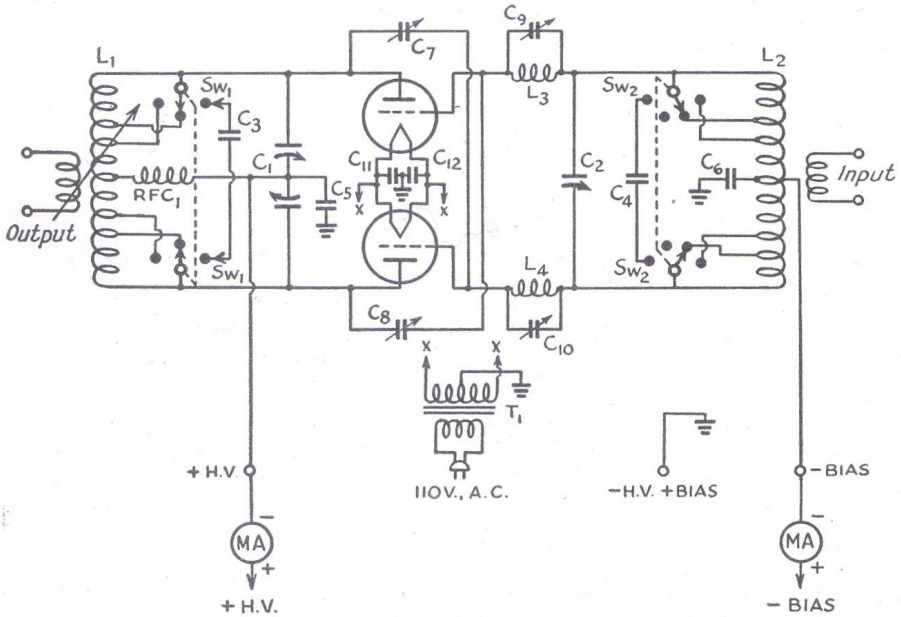

Fig. 1242 — Circuit diagram of the 450-watt band switching amplifier.

C_1 — 100 $\mu\mu$fd. per section, 0.07-in. plate spacing (Hammarlund HFBD-100-E).

C_2 — 150 $\mu\mu$fd., plate spacing 0.05-in. (Hammarlund HFB-150-C).

C_3 — 50-$\mu\mu$fd. fixed air padder for 1.75 Mc., spacing 0.17 in. or greater (see text) (Cardwell JCO-50-OS).

C_4 — 15-$\mu\mu$fd. padder for 1.75 Mc., 0.05-in. spacing (see text) (Hammarlund HFA-15-E).

C_5 — 0.001-μfd. mica, 7500-volt (Aerovox 1623).

C_6 — 0.01-μfd. paper.

C_7, C_8 — Neutralizing condenser (National NC800).

C_9, C_{10} — Isolantite mica adjustable trimmer, 20–100 $\mu\mu$fd. (Mallory CTX954).

C_{11}, C_{12} — 0.01-μfd. paper.

RFC_1 — 1-mh. r.f. choke, 600-ma. (National R154).

SW_1 — Ganged sections of Ohmite ham-band switch (3-position).

SW_2 — Ganged sections of Mallory ham-band switch (4-position) (type 162C).

T_1 — 7.5-volt, 6-amp. filament transformer (Thordarson T19F94).

L_1 — For 1.75-, 3.5- and 7-Mc. bands — 60 turns No. 16, 5⅜-in. long, 2½-in. diam., tapped at the 7th and 16th turn each side of center (B & W TVH-160) (90 μhy., tapped each side of center at 7/30 and 8/15 of total number of turns in each half).

For 3.5-, 7- and 14-Mc. bands — 38 turns No. 14 5¼-in. long, 2½-in. diam., tapped at the 4th and 9th turn each side of center (B & W TVH-80) (35 μhy., tapped each side of center at 2/19 and 9/38 of total number of turns in each half).

For 7-, 14- and 28-Mc. bands — 24 turns No. 12 5¼-in. long, 2½-in. diam., tapped at 2nd and 5th turns each side of center (see text for alterations) (B & W TVH-40) 13 μhy., tapped each side of center at approx. 1/6 and 5½ of total number of turns in each half. (See text on adjustment.)

L_2 — For 1.75-, 3.5- and 7-Mc. bands — 52 turns, 2-in. long, 1½-in. diam., tapped at 9th and 17th turns each side of center. (Coto CS160C) (56 μhy. tapped each side of center at 9/26 and 17/26 of total number of turns in each half).

For 3.5-, 7- and 14-Mc. bands — 26 turns, 1½-in. long, 1½-in. diam., tapped at 5th and 9th turns from each side of center. (Coto CS80C) (17 μhy., tapped each side of center at 5/13 and 9/13 of total number of turns in each half).

For 7-, 14- and 28-Mc. bands — 16 turns 1⅞-in. long, 1½-in. diam., tapped at 1st and 3rd turns each side of center. (Coto CS40C) (5 μhy., tapped each side of center at ⅛ and ⅜ of total number of turns in each half).

L_3, L_4 — 8 turns No. 12, ½-in. inside diam., 1⅛-in. long.

grid-coil socket. Millen safety terminals are used for the bias and high voltage.

Power Supply — The 7.5-volt filament transformer is mounted underneath the chassis, so that only plate and biasing voltages need be obtained externally. A suitable 1500-volt plate-power unit is shown in Fig. 1245 with the circuit diagram in Fig. 1246. The circuit diagram of a simple bias pack for the amplifier is shown in Fig. 1247. For this use, the VR75 regulator tube and the resistance, R_1, are omitted. R_2 and R_3 should be approximately 4000 ohms each for T55s. The two power units may be combined on a single chassis, if so desired.

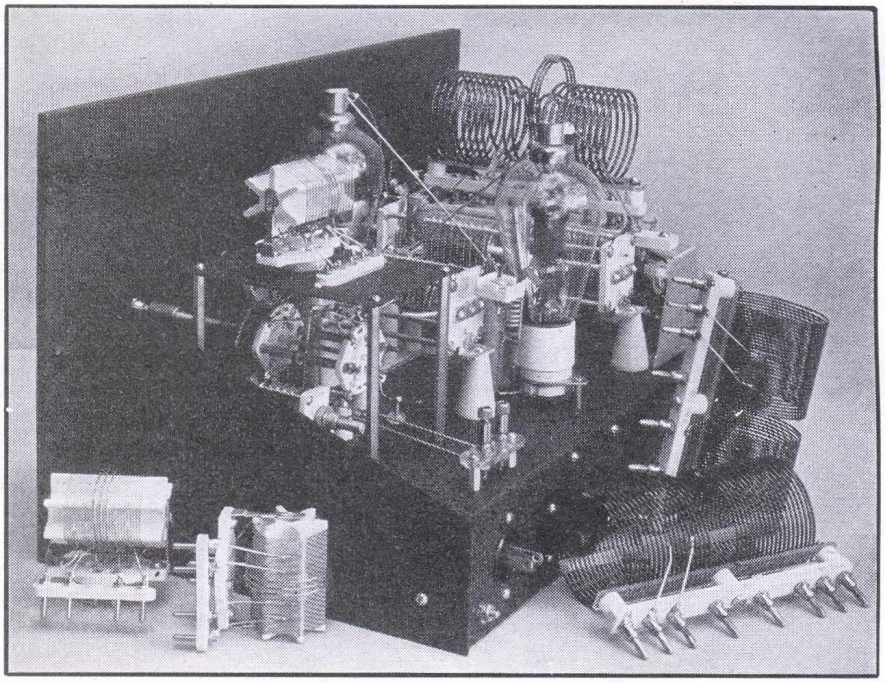

Fig. 1243 — Grid-circuit end of band-switching push-pull amplifier showing switching arrangement and the 1.75-Mc. padder.

Fig. 1242 shows how milliammeters should be connected for reading grid and plate currents. These are not included in the unit, but may be mounted in a separate meter panel constructed as shown in Fig. 1294. The grid-current meter should have a scale of 100 ma., while the plate-current meter should have a scale of 500 ma.

Tuning — Any one of the r.f. units shown in Figs. 1232, 1265 or 1275 will furnish sufficient excitation for this amplifier, the bandswitching unit of Fig. 1232 being an excellent companion unit.

Before excitation is applied, the two condensers C_9 and C_{10} should be set at maximum capacity. With excitation applied and plate voltage off, grid current to the amplifier should run between 60 and 90 ma. Make certain that the coil switches are set at the appropriate points. The amplifier may be neutralized, using the grid meter as an indicator.

The amplifier should now be tested for parasitic oscillation. The bias should be reduced to a point which will allow a plate current of 100 ma. or so to flow without excitation. This may be done by moving the biasing tap of the amplifier down toward the positive terminal of the bias supply. It is advisable to lower plate voltage for this test by inserting a resistance of about 2500 ohms in series with the plate voltage or inserting a 200-watt lamp in series with the primary winding of the plate transformer. The grid tank condensers should be set at various points while the plate tank condenser is swung through its range. The plate current should remain perfectly stationary. If a point is found where a sudden change in plate current takes place, C_9 and C_{10} should be adjusted, bit by bit, until the variation in plate current disappears. C_9 and C_{10} should be

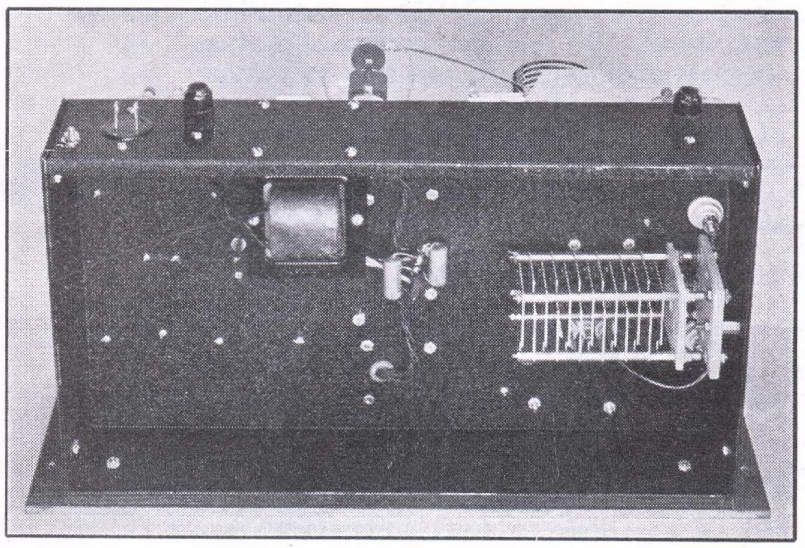

Fig. 1244 — The chassis for the band-switching amplifier is 10 inches by 17 inches by 3 inches. The plug-in air padding condenser for 1.75 Mc. is spaced with equal distance between top and bottom of the chassis. Filament by-pass condensers are soldered to the terminals of the fibre lug strip to which the filament transformer terminals are anchored.

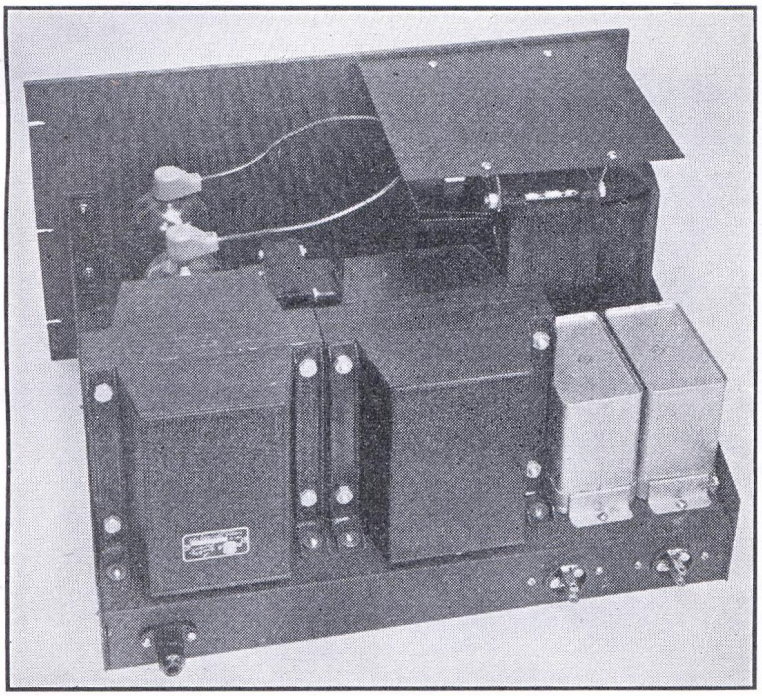

Fig. 1245 — This unit delivers 1500 or 1250 volts at full-load current of 425 ma., with 0.25% ripple and regulation of 10%. Voltages are selected by taps on the secondary. The secondary terminal board is covered with a section of steel panel supported by brackets fastened underneath the core clamps and insulating caps are provided for the tube plate terminals. A special safety terminal (Millen) is used for the positive high-voltage connection. The panel is 10½ in. by 19 in. and the chassis 13 in. by 17 in. by 2 in. The circuit diagram is shown in Fig. 1246.

set as close to maximum capacity as possible and yet eliminate the parasitic.

Normal biasing voltage may now be replaced and the amplifier tuned up and loaded. For c.w. operation, the output should exceed 300 watts when operated at the maximum rated input of 1500 volts, 300 ma. With plate modulation, the plate current should be reduced to 250 ma. and the output should exceed 250 watts. The amplifier will operate satisfactorily with grid current of 40 to 70 ma. with the amplifier loaded. The maximum rating of 80 ma. for the two tubes should not be exceeded. Reference should be made to the tube tables of Chapter Twenty for operation of other tubes.

• A SIMPLE COMBINATION BIAS SUPPLY

Fig. 1248 shows the circuit diagram of the simple transformerless bias unit, pictured in Fig. 1247, which will supply cutoff bias voltages up to 100 volts or so. Through grid-leak action, it will also provide the operating bias voltage required when the resistor values are correctly proportioned. The circuit also includes a second branch consisting of R_1 and a VR75 voltage-regulator tube. This branch may not be required in all cases, but will be found convenient in many applications for providing fixed cutoff or protective bias for a low-power stage independent of the main output voltage.

Adjustment — The resistances R_2 and R_3 are combined in a single resistor with two sliding taps. One of these taps alters the total resistance by short-circuiting a portion of the resistance at the negative end, while the other adjusts the cutoff voltage. The method of determining the values of resistance in each section is as follows:

The section R_2 is adjusted to equal the recommended grid-leak resistance for the tube or tubes in use. The value of resistance between the biasing tap and the short-circuiting tap is determined by the following formula:

$$R_3 = \frac{160 - E_{co}}{E_{co}} \times R_2,$$

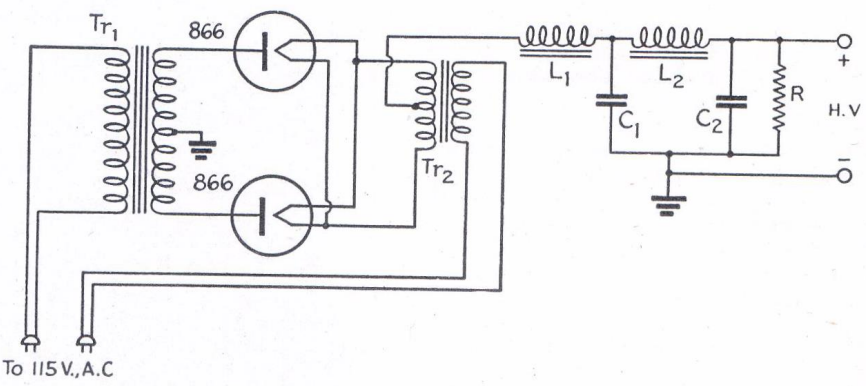

Fig. 1246 — Circuit diagram of the 1500-volt, 425-ma. plate supply for the bandswitching amplifier.

C_1, C_2 — 4 μfds., 2000 v. (C-D type TJU20040).

L_1 — 5–20 hys., 500 ma., 75 ohms (Stancor C1405).

L_2 — 8 hys., 500 ma., 75 ohms (Stancor C1415).

R — 20,000 ohms, 150 watts.

Tr_1 — 1820–1520 v. r.m.s. each side center, 500 ma. d.c. (Stancor type P6157).

Tr_2 — 2.5 v., 10 a., 10,000 v. insulation (Stancor type P3025).

This is also the circuit for the 1250-volt supply shown in Fig. 1225 and the 2500-volt supply shown in Fig. 1285

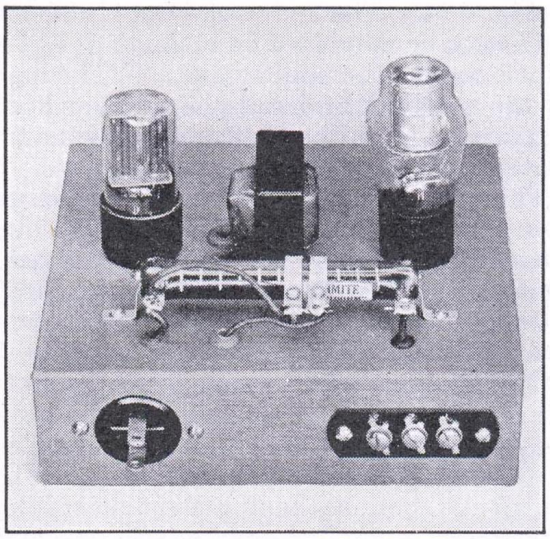

Fig. 1247 — A transformerless combination bias supply suitable for supplying bias for r.f. stages requiring 125 volts or less for cut off. A second branch, controlled by a VR75 regulator tube, provides 75 volts fixed bias for a second stage whose grid current does not exceed 20 ma. The unit above is constructed on a 7-inch by 7-inch chassis, although the components may easily be fitted into spare space on another power-supply chassis. The regulated branch may be omitted when not required. The circuit diagram is shown in Fig. 1248.

where E_{co} is the voltage required for plate-current cutoff. This may be determined to a close approximation for triodes by dividing the plate voltage by the amplification factor of the tube. No extra leak should be used in the stage being supplied by the pack.

The resistance in each section should be first set at the values determined by the formula. The biased amplifier should then be turned on without excitation. If the plate current is not cut off, or cut to a safe value, the biasing tap should be moved upward in the negative direction. With the amplifier in operation with rated grid current, the biasing voltage should be measured. If it is higher than that recommended in the tube operating tables, *both* the biasing tap and the short-circuiting tap on the upper section should be moved bit by bit toward the positive end until the correct operating bias is obtained. A final adjustment may now be necessary to again arrive at a cutoff voltage without excitation.

Fig. 1247 shows the components assembled on a small chassis. They may, however, be combined with plate-supply components on a single chassis, since little additional space is required.

It will be noticed that only one wire is shown connected to the power plug in the circuit diagram. The return circuit is made through an actual ground connection to the chassis to prevent possible short-circuit of the 115-volt line should the power plug happen to be incorrectly polarized.

• WIDE-RANGE ANTENNA COUPLER

The photograph of Fig. 1249 shows the construction of a wide-range antenna coupler. A separate coil is used for each band and the desired connections for series or parallel tuning with high or low *C* or for low-impedance output with high or low *C* are automatically made when the coil is plugged in. Coil connections to the pins for various arrangements are shown in Fig. 1250.

The condenser specified with a set of regular coils should cover practically all coupling conditions likely to be encountered. Because the switching of connections requires the use of the central pin, a slight alteration in the B & W unit is required. The link mounting is removed from the jack bar and an extra jack is placed in the central hole. The link assembly is then mounted on a 2-inch cone insulator to one side of the jack bar. On each coil, the central nut is removed and a Johnson tapped plug, similar to those furnished with the coils, is substituted. An extension shaft is fitted on the link shaft and a control is brought out to the panel.

The tank condenser is mounted with angle brackets on four 1-inch cone insulators and an insulated coupling provided for the shaft.

If desired, the coils may be wound with fixed links on transmitting ceramic forms. The links will have to be provided with flexible leads to be plugged into a pair of jack-top insulators mounted near the coil jack strip unless a special mounting is made providing for seven connections.

After the inductance required for each of the various bands has been determined experimentally, the connections to the coils can be made permanent and then it is merely a matter of plugging in the right coil for each band and tuning the condenser for resonance and adjusting the link for loading.

The unit should be satisfactory for trans-

Fig. 1248 — Circuit diagram of the transformerless combination bias supply shown in Fig. 1247.
C_1, C_2 — 16 μfd., 450-volt electrolytic, tubular paper.
L — 60-ma. replacement filter choke.
R_1 — 7500 ohms, 10 watts.
R_2 plus R_3 — 15,000 ohms, 50-watt with 2 sliders.
See text for adjustment.

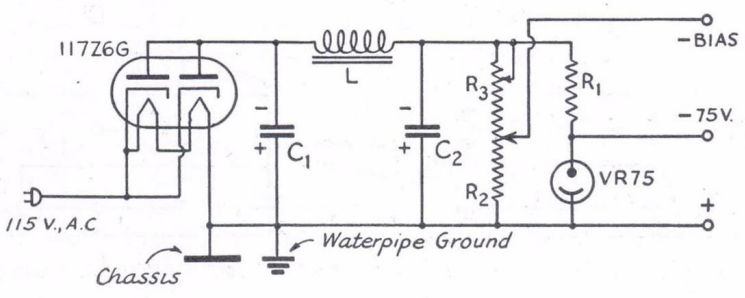

mitters operating at a plate voltage of not more than 1500 with modulation. For higher voltages, a condenser with larger spacing should be used.

• COMPLETE 450-WATT BANDSWITCHING TRANSMITTER

The various units shown in Figs. 1232 to 1250 have been described in sequence because they may be placed in a relay rack to form a complete high-power bandswitching transmitter.

Heater, low-voltage-plate and 807 screen-voltage supply for the exciter may be obtained from the simplified 250-volt pack of Fig. 1237-B, while plate voltage for the 807 is furnished by the unit shown in Fig. 1238. Bias voltages for both amplifier and exciter are obtainable from the unit of Fig. 1247, while amplifier plate voltage is furnished by the unit of Fig. 1245. The units of Figs. 1237-B and 1247 may be combined in a single unit with a 7-inch panel. The addition of a 5¼-inch panel for the amplifier grid and plate meters and the antenna tuner of Fig. 1249 completes the transmitter.

The most logical arrangement for the units, from top to bottom, is as follows: (1) antenna tuner, (2) final amplifier, (3) meter panel, (4) exciter, (5) low-voltage and bias supplies, (6) 750-volt supply, (7) high-voltage supply. The combined height of these units is 59½ inches.

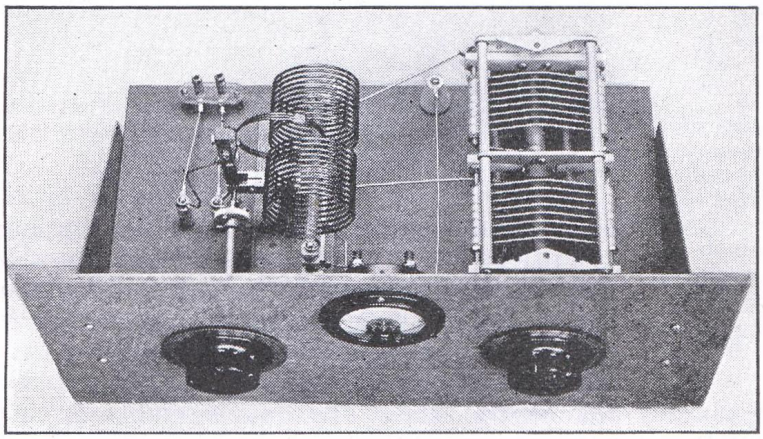

Fig. 1249 — Wide-range antenna coupler. The unit is mounted on a chassis 10 in. by 17 in. by 2 in. with a panel 8¾ in. by 19 in. The condenser is a split-stator unit having a capacity of 200 $\mu\mu$fds. per section. 0.07-in. plate spacing (Johnson 200ED30). The coils are the B & W TVL series. The r.f. ammeter has a 4-amp. scale.

Information on a control circuit for such a transmitter will be found in Fig. 1296.

• A VARIABLE-FREQUENCY EXCITER

The photographs of Figs. 1251, 1253 and 1255 illustrate the construction of a variable-frequency unit which is designed to take the

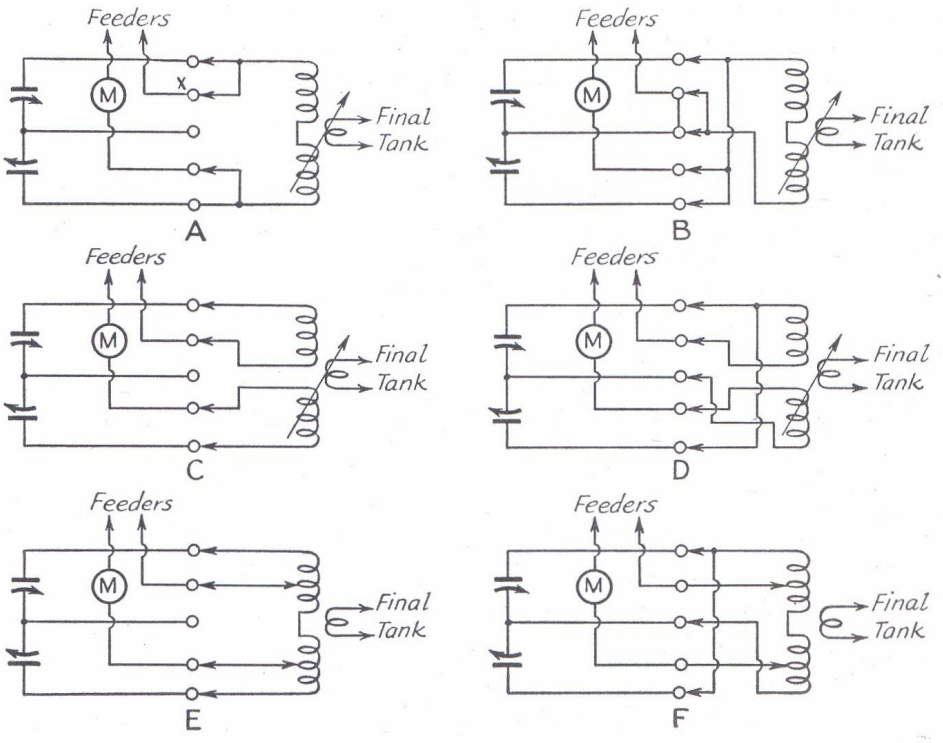

Fig. 1250 — Circuit diagram of the wide-range antenna coupler for use with bandswitching amplifier. A — Parallel tuning, low *C*. B — Parallel tuning, high *C*. C — Series tuning, low *C*. D — Series tuning, high *C*. E — Parallel tank, low-impedance output, low *C*. F — Parallel tank, low-impedance output, high *C*. For single-wire matched-impedance feeders, the arrangements of E or F would be used with a single tap instead of the double tap shown. For simple voltage-fed antennas, the arrangement of A would be used with the end of the antenna connected at "X."

place of the crystal as a frequency control in most of the common forms of crystal-oscillator circuits. The power output of the unit is approximately one and one-half watts, which is sufficient for this purpose, or for driving an 807. By means of plug-in coils, output at any frequency in the 1.75-, 3.5-, or 7-Mc. bands may be obtained.

Referring to the circuit diagram of Fig. 1252, a 6F6 is used in the e.c.o. circuit. Since the buffer stage provides adequate isolation, the use of a well-screened tube in the oscillator circuit is not a requirement. The cathode is connected to a feedback winding, L_2, rather than to a direct tap on L_1, to make adjustment of feedback less difficult. A high-C tank circuit is obtained by the fixed padders, C_1 and C_2, which are of the zero-drift type. Bandspread tuning is obtained by the split-stator condenser, C_3.

When coils *1* and *1A* (see coil charts) are plugged in, the two sections of C_3 are connected in parallel and the output-frequency spread is 1750 to 2050 kc. to cover the 1.75-Mc. band or, through a doubler, the 3.5-Mc. band. Similarly, with coils *2* and *2A*, the sections are in parallel and the output-frequency spread is from 3500 to 4000 kc. to cover the 3.5-Mc. band.

When coils *1B* and *1AB* are plugged in, the sections of C_3 are in series and the output-frequency range is 1750 to 1825 kc. for obtaining, through doublers, the frequency ranges of 7000 to 7300 and 14,000 to 14,400 kc. Similarly, when coils *2B* and *2AB* are plugged in, the output-frequency range is 3500 to 3650 kc. for obtaining, through doublers, the same frequency ranges of 7000 to 7300 and 14,000 to 14,400 kc. The sections of C_3 are also in series when coils *3* and *3A* are plugged in and the output-frequency range is 7000 to 7300 kc. for covering the 7-Mc band and, through a doubler, the 14-Mc. band.

When coils *3B* and *3AB* are plugged in, only one section of C_3 is in use and the output-frequency range of 7000 to 7500 kc. is useful in obtaining, through doublers, the range of 28,000 to 30,000 kc.

Proper connections to C_3 are made automatically when each oscillator coil is plugged in, as shown in Fig. 1254.

Choke coupling is used between the oscillator and the 6L6 isolating stage. This stage is operated very close to Class-A conditions and is tuned to the second harmonic of the oscillator frequency. Thus, the oscillator operates at half the desired output frequency. The type 6L6 is used to take care of the unusually-high dissipation necessary in this type of operation. The tuning of the output circuit is ganged with that of the oscillator. Tracking taps on L_3 are required only for spreading the higher-frequency bands. Adjustable mica padders, C_6, are mounted in each coil form.

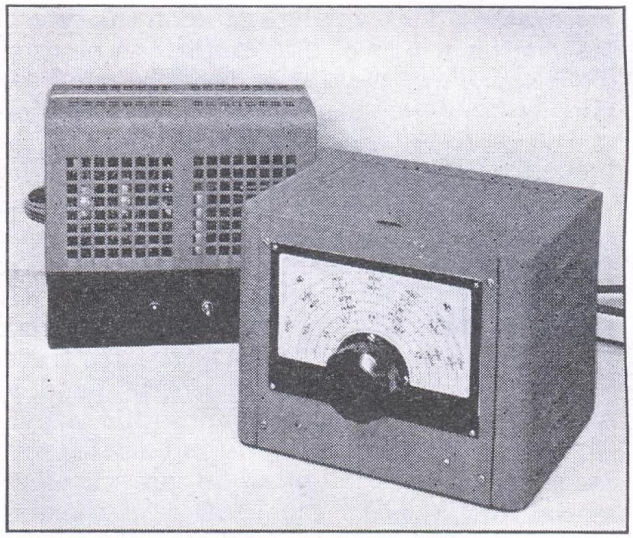

Fig. 1251 — The variable-frequency exciter is enclosed in an 8-by-8-by-10-inch Parmetal cabinet. The dial is the National type ACN, suitable for calibrating. The voltage-regulated power supply is an inexpensive receiver supply mounted in a Parmetal amplifier-foundation case with a 5-inch, by 3-inch, by 10-inch chassis.

To solve some of the difficulties often encountered in key filtering an oscillator of this type, the oscillator stage is keyed in the screen circuit. This means that both sides of the key are at a potential of 150 volts above ground potential. It is, therefore, preferable to use a relay to isolate the key contacts from this voltage. Otherwise, due caution should be exercised. If preferred, cathode keying may be used as shown in Fig. 1254F, but it is more difficult to obtain soft keying without introducing chirp with this system. With cathode keying, the screen connection will go directly to pin No. 2 on the power plug, eliminating the jack in the screen circuit.

A link winding, L_4 is provided for coupling the output to the input of the stage to be driven.

Power supply — The unit operates from the power supply shown in Fig. 1257 and whose circuit is shown in Fig. 1258. The two are connected with a length of five-conductor shielded battery cable fitted with a five-prong female connector at the unit end and a similar male plug at the power-supply end. Almost any of the usual type of well-filtered receiver power supplies delivering 325 to 350 volts with a 50-ma.-or-better rating may be made to serve the purpose equally well, merely by the addition of the VR150 regulator tubes and the dropping resistor, R_2.

Coils — Coil dimensions for several oscillator ranges are given in the coil table under Fig. 1254. Only those which suit the conditions under which the unit is to be operated need be

constructed. This will depend upon the type of transmitter with which the unit is to be used. To begin with, only coils need be provided giving output in bands for which crystals, formerly used, are ground. For instance, if the oscillator stage to be driven is designed for 1.75-Mc. crystals only, coils need be wound for this band only. If the *transmitter* operates only in the 1.75-Mc. band, or, by doubling, in the 1.75- and 3.5-Mc. bands exclusively, only the 1.75-Mc. coils for the first bandspread range will be required. If, however, the transmitter is designed to cover the 7-Mc. band, as well as the lower-frequency bands, from a 1.75-Mc. crystal, coils for the second bandspread range will also be necessary to get full bandspread at 7 Mc. An examination of the coil-selection table will show what coils are required, depending upon the crystal frequency normally used to secure output in the desired band. If full bandspread at 7-Mc. and higher frequencies is not deemed necessary, the wide bandspread coils for these frequencies need not be constructed.

The oscillator coils are wound on Millen one-inch diameter coil forms which are mounted in National PB-10 five-prong shielded plug-in bases. The feedback coils, L_2, are wound over the bottom turns of L_1, and in the same direction. Connections to the base pins are given in Fig. 1254*A*, *B* and *C*.

The buffer coils are wound on Hammarlund 1½-in.-diameter 5-prong forms. The padding condensers, C_6, are mounted inside the coil forms, fastened in place with a 4-36 machine screw. Buffer coils for the higher-frequency ranges must be tapped as directed. One satisfactory way of making this tap is to drill a hole near the bottom of the form for a wire which may be brought outside from the pin to which the tap must be connected. The turn indicated in the table of coil dimensions may be scraped and the tap wire soldered to this turn. Pin connections are shown in Fig. 1254*D* and *E*.

Tuning — Before an attempt is made to tune the circuits, the dropping resistor, R_2, in the power supply should be adjusted. This is done with any pair of coils plugged in and the key closed. Starting with maximum resistance, the slider should be adjusted, bit by bit, until the VR tubes ignite. As much resistance as possible should be left in the circuit consistent with the maintainance of reliable operation of the VR tubes. If the tubes ignite with maximum resistance in circuit, further adjustment will not be required, unless the output voltage of the pack used happens to be unusually high. If this is the case, resistance should be added until the VR tubes will not ignite and then decreased to the point where they first ignite.

The first step in tuning the unit is to check the frequency range of the oscillator. It is probable that differences in wiring inductances and capacities will make it necessary to make slight alterations in the oscillator-coil dimensions given in the table. Unless these differ widely from those of the original model, however, nothing more than an adjustment of the spacing of a few turns at the top of L_1 should be required.

If close calibration is desired, a 100-kc. oscillator checked against WWV, or other frequency-checking means should be provided. The approximate range of the oscillator coil under adjustment may be determined by listening on a receiver. The 1.75-Mc. range of the receiver should be used for checking coil No. 1. The ranges of other coils may be checked with

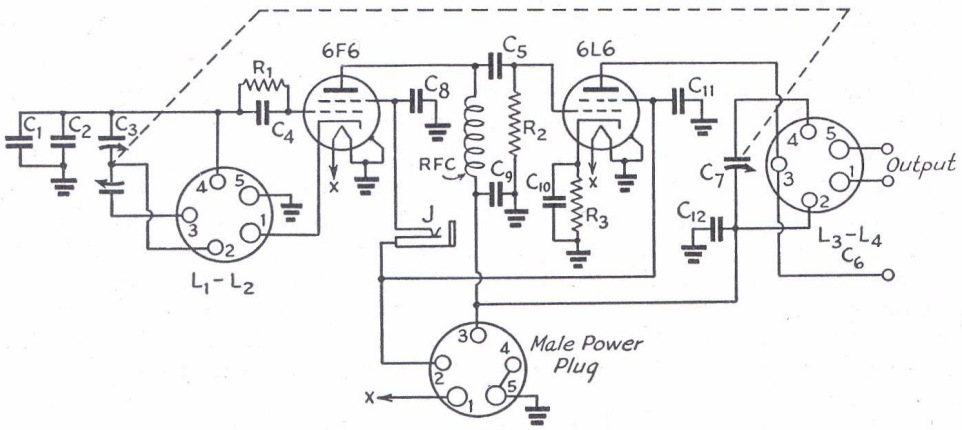

Fig. 1252 — Circuit diagram of the v.f.o. unit.

C_1, C_2 — 300 $\mu\mu$fd. each, zero-temp type (Centralab 816Z).
C_3 — 140 $\mu\mu$fd. per section (Hammarlund MCD-140-S).
C_4 — 100 $\mu\mu$fd. mica.
C_5 — 250 $\mu\mu$fd. mica.
C_6 — 45–260 $\mu\mu$fd. mica trimmer mounted in coil form (see Fig. 1254) (Hammarlund CTS-160).
C_7 — Approximately 65 $\mu\mu$fd. (Hammarlund MC-100-S with two rear stator plates and two rear rotor plates removed).
C_8, C_9, C_{10}, C_{11}, C_{12} — 0.01 μfd.
J — Single-circuit, closed-circuit jack.
R_1 — 0.1 meg., ½-watt.
R_2 — 0.1 meg., ½-watt.
R_3 — 500 ohms, 1-watt.
L_1, L_2 — Oscillator coils (see Fig. 1254).
L_3, L_4 — Buffer coils (see Fig. 1254).

the receiver tuned to the 3.5-Mc. band, since the harmonics of 2000 to 2050 kc. are the only usable frequencies to fall outside this band.

If the signal from the oscillator is not picked up at any point in the band with any setting of the v.f.o. dial, a wire should be run from the receiver antenna post to a point near the oscillator coil. If it is still impossible to pick up the signal, it is possible that the oscillator may not be functioning. *One* turn should then be added to the feedback winding. More than the single additional turn should not be required. If the winding is larger than that required to maintain reliable operation with the key closed, the circuit may oscillate weakly, even with the key open. This condition is to be avoided, of course, if breakin operation is contemplated.

When the oscillator is functioning satisfactorily, the spacing of the top turn or two of L_1 should be adjusted until the desired band is centered on the dial of the unit. This can be done by spreading a turn or two as mentioned previously. The shield can should be replaced each time a check is made and, when the adjustment is final, the turns should be fastened permanently in place with Duco cement. The v.f.o. unit should be warmed up thoroughly before making a permanent calibration.

The National ACN dial has space for calibrating five ranges. Since the bandspread *ratio* is the same for the two lowest-frequency sets of coils, the oscillator coils for each of these ranges may be adjusted so that the 3.5-Mc. harmonics of the 1.75-Mc. range (*1* and *1A*) will coincide with the fundamental frequencies of the 3.5-Mc. range (*2* and *2A*) and one scale on the dial will serve for both calibrations. It is only necessary to adjust the oscillator coil of the 3.5-Mc. range so that the low-frequency end of the band falls at the same point as the second harmonic of 1750 of the 1.75-Mc. range falls when the 1.75-Mc. coils are plugged in. With similar adjustments, the 7-Mc. and 14-Mc. ranges of the coils *1B* and *1AB*, *2B* and *2AB* and *3* and *3A* may be made to coincide. We, therefore, end up with a single calibration on the dial for each band and only five calibrations are required for the complete set of coils listed in the coil table. A typical dial calibration is shown in Fig. 1256. Intermediate points may be marked in as desired. While the 14-Mc. band does not cover as much of the dial as other bands, nevertheless the bandspread is entirely adequate for accurate setting to zero-beat in this band.

With the oscillator ranges adjusted, the next step is to adjust the tracking of the buffer stage. A 6.3-volt (150-ma.) dial lamp with one or two turns of wire should be coupled to the

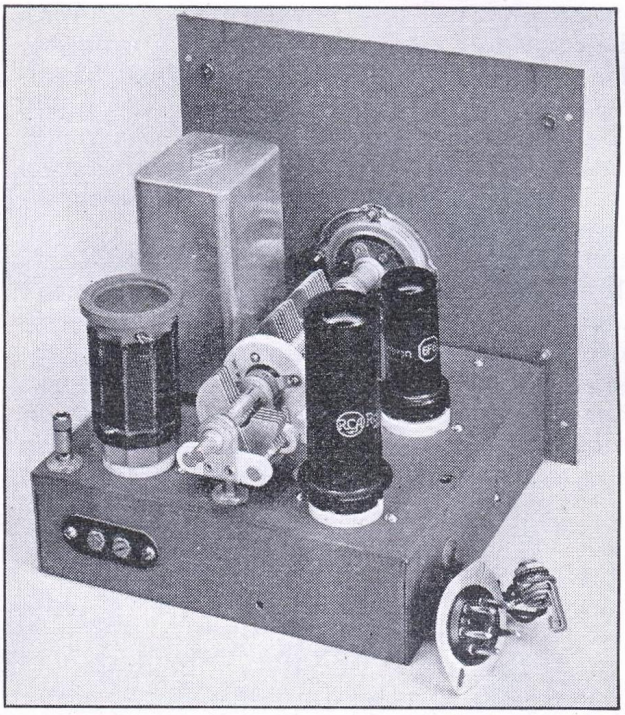

Fig. 1253 — Components for the v.f. exciter are assembled on a 7-by-7-by-2-inch chassis. The dual-section condenser is mounted by removing the shield between sections and fastening to the chassis with a single machine screw. The smaller condenser, C_7, is mounted on National polystyrene button insulators and metal spacers to insulate it from the chassis and bring its shaft in line with that of the dual condenser. It is reverse-mounted, with its tail shaft extension coupled to the tail shaft extension of the dual condenser to reduce the overall mounting space. The stop pin on the shaft must be removed. Leads from the tuning condensers to the sub-mounted coil sockets pass through the chassis via ½-inch holes lined with rubber grommets. The jack for the key, which must be insulated, and the male power connector mount in the side of the cabinet. The chassis is fastened firmly in place in the cabinet with long machine screws running through the chassis and the bottom of the cabinet. The terminals at the rear are for link-output connections, the binding post for capacity coupling.

COIL SELECTION TABLE FOR VARIABLE-FREQUENCY UNIT *

Transmitter Output Freq.	*1.75 Mc.*	*3.5 Mc.*	*7 Mc.*	*14 Mc.*	*28 Mc.*
Crystal Freq. 1.75 Mc.	1 & 1A	1 & 1A	1B & 1AB	1B & 1AB	—
3.5 Mc.	—	2 & 2A	2B & 2AB	2B & 2AB	—
7 Mc.	—	—	3 & 3A	3 & 3A	3B & 3AB

*** Numbers refer to coils in coil-dimension table.**

output tank coil to act as an indicator. With the condenser gang set at minimum capacity, the padder, C_6, in the coil form should be adjusted for maximum brilliance of the lamp. The gang should now be turned to maximum capacity. If the lamp decreases in brilliance, readjust C_6, noting carefully whether an increase or decrease in capacity of C_6 is required to bring the lamp up to its original brilliance. (If the padders suggested in the parts table are used, and if they are mounted in the coil forms with their terminals downward, clockwise rotation of the adjusting screw will decrease capacity, while counter-clockwise rotation will increase capacity. If mounted with the terminals upward, the action will be reversed.)

If an increase in the capacity of C_6 is required with coils having no bandspread tap, C_7 is not tuning fast enough and a turn should be added to L_3. If a decrease in the capacity of C_6 is required, a turn should be removed from L_3. With the tapped coils, the tap should be moved a turn toward the top of L_3, if an increase in C_6 is required, or moved a turn toward the bottom of the coil, if a decrease is required.

After each adjustment of the coil, tracking should again be checked by adjusting C_6 for maximum brilliance with the gang at minimum capacity and then checking at maximum capacity. These adjustments are simple and no trouble should be experienced in speedily ar-

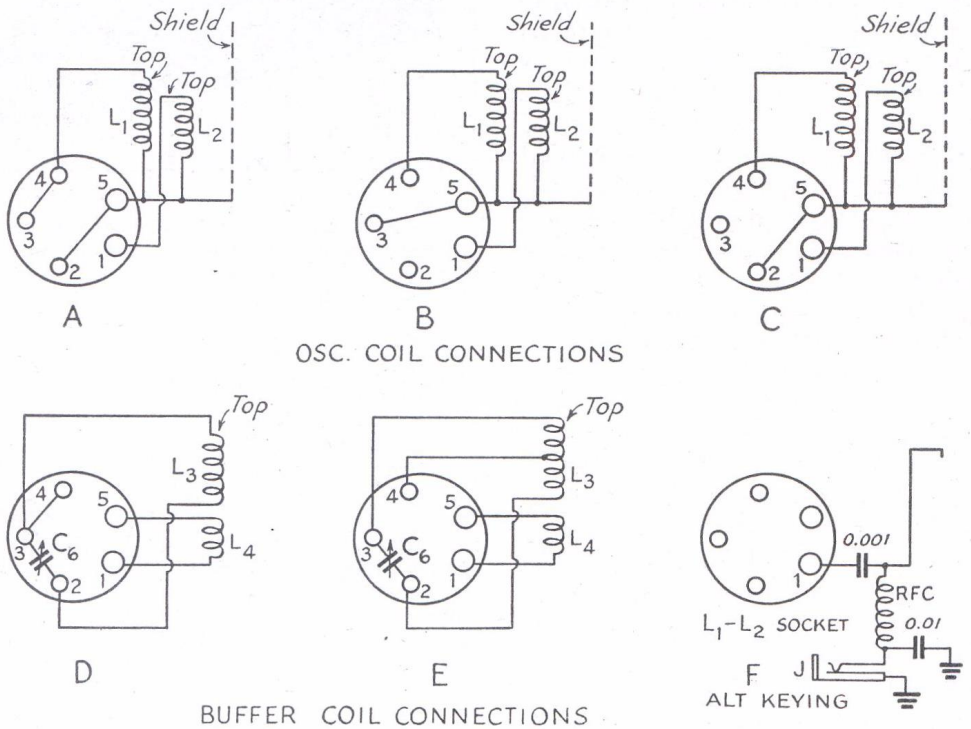

Fig. 1254 — Coil-form connections for the v.f.o. circuit of Fig. 1252. Connections shown at A are for coils 1 and 2. Those shown at B are for coils 3, 1B and 2B. Connections shown at C are for coil No. 3B.

Buffer coils 1A and 2A should be connected as shown at D, while coils 3A, 1AB, 2AB and 3AB should be connected as shown at E.

F shows the circuit for optional cathode keying instead of screen keying as mentioned in text. RFC is an ordinary 2.5-mh. r.f. choke.

Coil dimensions are as follows:

Oscillator (L_1 and L_2)*

Coil No. 1 — (875 to 1025 kc.) — 47 turns No. 26 d.s.c., ⅞-in. long; 6 turns for L_2.

Coil No. 2 — (1750 to 2000 kc.) — 23 turns No. 20 d.s.c., 1¼-in. long; 2 turns for L_2.

Coil No. 3 — (3500 to 3650 kc.) — 14 turns No. 20 d.s.c., 1¼-in. long; 2 turns for L_2.

Coil No. 1B — (875 to 912.5 kc.) — 57 turns No. 26 d.s.c., 1⅛-in. long; 5 turns for L_2.

Coil No. 2B — (1750 to 1825 kc.) — 28 turns No. 20 d.s.c., 1-in. long; 2 turns for L_2.

Coil No. 3B — (3500 to 3750 kc.) — 13½ turns No. 20 d.s.c., 1-in. long; 2 turns for L_2.

* Wound on Millen 1-in. diameter forms, L_2 wound turn for turn over bottom end of L_1 and in same direction.

Buffer Coils (L_3 and L_4)**

Coil No. 1A — (1750 to 2050 kc.) — 41 turns No. 24, 1¾-in. long; approx. 12 turns for L_4.

Coil No. 2A — (3500 to 4000 kc.) — 21 turns No. 18, 1½-in. long; approx. 6 turns for L_4.

Coil No. 3A — (7000 to 7300 kc.) — 14 turns No. 18, 1½-in. long, tapped at 3 turns from bottom; approx. 4 turns for L_4.

Coil No. 1AB — (1750 to 1825 kc.) — 46 turns No. 24, 1¾-in. long, tapped at 19 turns from bottom; approx. 12 turns for L_4.

Coil No. 2AB — (3500 to 3650 kc.) — 24 turns No. 18, 1½-in. long, tapped at 9½ turns from bottom; approx. 6 turns for L_4.

Coil No. 3AB — (7000 to 7500 kc.) — 14 turns No. 18, 1½-in. long, tapped at 5 turns from bottom; approx. 4 turns for L_4.

** Wound on Hammarlund 1½-in. diameter forms, L_4 close-wound below L_3.

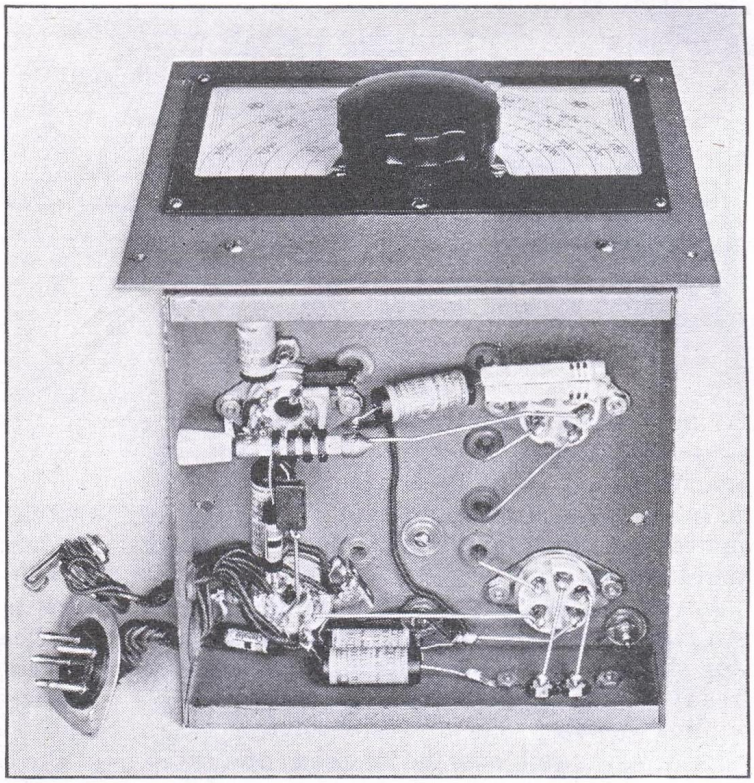

Fig. 1255 — High-frequency connections underneath the chassis of the v.f. exciter unit are made with short, straight sections of heavy wire. The two zero-temp padding condensers are soldered directly to the oscillator-coil socket. All components should be mounted firmly with no opportunity to support mechanical vibrations. Washers about 1/16-inch thick should be placed between the panel and the chassis to provide space for the lower lip of the cabinet opening.

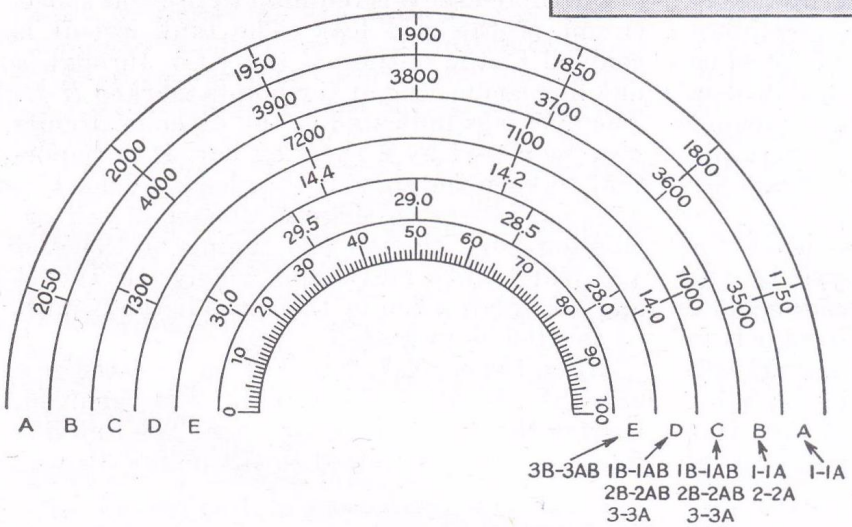

Fig. 1256 — Typical dial calibration for the v.f.o. unit. Notations indicate the calibrated ranges of coil sets listed under Fig. 1254 and in the coil-selection table. Details of calibration are given in the text.

riving at the correct adjustments. When proper adjustments have been made, there should be no appreciable change in the brilliance of the lamp at any setting of the gang condenser.

If a check on plate currents is desired, meters may be inserted temporarily by opening up the wiring underneath the chassis. With correct adjustments of the tickler windings, L_2, the oscillator plate current should run between 12 and 15 ma. The buffer plate current should run at about 19 ma. with the key open and increase one milliampere or less with the key closed. Large changes in this plate current will indicate too many turns on L_2.

• FEEDING CRYSTAL-OSCILLATOR STAGES

The output of the v.f.o. unit is sufficient to drive a type 807 or similar tube. Such a stage

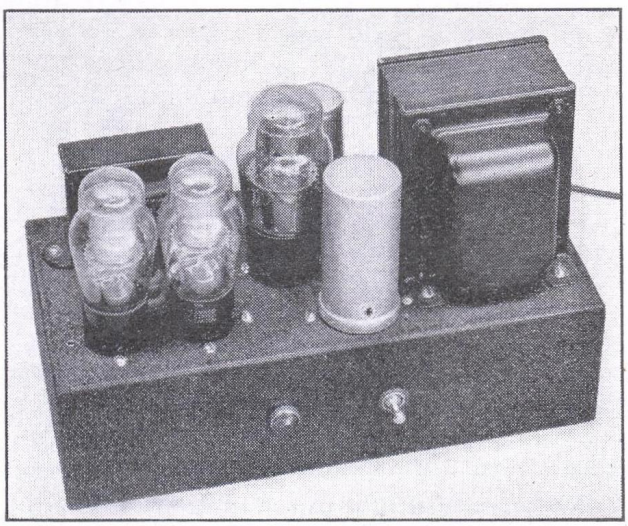

Fig. 1257 — Voltage-regulated power supply for the v.f. exciter unit. One filter choke is mounted underneath the chassis.

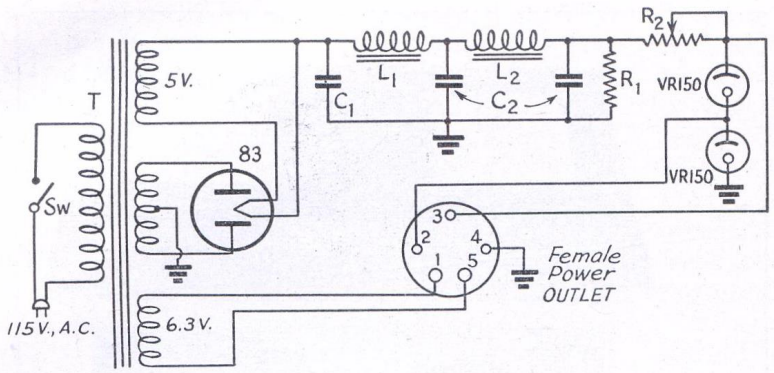

Fig. 1258 — Circuit diagram of the voltage-regulated power supply for the v.f.o unit.

C_1 — 8 μfd., 500-volt electrolytic (Mallory HD683).

C_2 — Dual-section, 450-volt electrolytic, 40 μfd. per section, one section on each side of L_2 (Mallory FPD238).

L_1, L_2 — 15 hys., 100-ma. (UTC R19).

R_1 — 25,000 ohms, 10-watt.

R_2 — 2500 ohms, 25-watt with slider.

T — Combination power transformer: 375 volts r.m.s. each side of center-tap, 100-ma.; 5 volts, 3 amp.; 6.3 volts, 6 amp. (UTC R12).

Sw — S.p.s.t. toggle switch.

Five-conductor shielded cable connects power-supply and v.f.o. unit. Shield is connected to pin No. 5 at each end.

may be link coupled to the unit by means of L_4 or capacity coupled by connecting the coupling capacity to the plate terminal of the 6L6. In the latter case, a readjustment of C_6 will be required to restore resonance, but retracking should not be necessary.

However, it is expected that the unit will be used more frequently to drive the crystal-oscillator stage of a crystal-controlled transmitter already in operation. While other methods of coupling between the crystal-oscillator stage and the v.f.o. unit may be devised, one satisfactory system which reduces the possibility of instability of the crystal-oscillator tube when coupled to the v.f.o. unit will be described in detail. Most crystal-oscillator stages are not sufficiently-well screened to permit operating the stage as a conventional straight amplifier with input and output circuits tuned to the same frequency. While the substitution for the crystal of a tuned circuit link-coupled to the output of the v.f.o. unit is the recommended method of coupling when the crystal stage is to be used as a frequency doubler, the stage will invariably break into oscillation if the same system is used for fundamental operation. One satisfactory method of preventing this is to switch the link line to the cathode circuit for fundamental operation. The system is shown applied to several types of crystal-oscillator circuits in Fig. 1259.

In each case, a tank circuit, C_gL_g, tuned to the frequency of the crystal which it supplants, replaces the crystal when the stage is to be operated as a frequency doubler. The insertion of the condenser C is required to prevent short-circuit of the grid leak. The tank circuit is coupled to the output of the v.f.o. through a link line connecting at the points marked *H-H*. The openings indicated in the cathode circuits may be closed by a shorting bar. It is important to keep the shorting-bar leads as short as possible, otherwise there is danger of self oscillation even though the tuning of the grid and plate tanks may differ widely. In Tri-tet and grid-plate circuits, the cathode tanks must be shorted as indicated.

When the crystal stage is to be operated as a straight amplifier, the grid tank is removed, leaving the crystal position open. The link line from the v.f.o. is shifted to the points marked

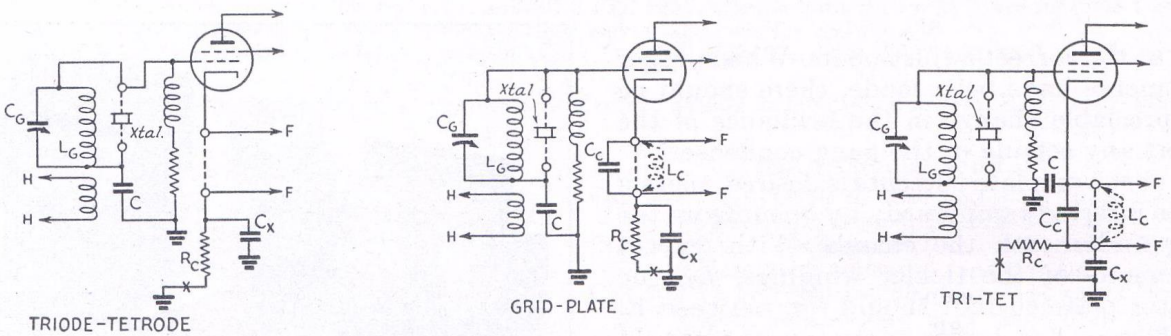

Fig. 1259 — Methods of coupling the output of the v.f.o. to crystal-oscillator stages of various types. See text for details. C is a mica capacity of 0.001 μfd. to prevent short-circuit of the grid leak. R_c and C_x are the usual oscillator cathode resistance and by-pass, respectively. C_c and L_c are the usual cathode-circuit tanks in the grid-plate and Tri-tet circuits. The v.f.o. link output is connected at H-H for harmonic operation of the crystal oscillator circuit, or to F-F for fundamental operation. C_g is a variable condenser of 100 μμfd. for the 1.75-Mc. band and 50 μμfd. for the 3.5-a nd 7-Mc. bands. Dimensions for L_g are as follows:

1.75-Mc. input — 64 turns No. 24 d.s.c., close-wound, 1½-in. diameter.

3.5-Mc. input — 40 turns No. 24, 1½-in. diameter, 1½-in. long.

7-Mc. input — 20 turns No. 18, 1½-in. diameter, 1½-in. long.

Link windings should consist of approximately 8, 6 and 5 turns, respectively, for the 1.75-, 3.5- and 7-Mc. bands, close-wound close to and below L_g.

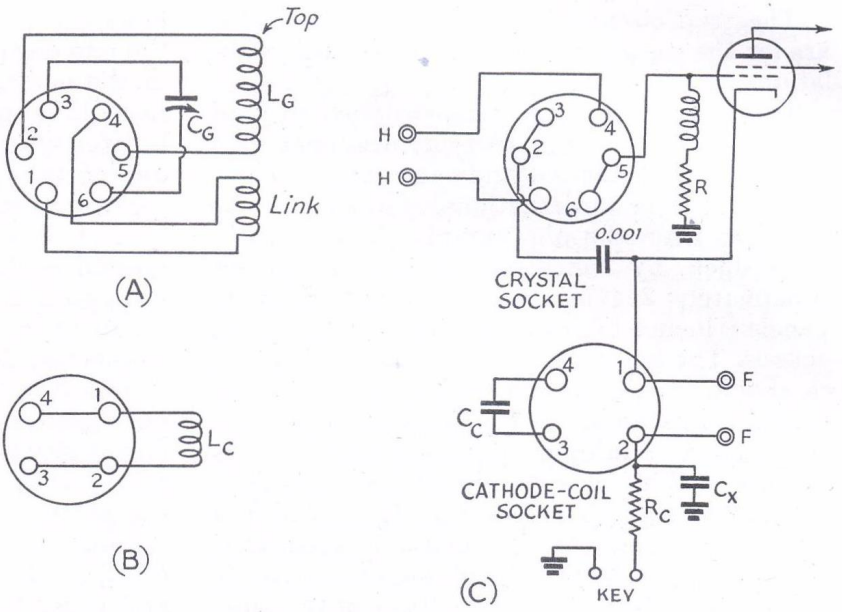

Fig. 1260 — Plug-in system for conveniently making connections in Tri-tet oscillator circuit for crystal or v.f.o. operation. See text for details. A shows the connections of the plug-in grid tank for doubler operation of the crystal stage with v.f.o. input. Values for L_g, C_g and link are given under Fig. 1259. B shows connections for the plug-in cathode coil, L_c, which is the usual Tri-tet cathode winding. C shows the circuit with socket connections. C_c is the usual Tri-tet cathode-tank capacity and R_c and C_x the usual cathode resistance and by-pass.

F-F and the cathode shorts indicated by the dotted lines removed. In Tri-tet or grid-plate oscillators, the cathode inductances and preferably the cathode tuning condensers also must be removed. If a cathode resistance is used, care should be taken to introduce the excitation between the cathode and the junction of the cathode resistance and its by-pass condenser.

If the v.f.o. is to be keyed, the key terminals of the crystal stage must be shorted and a small amount of fixed bias may have to be connected between grid leak and ground to prevent excessive plate current when the key in the v.f.o. circuit is open. If break-in keying is not desired, the v.f.o. may be operated continuously and the crystal stage keyed in the usual manner.

Values for the substitute grid tank coil are given in Fig. 1259. A fairly-high *L/C* ratio has been chosen and, in most cases, any one band may be covered without retuning of the grid tank, if it is set to resonance in the middle of the band. The remainder of the transmitter will be tuned as usual.

The details of a convenient plug-in system which takes care of all connections in shifting from Tri-tet crystal operation, used in most transmitters described in this chapter, to either fundamental or doubler operation with the v.f.o. unit are shown in Fig. 1260. The grid tank for doubler operation is plugged into the same 6-prong tube socket used by the crystal. Link connections to the v.f.o. are made through the pin jacks *H-H*. A short-circuiting wire connects the pin jacks *F-F* in the cathode circuit. The leads from the cathode-coil socket to these jacks and the shorting wire should be as short as possible. The cathode coil is removed from its socket.

For fundamental operation with the v.f.o., the tank is removed from the grid-circuit socket, the shorting wire is removed from *F-F* to which the link line from the v.f.o. is now shifted.

For crystal operation, the crystal is plugged into the grid-circuit between prongs *6* and *3* or between *5* and *2* and the cathode coil is plugged in its socket, automatically connecting in the cathode tuning condenser, C_c. The v.f.o. link line must be disconnected. Similar combinations may be worked out for other oscillator circuits.

• A GANG-TUNED 450-WATT PUSH-PULL AMPLIFIER AND DRIVER

Figs. 1261, 1263, and 1264 show a gang-tuned unit which may be added to the v.f.o. unit of Fig. 1251. As shown in the circuit diagram of Fig. 1262, it consists of a push-pull amplifier with 812s, or similar tubes, and an 807 driver stage the tuning controls of which are arranged to couple to the tuning shaft of the v.f.o. unit so that once adjusted for any given band, the entire transmitter may be tuned simultaneously with the single dial of the v.f.o. unit.

The two stages are coupled inductively with the tuning condensers connected across the grid winding. The use of inductive coupling solves the problem of balanced excitation to the amplifier without the dual tuning controls required with link coupling. C_1 and C_3 are the usual tank condensers, which are used for setting the circuits to the desired band. C_2 and C_4 are the band-tuning condensers. The shafts of these two condensers are connected together and also to the tail shaft of C_7 in the v.f.o. unit through a hole cut in the rear of the v.f.o. cabinet. The two stages are adjusted for tracking by varying the portion of the coils across which C_2 and C_4 are connected.

The trap circuits, L_4-C_5, L_5-C_6 and L_6-C_7, are for the suppression of u.h.f. parasitic oscillations.

The milliammeter may be switched to read 807 cathode or screen current, amplifier grid current or amplifier cathode current.

Most of the constructional details may be obtained from the photographs. The 10-inch, by 17-inch, by 3-inch chassis is elevated approximately 2¼ inches by supporting it on panels 8 inches high running the length of the chassis. The holes through the panel and chassis should be slightly oversize to permit an accurate adjustment of the chassis height for lining up the tuning-condenser shafts.

Coils — While homemade coils of equivalent dimensions may be substituted, many will find it more convenient to alter manufactured coils. If possible, the National coils suggested for L_1 should be obtained minus the links and mountings. Stripped, it will be found that these coils fit snugly inside the B & W coils used for L_2 and that no special care is required to hold them central to prevent short circuits between L_1 and L_2. The plastic strips on each coil take care of this admirably. The link winding should be removed from L_2 by cutting it away. The free pins in the base thus provided will serve for the connections to C_2. The tubular rivets at each end of the bottom spacing strip of the coil should be drilled or filed out and a ¾-inch 6–32 machine screw substituted by which a Johnson banana plug may be fastened at each end. The ends of L_1 are connected to these plugs.

In the chassis, on either side of the coil socket and directly below the banana plugs, a hole should be drilled. The one on the right-hand side should be ¼-inch in diameter, while the one on the left-hand side should be ½-inch in diameter. A jack to fit the banana plug should be placed in a National polystyrene button-type insulator with the shoulder filed off and the hole drilled out to fit the jack. This jack, mounted in the ¼-inch hole with the insulator as a spacer, then serves to make the ground connection for L_1. The ½-inch hole is for a second jack insulated from the chassis by a pair of button insulators which serves as the connection for the other end of L_1.

The B & W type TVH coils are selected not only because they are of the proper size for the power involved, but also because they are supplied with extra plugs which may be used for the ganging taps for C_4.

Both L_2 and L_3 require no bandspread taps for the 1.75-Mc. band; the plugs for the taps and those for the ends of the coils are simply connected together, connecting the bandspread and padding condensers in parallel for this band.

• COMBINING UNITS

Fig. 1264 shows how the two units are joined together. The output of the v.f.o. and the input of the 807 driver stage are coupled capacitively, a short wire connecting the binding post in the v.f.o. unit with the coupling condenser, C_{10}, in the ganged unit. Large holes are made in the rear of the v.f.o. cabinet and the end of the chassis to clear a small National rigid shaft coupling. The height of the chassis should be adjusted so that the shafts of the two units line up perfectly. If the condenser gangs in each unit have been mounted as described, the shafts will be lined up when the

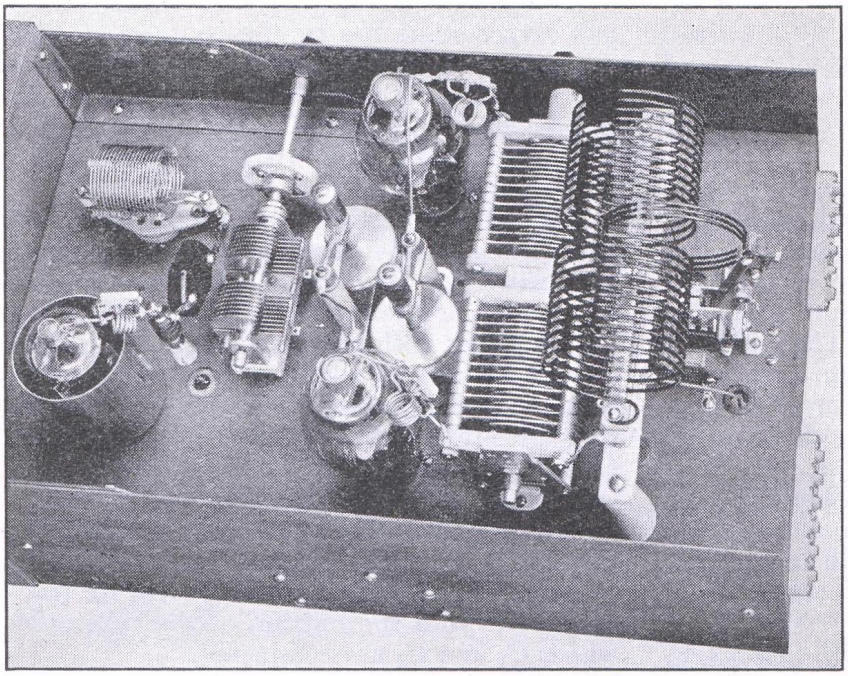

Fig. 1261 — Top view of the gang-tuned driver and push-pull amplifier designed to work with the v.f.o. unit of Fig. 1251. The chassis is elevated by 17-inch, by 8-inch panels on each side. The 807 socket, which is mounted an inch below the chassis top on spacers, and the socket for the coupling transformer, L_1–L_2, at the left-hand end of the chassis, are on either side of the bandspread condenser, C_2, underneath. The 807 padding condenser, C_1, is next to the right with an insulating coupling in its shaft which is 5½ inches from the left-hand end of the chassis. The shaft of the final-amplifier padding condenser, 5½ inches from the right-hand end of the chassis, is also fitted with an insulating coupling. The condenser is mounted on National polystyrene button insulators to bring its shaft level with that of C_1. The sockets for the 812s are at either end of C_3 with the neutralizing condensers in between to make the neutralizing leads short. The jack bar for the tank coil, L_3, is mounted on 2-inch cone insulators.

bottom edge of the chassis is 2¼ inches above the bottom edges of the supporting panels.

The two units are fastened together with 7-inch triangular brackets, the tops of which have been cut off to fit, on each side of the chassis. The excitation lead to the grid of the 807 passes through a grommet-lined hole in the back of the v.f.o. cabinet.

Tuning — Power-supply requirements are covered in the section of the complete gang-tuned transmitter which follows.

If coil dimensions have been followed carefully, there should be little difficulty in lining up the various stages. Make certain that the shaft couplings are adjusted so that all condensers of the gang arrive at maximum or minimum capacity simultaneously. Coils should be plugged in the various stages for the desired band, using the coil-selection table as a guide.

With the tuning control set for the high-frequency edge of the band, the voltage-regulated supply and the bias supply should be turned on simultaneously. This will apply plate voltage to the v.f.o. unit and screen voltage to the 807. Using the 807 screen current as an indicator, the trimmer of the buffer stage in the v.f.o. unit should be lined up. Maximum screen current indicates resonance. The key should not be held closed for excessively-long periods to limit screen heating. Turning to the low-frequency end of the band should show negligible change in screen current. Should there be evidence of poor tracking, the buffer stage may be brought into line again as discussed in the section describing the tuning of the v.f.o. unit.

Plate voltage may now be applied to the 807 and the stage tuned to resonance with C_1. A check should now be made for parasitic oscillation. This is done by reducing plate voltage

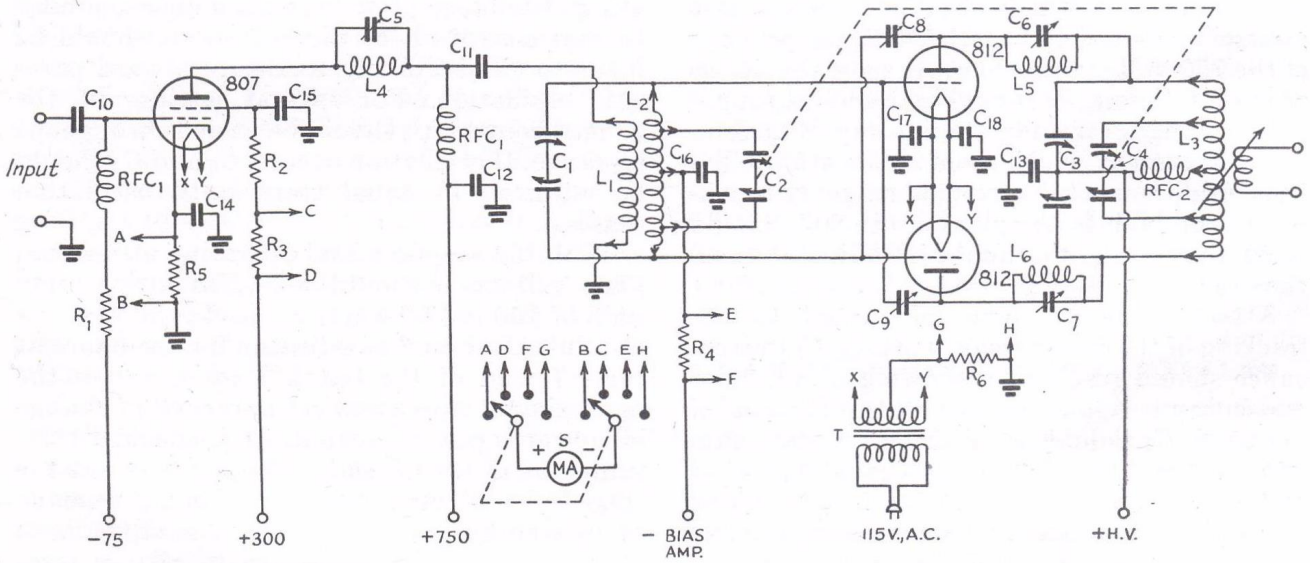

Fig. 1262 — Circuit diagram of the gang-tuned unit.

C_1 — 140 μμfd. per section (Hammarlund MCD-140-S).
C_2 — 100 μμfd. per section (Hammarlund MCD-100-S).
C_3 — 150 μμfd. per section, 0.07 in. spacing (Johnson 150ED30).
C_4 — 65 μμfd. per section, 0.07-in. spacing (Hammarlund HFBD-65-E).
C_5, C_6, C_7 — 30-μμfd. mica trimmer (National M-30).
C_8, C_9 — Neutralizing condensers (National NC-800).
C_{10} — 100 μμfd., mica.
C_{11}, C_{12} — 0.001 μfd., mica, 1000-volt.
C_{13} — 0.001 μfd., mica, 7500-volt (Aerovox 1623).
C_{14}, C_{15}, C_{16}, C_{17}, C_{18} — 0.01 μfd.
MA — Milliammeter, 100-ma. scale.
R_1 — 25,000 ohms, 1-watt.
R_2 — 20,000 ohms, 10-watt, variable.
R_3, R_4 — 25 ohms, 1-watt.
R_5 — Meter multiplier resistance, 2-times, wound with No. 26 wire.
R_6 — Meter-multiplier resistance, 5-times, wound with No. 24 wire.
RFC_1 — 2.5-mh. r.f. choke.
RFC_2 — 500-ma. r.f. choke (Hammarlund CH500).
S — Two circuit, 4-contact switch (Mallory 3234J).
T — Filament transformer, 6.3-volt, 10-amp. (Thordarson T19F99).
L_1 — Mounted inside L_2.
1.75 Mc. — 45 turns No. 24, 1¼-in. diam., 1⅜-in. long (National AR80 unmounted, 11 turns removed).
3.5 Mc. — 22 turns No. 22, 1¼-in. diam., 1¼-in. long (National AR40, unmounted, 6 turns removed).
7 Mc. — 14 turns No. 20, 1¼-in. diam., 1¼-in. long (National AR20, unmounted).
L_2 — 1.75 Mc. — 58 turns No. 24, 1⅝-in. diam., 2¼-in. long, taps at ends of coil (B & W JCL-160, no link).
3.5 Mc. — 28 turns No. 22, 1⅝-in. diam., 1½-in. long, taps at 3 turns from each end (B & W JCL-80, no link, 8 turns removed from each end).
7 Mc. — 18 turns No. 16, 1⅝-in. diam., 1½-in. long, taps at 6 turns from each end (B & W JCL-40, no link, 5 turns removed from each end).
L_3 — 1.75 Mc. — 60 turns No. 16, 5½-in. long, 2½-in. diam., ⅝-in. space at center for link, taps at ends of coil (B & W TVH-160).
3.5 Mc. — 38 turns No. 14, 5¼-in. long, 2½-in. diam., ¾-in. space at center for link, taps at 3¾ turns from each end (B & W TVH-80).
7 Mc. — 24 turns No. 12, 5¼-in. long, 2½-in. diam., ¾-in. space at center for link, taps at 7¾ turns from each end (B & W TVH-40).
L_4 — 5 turns No. 14, ⅜-in. diam., 1-in. long.
L_5, L_6 — 4 turns No. 14, ⅝-in. diam.

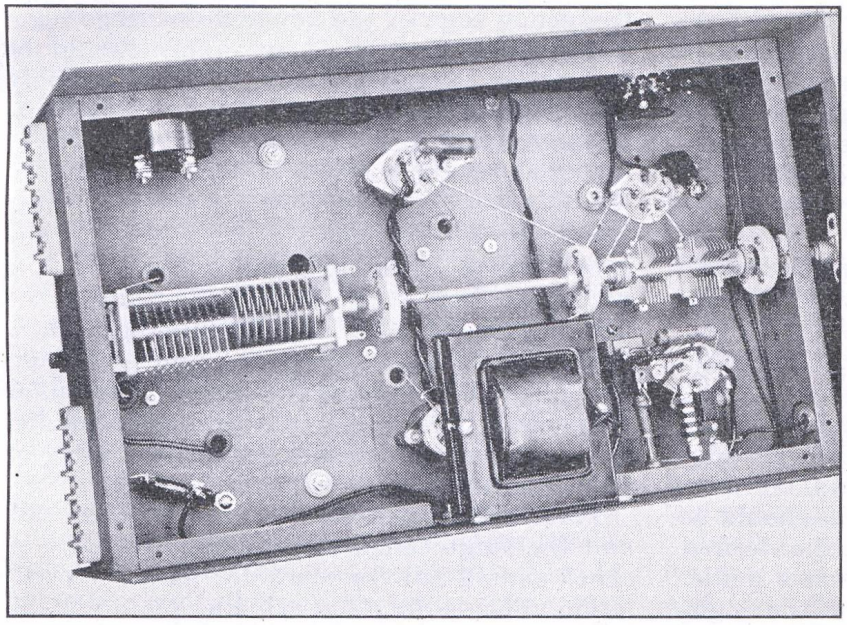

Fig. 1263 — Bottom view of the gang-tuned unit. The final-amplifier bandspread condenser, C_4, is mounted as far to the left as possible on National polystyrene button insulators stacked to bring the shaft level with that of the driver bandspread condenser, C_2, to the right. The shafts of the two condensers are connected with flexible insulating couplings. C_2 is turned around so that its tail shaft couples to the shaft of the v.f.o. unit. The mounting hole of the condenser should come 2½ inches from the left-hand edge of the chassis. The shaft stop pin should be removed. The filament transformer is mounted below the chassis at the center.

with a lamp of sufficient size to reduce the plate voltage to about half in series with the primary of the 750-volt transformer. At several settings of the v.f.o. unit, C_1 should be varied throughout its range, carefully noting any change in cathode current which would indicate oscillation. Additional check may be made by touching a neon bulb to the plate of the 807. Should oscillation occur, C_5 should be adjusted until the oscillation is suppressed.

Attention should now be turned to the tracking of the driver stage. Turning C_1 to resonance should result in a showing of amplifier grid current. Again starting at the h.f. end of the band, C_1 should be adjusted for maximum grid current. If there is a serious falling off of grid current as the unit is tuned to the l.f. end of the band, a check should be made to determine if readjusting C_1 will bring the grid current back up. If it does not, the size of L_1 must be increased by one or two turns. If, however, retuning of C_1 shows the tuning to be off resonance at the l.f. end of the band, it should be carefully noted whether an increase in the capacity of C_1 or a decrease is necessary to restore resonance. If an increase in C_1 is required, the taps of C_2 should be spread slightly farther apart, or brought slightly closer together should a decrease in C_1 be required. After each check, the tuning of the unit should be returned to the h.f. end and realigned before again checking the l.f. end.

However, should the first check at the l.f. end of the band show an increase in grid current over that obtained at the h.f. end, a turn or two should be removed from L_1 after which the tracking should again be checked as previously described.

With substantially-constant grid current over the band, the amplifier may be neutralized in the usual manner. With the amplifier operating at reduced plate voltage, a check, similar to that described for the 807 stage, should be made to eliminate any tendency toward parasitic oscillation. For several settings of the ganged control, C_3 should be varied throughout its range. If oscillation occurs, C_6 and C_7 should be adjusted in equal steps until oscillation ceases.

With the amplifier still operating at reduced plate voltage, it should be loaded with a lamp bulb of 150 to 200 watts connected to the output link. C_3 should be adjusted for resonance at the h.f. end of the band. Tuning across the band should now show no appreciable change in power input or output. If a check, by retuning C_3 at the l.f. end of the band, shows the stage to be off resonance, a note should be made as to whether an increase in the capacity of C_3 or a decrease is necessary to restore resonance. If an increase is required, the taps of C_4 should be spread slightly, while a decrease in C_3 would indicate that the taps of C_4 should be brought slightly closer together. Here, again, each adjustment of tracking should be followed by realigning at the h.f. end of the band before making a check on the new adjustment at the l.f. end.

If coil dimensions have been followed carefully, these tracking adjustments should not be required. They are described to take care of cases in which the constructor may have gone astray at some point, or in which the design has been changed to suit other requirements. Naturally, the adjustments for the higher-frequency bands must be made in smaller steps than those required for the lower-frequency bands.

At the plate voltages recommended, the screen current, when lining up the v.f.o. output stage, should run between 5 and 10 ma. Cathode current to the driver stage, when tuned

and loaded should be between 70 and 100 ma., while grid current to the final amplifier should exceed 50 ma. with the amplifier loaded to the rated plate current of 300 ma. at 1500 volts. Under operating conditions, the driver screen voltage should run close to 250 volts. When adjustments are correct, the power output across any of the three bands should remain constant at 300 watts.

For 'phone operation with plate modulation. the input to the final amplifier should be reduced to 250 ma. at 1250 volts.

The tube tables of Chapter Twenty should be consulted for operating conditions for other tubes, should they be used in the final amplifier.

• COMPLETE VARIABLE-FREQUENCY GANG-TUNED TRANSMITTER

Fig. 1264 shows how the two units of Figs. 1251 and 1264 may be combined for gang tuning. The regulated supply of Fig. 1257 will furnish screen voltage for the 807 by bringing out a tap from the junction of the resistors R_1 and R_2. The unit of Fig. 1247 will furnish biasing voltages for both 807 and final amplifier. The voltage divider resistance of the bias unit should be adjusted with 4000 ohms in the R_2 portion and 4000 ohms in the R_3 portion. Plate voltage for the 807 may be obtained from the unit of Fig. 1238, while the unit of Fig. 1245 will furnish plate voltage for the output amplifier. A suitable antenna tuner for the unit is the one shown in Fig. 1249.

For convenience in tuning, the ganged unit is designed to be placed within reach on the operating table. The power-supply units may be mounted in a 26¼-inch rack under the operating table, while the antenna tuner may be mounted within reach over the receiver or transmitter.

COIL-SELECTION TABLE FOR GANGED UNIT

Band	*Osc.*	*Buffer*	*Driver*	*Final*
1.75 Mc.	No. 1	No. 1A	1.75 Mc.	1.75 Mc.
3.5 Mc.	No. 2	No. 2A	3.5 Mc.	3.5 Mc.
7 Mc.	No. 3	No. 3A	7 Mc.	7 Mc.
14 Mc.	No. 3	No. 3A	14 Mc.	14 Mc.

For rapid setting of the band-set condensers, the dials should be furnished with paper scales upon which the setting for each band is marked, rather than to record the numerical dial setting on a chart which must be consulted each time bands are changed.

Similarly, to simplify antenna tuning and make it possible to adjust the antenna without putting a signal on the air, the antenna-tuner dial should be furnished with a paper scale which may be calibrated in settings in terms of receiver- or v.f.o.-dial settings. Since antenna tuning should not be critical, the dial need be calibrated for only several scattered points throughout each band. With an arrangement such as this, it is merely necessary to set the v.f.o. dial to the frequency desired and the antenna-tuner dial to a corresponding setting while waiting for the desired station to sign off.

• TWO-TUBE PLUG-IN COIL EXCITER

In the two-tube exciter or low-power transmitter shown in the photograph of Figs. 1265, 1267 and 1268, a 6L6 oscillator is used to drive an 807 as an amplifier-doubler. As shown in the diagram of Fig. 1266, a Tri-tet circuit, which

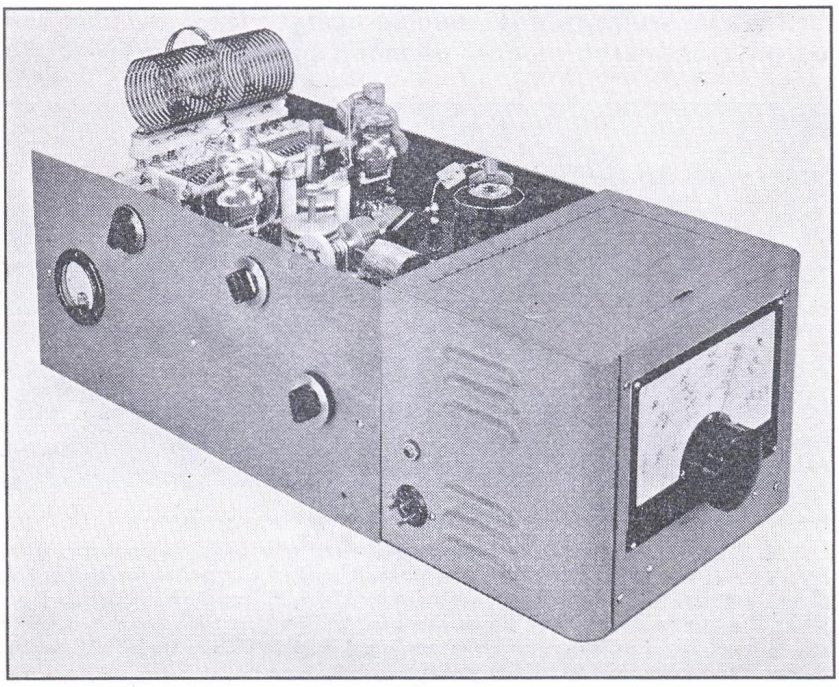

Fig. 1264 — The v.f.o. unit of Fig. 1251 combined with the gang-tuned driver and push-pull final amplifier. The milliammeter and the meter switch are placed on the panel to balance each other at opposite ends of the chassis. Holes for these must be cut in the chassis edge. The control at the left is for setting the final-amplifier padder or band-setting condenser, C_3, while the one to the right is for the driver padder. The chassis is 10 inches, by 17 inches, by 3 inches.

is used to obtain harmonic output, is reduced to the simple tetrode circuit for oscillator output at the crystal fundamental by short-circuiting the cathode tank circuit. Sufficient oscillator output at the fourth harmonic of the crystal frequency is obtainable to drive the 807, which may be operated as either a straight amplifier or frequency doubler, making it possible to obtain an output of 25 to 50 watts or more in four bands from a single crystal of properly-chosen frequency.

The exciter is constructed in a manner which conserves vertical panel space and which renders the coils and tubes readily accessible for change. The crystal socket is at the front, so that frequencies within a band may be changed without the necessity for going to the rear.

The entire unit is designed to operate from a single 250-ma. supply delivering up to 750 volts (see Fig. 1239), the maximum voltage at which the 807 is designed to operate. A fixed bias of 45 volts, which may be obtained from a battery, is required for the 807. In the keying system shown, both the oscillator and amplifier are keyed simultaneously in the common cathode lead. A single milliammeter with a scale of 200 ma. may be switched to read the plate current of either stage.

Tuning — Since the 807 requires no neutralizing, tuning the exciter consists chiefly of selecting the proper coils and tuning the two plate circuits to resonance. Because it is possible to double or quadruple frequency in the plate circuit of the oscillator and to double frequency in the plate circuit of the 807 as well, there are several possible combinations of coils and crystals which will produce the same output frequency. However, much better efficiencies are obtainable when operating the 807 as a straight amplifier, rather than doubling, so that it is always advisable to operate the output stage in this manner whenever possible. This possibility occurs in all cases except where it is necessary to obtain output at the eighth harmonic of the crystal frequency — 14-Mc. output from a 1.75-Mc. crystal or 28-Mc. output from a 3.5-Mc. crystal. The accompanying chart will enable the operator to choose at a glance the combination required for the desired output from a given crystal. It also indicates the position in which SW_1 should be thrown. Always be sure that the crystal frequency chosen is one whose harmonics will fall in the band in which operation is to take place.

With the proper coils and crystal in place, SW_1 thrown to the correct position and both condensers set at minimum capacity (100 divisions on dial), the high-voltage should be applied with the meter switch in the second position where it will read plate current to the 807. If all resistances are correct and the plate voltage 750, the plate current should run approximately 25 ma. Now close the key and turn the oscillator tank condenser to the approximate setting given in the accompanying table and watch for a rise in amplifier plate current. When this occurs, tune the oscillator for maximum amplifier plate current. Do not hold the key closed for long periods under this condition. As soon as the peak has been obtained, tune the amplifier plate tank condenser for resonance as indicated by a pronounced dip in plate current. Should the points of response on either condenser be found at points on the scale differing appreciably from those given in the table, each circuit should be checked with an absorption wavemeter to make sure that it is tuned to the correct frequency, since the ranges covered by some of the coils include odd harmonics which result in responses outside the amateur bands. Once checked, the dial settings can be logged for quick resetting to the desired frequency.

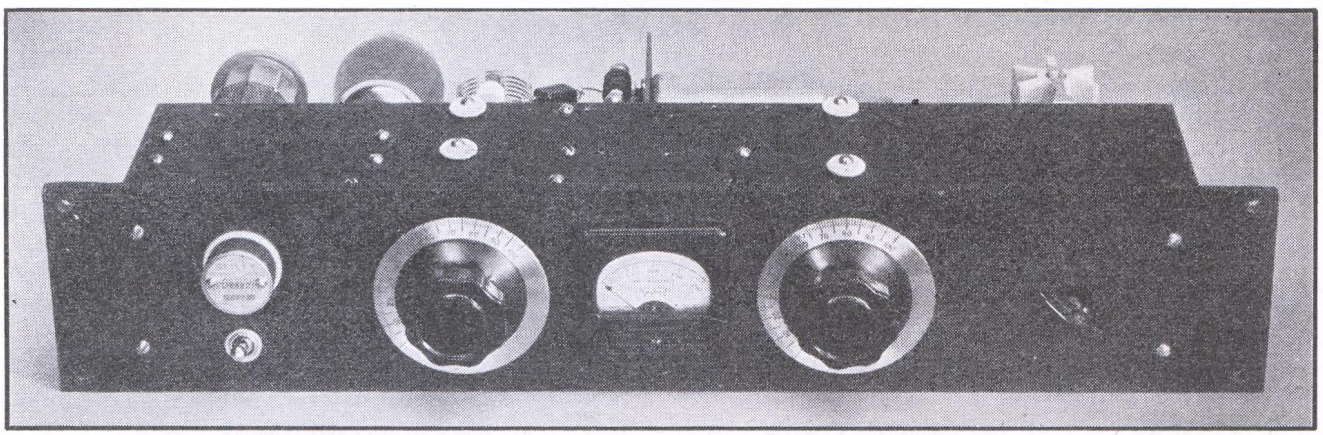

Fig. 1265 — The two-tube plug-in coil exciter is built to conserve space in the relay rack. The panel is 3½ in. by 19 in. A clearance hole is cut in the left end of the panel for the crystal socket which is mounted in the chassis directly above the cathode-circuit switch. The left-hand dial controls the tuning of the oscillator plate tank circuit, while the one to the right is the control for the output tank circuit. The switch at the right-hand end is for the 200-ma. meter. The outer ceramic buttons used in providing insulating mountings for the tank condensers are the only things appearing on top of the chassis.

With the amplifier tuned, the meter switch may now be thrown to the first position, where the meter reads oscillator plate current, and the oscillator tank circuit tuned for minimum plate current consistent with satisfactory keying. Active crystals will usually oscillate continuously in the Tri-tet circuit, regardless of the setting of the tank condenser. When the tetrode circuit is in use, however, the circuit will oscillate only so long as the plate circuit is tuned within relatively narrow limits. SW_1 should never be left open when the oscillator plate circuit is tuned to the crystal frequency. The plate current to the oscillator will be found to vary widely in value, depending upon whether output is taken at the fundamental, second harmonic or fourth harmonic. At the specified plate voltage, it should run between 40 and 50 ma. at resonance with the plate circuit tuned to the crystal fundamental or second harmonic. When tuned to the fourth harmonic, the plate current will normally run between 85 and 95 ma.

Because the plate and screen of the 6L6 are operated from a voltage divider, their voltages will vary considerably with conditions of tuning. Plate voltage will vary between 400 and 450 except when operating at the fourth harmonic when it will normally fall to 340 volts or so. The screen voltage varies simultaneously from 280 to 210 volts or so.

The tank coils for the output circuit are fitted with link windings for coupling to a following stage with link input, to a low-impedance transmission line feeding an antenna or to an antenna coupler. In most cases,

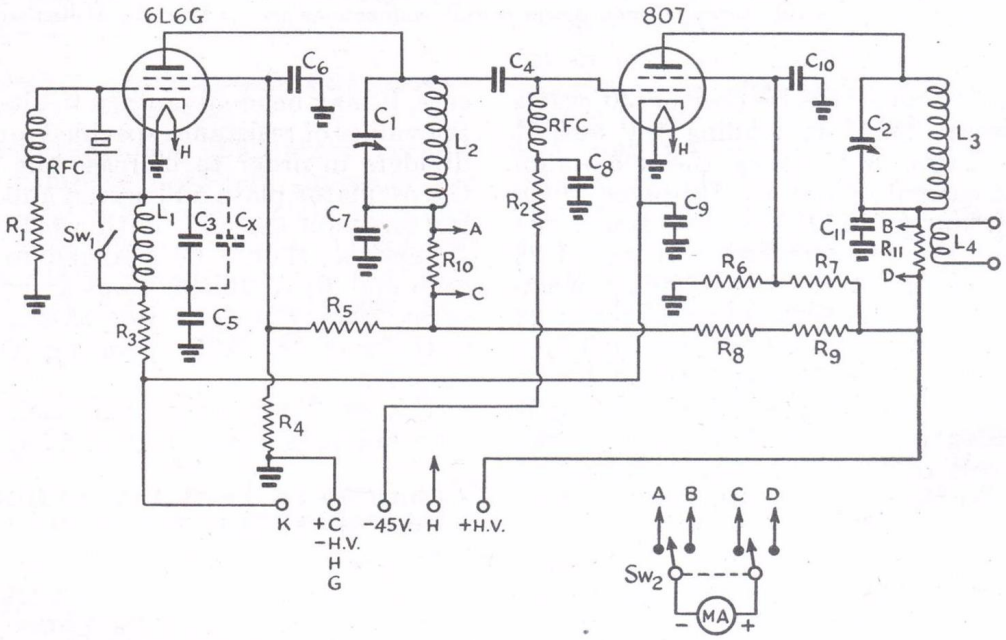

Fig. 1266 — Circuit diagram of the two-tube plug-in coil exciter.

C_1 — 140-$\mu\mu$fd. midget variable (Hammarlund MC-140M).
C_2 — 150-$\mu\mu$fd. variable (Cardwell MR150BS).
C_3 — 100-$\mu\mu$fd. mica.
C_4 — 20-$\mu\mu$fd. mica.
C_5, C_6, C_7, C_8, C_9, C_{10} — 0.01-μfd., 600-volt paper.
C_{11} — 0.01-μfd., 1000-volt paper.
C_x — 100-$\mu\mu$fd. mica (see text).
MA — Milliammeter, 0-200-ma. scale (Triplett Mod. 227A).
R_1 — 20,000 ohms, 1-watt.
R_2 — 25,000 ohms, 2-watt.
R_3 — 200 ohms, 2-watt.
R_4 — 10,000 ohms, 25-watt.
R_5 — 3500 ohms, 25-watt.
R_6, R_7 — 15,000 ohms, 25-watt.
R_8, R_9 — 1250 ohms, 50-watt.
R_{10}, R_{11} — 10 ohms, 1-watt.
R.f.c. — 2.5-mh. r.f. choke.
SW_1 — S.p.s.t. toggle switch.
SW_2 — D.p.d.t. rotary switch (Mallory 3222J).
L_1 — 1.75-Mc. crystals — 32 turns No. 22 d.s.c., close-wound.
3.5-Mc. crystals — 10 turns No. 22 d.s.c., 1-in. long. Note: Cx connected in parallel with this coil; mounted in form.
7-Mc. crystals — 6½ turns No. 22 d.s.c., ¾-in. long.
Above coils wound on Hammarlund 1½-in. diam. 4-pin forms.
L_2 — 1.75 Mc. — 56 turns, 1¼-in. diam., 1¾-in. long, 54 μhys. (National AR80-no link).
3.5 Mc. — 28 turns, 1¼-in. diam., 1½-in. long, 15 μhys. (National AR40-no link).
7-Mc. — 14 turns, 1¼-in. diam., 1¼-in. long, 4.2 μhys. (National AR20 — no link).
14 Mc. — 8 turns, 1¼-in. diam., 1½-in. long, 1.25 μhys. (National AR10 — no link).
28 Mc. — 4 turns, 1¼-in. diam., ¾-in. long. 0.5 μhy. (National AR10, 4 turns removed — no link).
L_3 — 1.75 Mc. — 50 turns, 1½-in. diam., 2⅛-in. long, 52 μhys. (Coto Coil CS6160E).
3.5 Mc. — 25 turns, 1½-in. diam., 1⅝-in. long, 16 μhys. (Coto Coil CS680E).
7 Mc. — 16 turns, 1½-in. diam., 1⅞-in. long, 5.7 μhys. (Coto Coil CS640E).
14 Mc. — 8 turns, 1½-in. diam., 1⅝-in. long, 1.5 μhys. (Coto Coil CS620E).
28 Mc. — 4 turns, 1½-in. diam., 1½-in. long, 0.7 μhys. (Coto Coil CS610E).

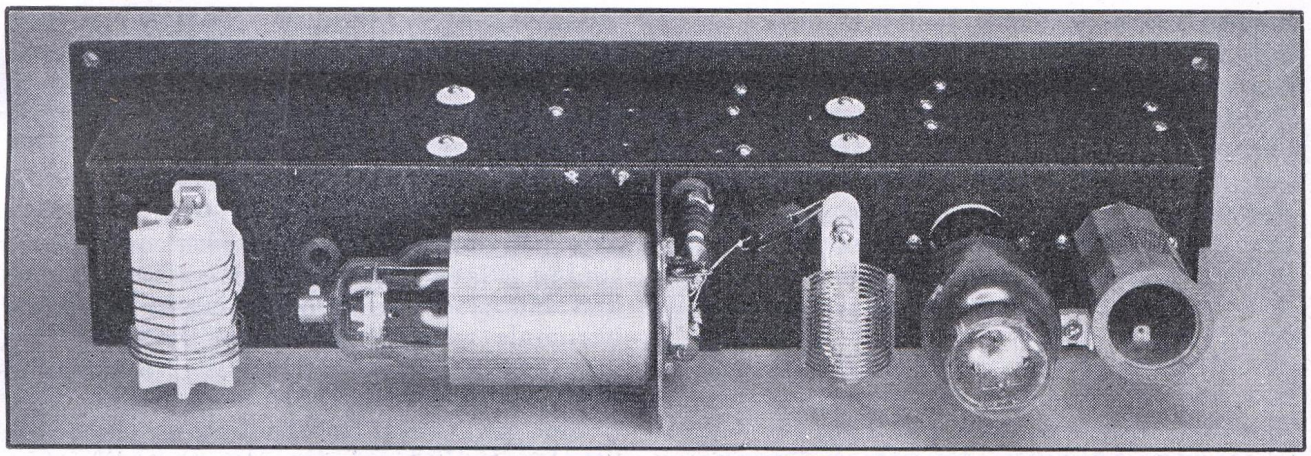

Fig. 1267 — The 4-prong socket for the cathode coil, the octal for the 6L6 oscillator and the 5-prong socket for the Coto coils used in the output tank circuit are sub-mounted in the rear edge of the chassis. The mounting for the National AR coils used in the oscillator plate circuit is fastened on short cone insulators, while the socket for the 807 is sub-mounted in the small steel partition. The grid r.f. choke and screen and cathode by-pass condensers are fastened directly to the socket. Large clearance holes lined with grommets are provided for passing the connections through the chassis from the oscillator plate coil to the tank condenser and for the 807 plate lead. A pair of pin jacks serves as the link output terminals and power-supply connections are made to the Millen strip at the right end.

the maximum rated dissipation of 30 watts will not be exceeded in loading the output circuit until the 807 draws the maximum rated plate current of 100 ma. However, when doubling frequency in the output stage, the plate current should be limited to 70 ma. at 28 Mc. and 80 ma. at 14 Mc. and to 90 ma. when operating the 807 as a straight amplifier at 28 Mc. Power output under these conditions should average 40 to 55 watts on all bands so long as the 807 is operated as a straight amplifier. When doubling frequency in the output circuit to 14 and 28 Mc., the output will normally be reduced to about 27 and 18 watts respectively.

Amplifier screen voltage will normally vary between 240 and 300 volts, the higher values obtaining when quadrupling in the oscillator.

If the exciter is operated from a power supply of lower voltage, the power output will, of course, be reduced in proportion. In such a case, it may be of advantage to alter somewhat the values of resistance specified for the voltage dividers in order to increase the voltages on the oscillator plate and screen and also that of the screen of the 807. With a 600-volt supply, R_8 and R_9 should be changed to 1000 ohms each and R_4 to 20,000 ohms and R_5 to 10,000 ohms. Power output will average 30 to 35 watts with the 807 operating as a straight amplifier.

The oscillator circuit may be arranged for v.f.o. input as shown in Fig. 1260.

• COMPLETE 75-WATT ALL-BAND TRANSMITTER WITH PLUG-IN COILS

If it is desired to feed the unit of Fig. 1265 into an antenna as a complete transmitter, it may be combined with the power-supply unit of Fig. 1238, which will furnish heater and plate voltages, and the antenna-tuning unit of Fig. 1216 with the large condensers. A 45-volt

COIL AND TUNING TABLE FOR TWO-TUBE PLUG-IN COIL EXCITER

Xtal Band Mc.	*Output Band Mc.*	*SW_1*	*L_1 Band Mc.*	*C_1L_2 Band Mc.*	*C_2L_3 Band Mc.*	*C_1**	*C_2**
1.75	1.75	Closed	1.75	1.75	1.75	10	10
1.75	3.5	Open	1.75	3.5	3.5	10	30
3.5	3.5	Closed	3.5	3.5	3.5	10	30
1.75	7	Open	1.75	7	7	20	50
3.5	7	Open	3.5	7	7	20	50
7	7	Closed	7	7	7	20	50
1.75	14	Open	1.75	7	14	20	70
3.5	14	Open	3.5	14	14	35	70
7	14	Open	7	14	14	35	70
3.5	28	Open	3.5	14	28	35	80
7	28	Open	7	28	28	75	80

* Approx. settings for low-frequency ends of bands with dial reading zero at full capacity of condenser.

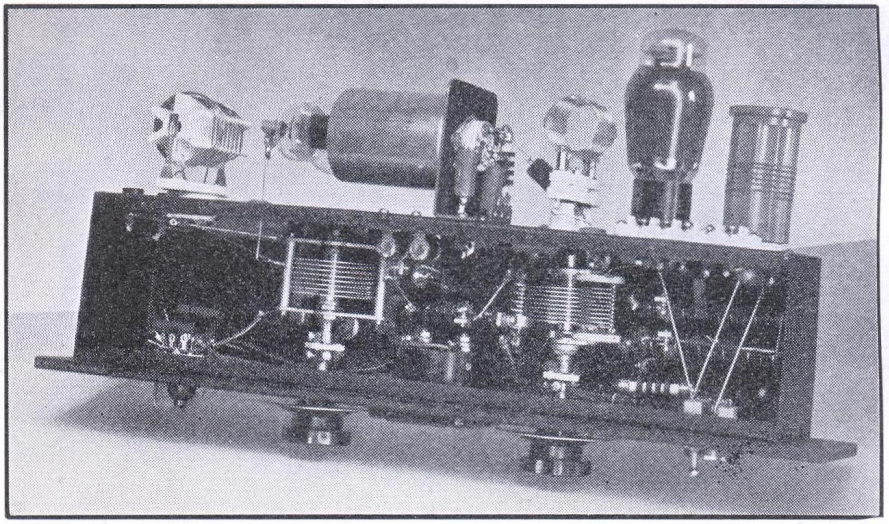

Fig. 1268 — Space inside the 4-in. by 17-in. by 3-in. chassis has been utilized to the greatest extent possible. R_8 and R_9 are to the right of the oscillator tank condenser, while R_4, R_5, R_6 and R_7 are mounted to the rear of the meter. The oscillator r.f. choke and grid leak are fastened to the crystal socket. Connections between the crystal socket and cathode switch are made directly and kept well-spaced. Meter-shunting resistances are fastened to the meter switch. Both tank-condenser shafts must be fitted with insulated couplings and panel bearings.

battery will also be required for bias. The three units may be placed in a small table rack with a total height of only 17½ inches.

• A PUSH-PULL AMPLIFIER FOR 200-TO-500-WATTS INPUT

Figs. 1269, 1271 and 1272 show various views of a compact push-pull amplifier for tubes of the 1500-volt, 150-ma. class, although the design is also suitable for those of the 1000-volt, 100-ma. class. With the lower voltages, a plate tank condenser with a plate spacing of 0.05 inch and smaller tank coils may be used.

The circuit, shown in Fig. 1270, is quite conventional with link coupling at both input and output. C_{11} and C_{12} are plug-in fixed air capacitors for the 1.75-Mc. band to eliminate the necessity for an unduly-large variable tank condenser to cover this one band. The circuits L_3-C_6 and L_4-C_5 are traps important for the prevention of u.h.f. parasitic oscillations. The 100-ma. meter may be shifted between the grid and cathode circuits for reading either grid current or cathode current. When shifted to read cathode current, it is shunted by a resistance, R_2, which multiplies the scale reading by five. This resistance is wound experimentally with No. 26 copper wire to give the desired multiplication.

Construction — The mechanical arrangement shown in the photographs results in a compact unit, requiring a minimum of panel space. The tank condenser is mounted on the left-hand partition (Fig. 1271) at a height which brings its shaft down 2⅝ inches from the top of the panel. The plate tank-coil jack bar is mounted centrally with the condenser on spacers which give a ½-inch clearance between the strip and the partition. The socket for the plate padder, C_{12}, is mounted in the lower rear corner of the left-hand partition. C_{10} is mounted with a small angle on the partition under the center of C_2. Leads from both ends of the rotor shaft are brought to one side of C_{10} for symmetry.

The two tube sockets are mounted in a line through the center of the chassis and at opposite ends of the plate tank condenser. They are spaced about one inch below the chassis on long machine screws. The neutralizing condensers are placed between the two tubes so that the leads from the plate of one tube to the grid of the other are short. The r.f. choke is mounted just above the tank condenser.

The right-hand partition is cut out at the forward edge to clear the meter. This cut-out is readily made with a socket punch and hack-saw. The socket for the grid tank coil is mounted 4½ inches behind the panel, just above the chassis line. The grid-circuit padder, C_{11}, is fitted with banana plugs which mount in jacks set in the right-hand partition just behind the grid coil. The jacks are insulated from the metal by mounting them in National polystyrene button insulators which have been drilled out to fit.

The grid tank condenser, C_1, is mounted under the chassis without insulation. Large clearance holes, lined with rubber grommets, are drilled for connecting wires which must be run through the chassis or partitions. The parasitic traps are made self-supporting in the plate leads from the tank condensers to the tube caps. The panel is placed so that the plate tank-condenser shaft comes at the center. The meter switch is mounted to balance the control of C_1.

Power Supply and Excitation — The T40s shown in the photographs operate at a maximum plate voltage of 1500 for c.w. work. For this, the unit shown in Fig. 1245 is suitable. The supply shown in Fig. 1248, minus the VR-tube branch, will provide the biasing voltage required for plate-current cut-off. R_2 should have a resistance of 2500 ohms and R_3 1500 ohms. A filament transformer delivering 7.5 volts, 5 amperes will also be required and it

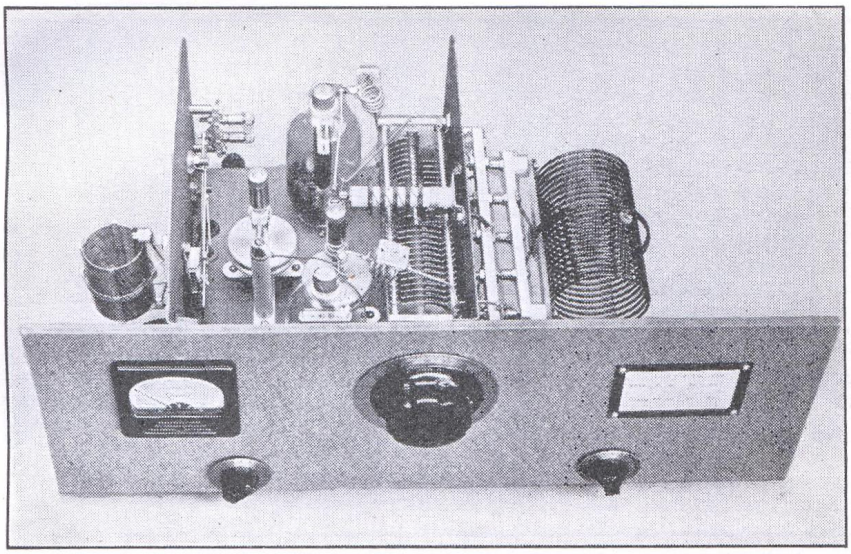

Fig. 1269 — The panel of the 450-watt push-pull amplifier is only seven inches high. The small knob to the left is the grid-circuit tuning control, while the one to the right is for the meter switch.

may be mounted on the bias-supply chassis, if desired. The exciters of Figs. 1232 and 1265 will furnish adequate excitation.

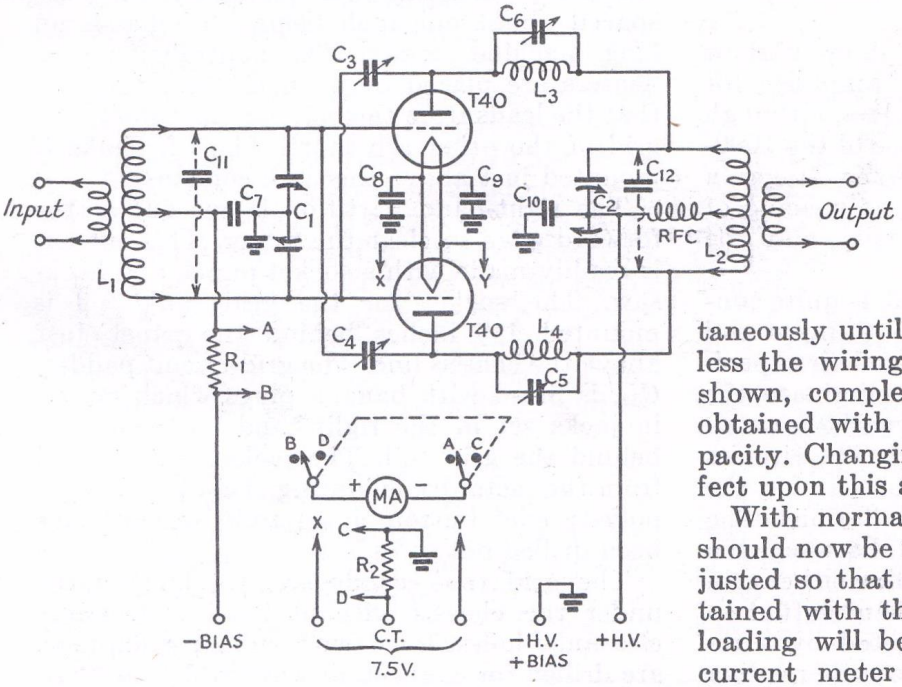

Fig. 1270 — Circuit diagram of the 450-watt push-pull amplifier.

C1 — 100 μμfd. per section, 0.03-in. spacing (Hammarlund HFAD-100-B).

C2 — 100 μμfd. per section, .07-in. spacing (Hammarlund HFBD-100-E).

C3, C4 — Neutralizing condensers (National NC-800).

C5, C6 — 30 μμfd., mica trimmers (National M-30).

C7, C8, C9 — 0.01 μfd.

C10 — 0.001 μfd. mica, 7500 volts test (Aerovox 1653).

C11 — 50-μμfd. air padder for 1.75 Mc., 0.05-in. spacing (Cardwell EO-50-FS).

C12 — 50-μμfd. air padder for 1.75 Mc., 0.125-in. spacing (Cardwell JD-50-OS).

R1 — 25 ohms, 1-watt.

R2 — Meter-multiplier resistance for 5-times multiplication, wound with No. 26 wire.

RFC — 1-mh. r.f choke (National R154U).

MA — Milliammeter, 100-ma. scale.

L1 — B & W JCL series, dimensions as follows: *
1.75 Mc. — 60 turns No. 24, 2⅛-in. long.
3.5 Mc. — 44 turns No. 20, 2⅛-in. long.
7 Mc. — 26 turns No. 16, 2⅛-in. long.
14 Mc. — 14 turns No. 16, 1⅞-in. long (remove 2 turns from B & W coil).
28 Mc. — 6 turns No. 16, 1⅞-in. long (remove 2 turns from B & W coil).

L2 — B & W TCL series, dimensions as follows: **
1.75 Mc. — 28 turns No. 12, 4¾-in. diam., 4¼-in. long.
3.5 Mc. — 26 turns No. 12, 3½-in. diam., 4½-in. long.
7 Mc. — 22 turns No. 12, 2½-in. diam., 4½-in. long.
14 Mc. — 10 turns No. 12, 2½-in. diam., 4¼-in. long, remove one turn from each end.
28 Mc. — 4 turns ⅛-in. copper tubing, 2½-in. diam., 4½-in. long, remove one turn each end.

L3, L4, — 4 turns No. 14, ½-in. diam., ¾-in. long.

* All 1½-in. diameter, 3-turn links.
** All coils fitted with 2-turn links.

Tuning — After the amplifier has been neutralized, a test should be made for parasitic oscillation. Bias should be reduced until the amplifier draws a plate current of about 100 ma. without excitation. With C_1 adjusted to various settings, C_2 should be varied through its range and the plate current watched closely for any abrupt change. Any change will indicate oscillation and the condensers C_5 and C_6 should be adjusted in slight steps simultaneously until the oscillation disappears. Unless the wiring differs appreciably from that shown, complete suppression will usually be obtained with the two condensers at full capacity. Changing of bands should have no effect upon this adjustment.

With normal bias replaced, the amplifier should now be tuned up and the excitation adjusted so that a grid current of 60 ma. is obtained with the amplifier fully loaded. Full loading will be indicated when the cathode-current meter registers 360 ma., which in-

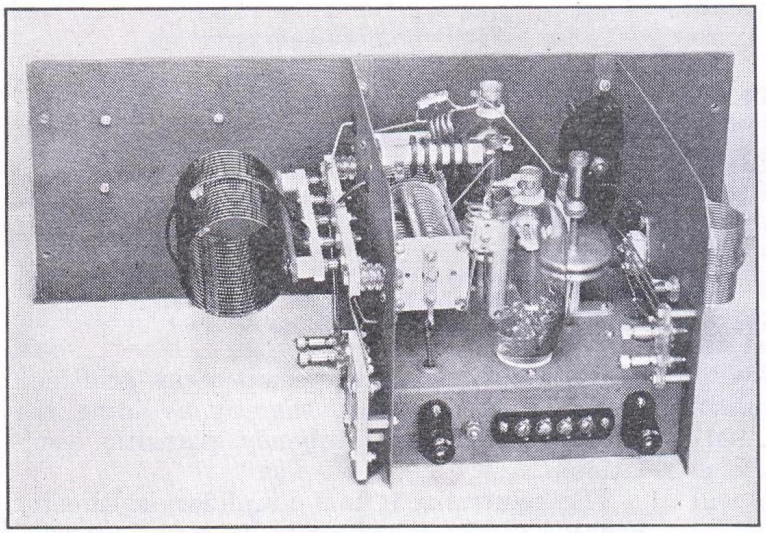

Fig. 1271 — All components of the 450-watt push-pull amplifier are assembled on a chassis 7 inches wide, by 2 inches high, by 9 inches deep. The partitions are standard 6½-inch, by 10-inch interstage shields. Millen safety terminals are used for the high-voltage and bias connections.

cludes the 60-ma. grid current. Under these conditions, the biasing voltage should rise to 150 volts, dropping to about 70 volts without excitation, when the plate current will fall to almost zero.

If the amplifier is to be plate modulated, the plate voltage should be reduced to 1250 and the loading decreased to reduce the plate current to 250 ma. The same bias-supply adjustment will be satisfactory for this type of operation, but excitation may be reduced to give a grid current of 40 ma., bringing the total cathode current to 290 ma. The antenna tuner shown in Fig. 1226 should be adequate, or the pi-section network of Fig. 1273 may be preferred.

Reference should be made to the tube tables for operating conditions for tubes of different characteristics.

• PI-SECTION ANTENNA COUPLER

The photograph of Fig. 1273 shows the constructural details of a pi-section-type antenna coupler. The diagram appears in Fig. 1274. All parts are mounted directly on the panel with flathead machine screws. The condensers are each supported on three ceramic pillars from National type GS-1 stand-off insulators. A ¾-inch 6–32 machine screw is inserted in one end of each pillar and turned tight. The head of the screw is then carefully cut off with a hacksaw and the protruding quarter-inch or so will thread into the mounting holes in the end plate of the condenser. The shaft is cut off about ¼-inch from the frame and is then fitted with a Johnson rigid insulated shaft coupling (No. 252). Since the coupling will extend $^1/_{16}$-inch or so beyond the stand-off insulators, a ¾-inch clearance hole should be cut in the panel for each shaft. Alternatively, $^1/_{16}$-inch thick metal washers could be used between the panel and each pillar to extend the pillar so a clearance hole in the panel would not be required.

Each coil form is supported on 1½-inch cone insulators. The two high-voltage blocking condensers C_3 are also mounted on pillars from GS-1 stand-off insulators. A copper clip on a flexible lead connected permanently to one end of each coil serves to adjust the coil inductance by short-circuiting turns.

Output connections are made to the two terminal insulators at the right, while input connections are made to the terminals of the two voltage blocking condensers. When single-wire output is desired, the output terminal connected to the condenser rotors is grounded and the coil in that side short-circuited completely by the clip and lead.

Under most circumstances, the components specified will work satisfactorily with transmitters of 400 or 500 watts input operating at plate voltages up to 1500. For higher power, the condensers should have greater spacing and the coils should be wound with No. 12 or larger wire. Couplers for lower power may be made

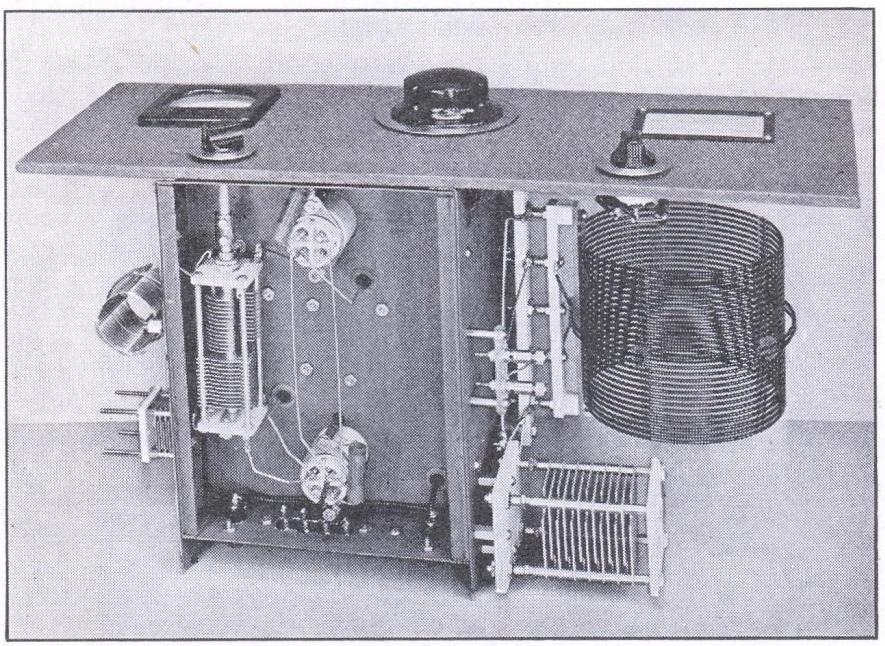

Fig. 1272 — Bottom view of the 450-watt push-pull amplifier, showing the position of the grid tank condenser between the two submounted tube sockets and the two air padding condensers in place for 1.75-Mc. operation.

up in similar fashion with smaller components of equal electrical value.

• COMPLETE 300-TO-400-WATT PLUG-IN-COIL TRANSMITTER OF SMALL DIMENSIONS

The compact exciter and amplifier units of Figs. 1265 and 1269 may be combined as a complete transmitter. Plate and filament supply for the exciter may be obtained from the unit of Fig. 1238. Plate voltage for the amplifier may be obtained either from the unit of Fig. 1225 or that of Fig. 1245. A 7.5-volt, 5-amp. filament transformer may be combined on a 5¼-inch panel with the unit of Fig. 1247 (minus the VR75 branch) which will furnish bias for the amplifier. A 45-volt battery will also be required for biasing the 807.

Suitable antenna tuners, depending upon the power input used to the final amplifier are those of Figs. 1226, 1249 or 1273. The total height of all units, including a 5¼-inch panel for meters for the amplifier, is only 49 inches.

• A THREE-STAGE 100-WATT TRANSMITTER FOR FIVE BANDS

The three-stage transmitter shown in Figs. 1275, 1277 and 1278 is designed to use a single tube of the 1000-volt, 100-ma. class, such as the 1623, 809, HY40, or higher-voltage tubes at reduced ratings in the output stage.

Referring to the circuit diagram of Fig. 1276, a 6L6, operating at a plate voltage of 400, but at reduced input, is used in the Tri-tet oscillator circuit. A potentiometer in the screen circuit provides a means of varying the screen voltage and, ultimately, the excitation to the final amplifier. The HY65 buffer-doubler circuit is capacitively coupled to the oscillator. This second stage makes it possible to obtain excitation for the final amplifier in a third band from a single crystal, operation in the second band being available by doubling frequency in the oscillator itself. Parallel plate feed is used in the second stage to permit series grid feed to the final amplifier, thereby avoiding the probability of low-frequency parasitic oscillations.

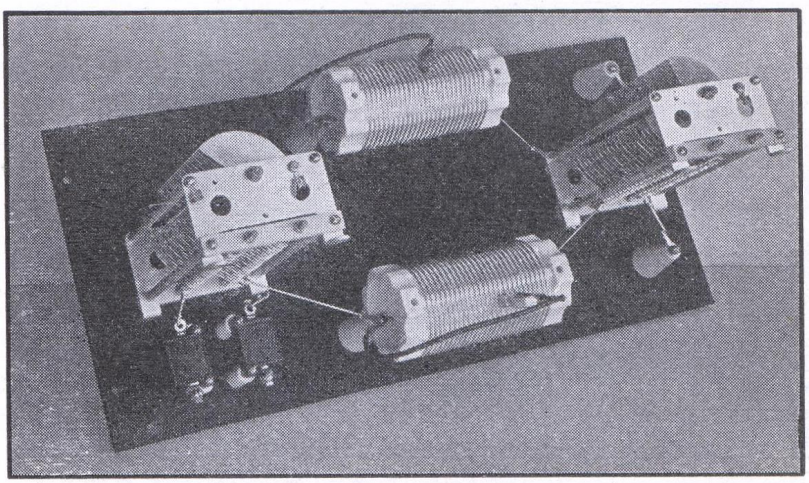

Fig. 1273 — Pi-section type antenna coupler. All parts are mounted on a Presdwood panel 8¾ in. by 19 in.

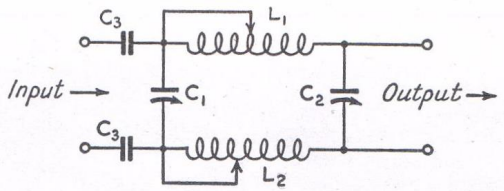

Fig. 1274 — Diagram of pi-section antenna coupler.
C_1–C_2 — 300 $\mu\mu$fds., 0.07-in. spacing (National TMC-300).
L_1–L_2 — 26 turns No. 14, 2½-in. diameter, 3½-in. long (National XR10A form wound full).
C_3 — 0.01-μfd. mica., 5000 volts.

The neutralized final amplifier is directly coupled to the driver stage. C_8 and L_5 form a trap against u.h.f. parasitic oscillation.

The switch, S, shifts the meter to read oscillator cathode current, driver screen current, driver cathode current, final-amplifier grid current and final-amplifier cathode current, the individual filament transformers permitting the independent metering of the cathode currents of the last two stages.

Power Supply — This transmitter is designed to operate from the combination 1000-volt and a 400-volt plate supply pictured in Fig. 1279. Both a fixed biasing voltage of 75 for the HY65 and cut-off bias for the final amplifier may be obtained from the unit shown in Fig. 1247. For the type 1623, the resistances R_2 and R_3 should be 6000 ohms and 7000 ohms, respectively.

Tuning — Coils for the desired output frequency, consistent with the crystal frequency, should be plugged in the various stages, bearing in mind that frequency may be doubled in the plate circuit of the oscillator and again in the second stage, if desired. It should also be remembered that the selection of the cathode coil, L_1, depends upon the crystal frequency and not necessarily the output frequency of the oscillator, the same cathode coil being used both for fundamental and second-harmonic output from the crystal stage. Since much better efficiencies may be obtained in the second stage with the HY65 operating as a straight amplifier, it is advisable always to avoid doubling in this stage whenever conditions permit.

The first two stages should be tested first, with all voltages applied except the plate voltage for the final amplifier. Turning the oscillator to resonance with the key closed, should cause a slight dip in cathode current accompanied by an abrupt rise in the screen

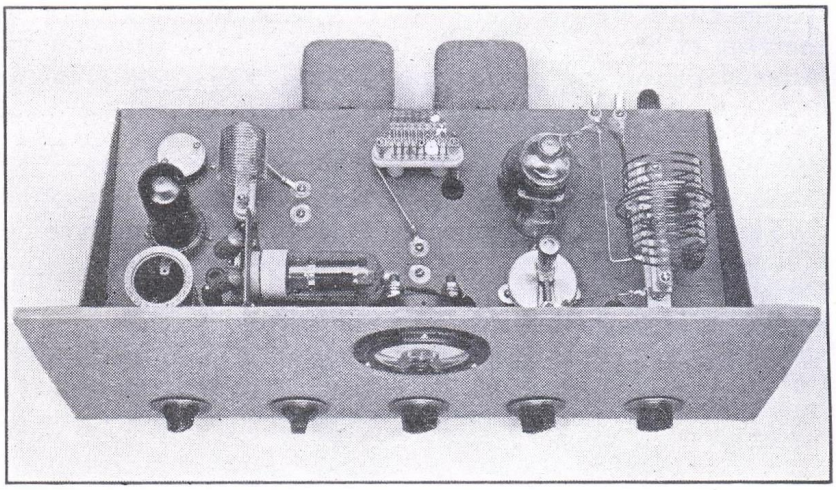

Fig. 1275 — All controls for the 100-watt five-band transmitter are below the chassis level. From left to right they are for the oscillator screen-voltage potentiometer, the oscillator plate tank condenser, the buffer-doubler plate tank condenser, the meter switch and the final-amplifier plate tank condenser. The panel is of standard rack width and 8¾ inches high.

and cathode current of the second stage from zero to maximum. Tuning the HY65 plate circuit to resonance should produce a good dip in cathode current with a simultaneous reading of maximum grid current to the final amplifier.

The amplifier should now be neutralized and tested for parasitic oscillations. The latter is done by shifting the final-amplifier plate-voltage lead to the 400-volt tap and turning off the bias supply. No plate voltage should be applied to the exciter stages. C_4 should then be varied through its entire range for several settings of C_3. If at any point a change in the cathode current of the final amplifier is observed, C_3 should be adjusted to eliminate it. During this process, plate voltage should not be applied for periods sufficiently long to produce appreciable heating of the tube.

Normal operating voltages may now be replaced and the final amplifier tuned up in the usual manner. A plate current of 100 ma. will indicate normal loading of the final amplifier. Plate current will be the difference between grid and cathode currents under operating conditions. With all stages tuned and the amplifier loaded normally, the oscillator cathode current should run between 16 and 30 ma., HY65 screen current between 6 and 11 ma., HY65 cathode current between 45 and 70 ma., HY65 grid voltage between 125 and 260 volts, oscillator screen voltage between 100 and 250 volts, and HY65 screen voltage between 210 and 250 volts, exact values depending upon whether the particular stage in question is operating at the fundamental or doubling frequency. Excitation should be adjusted to keep the amplifier grid current between 20 and 25 ma., when the grid voltage should measure 130 to 150 volts. Power output of 65 to 75 watts should be obtainable on all bands.

The oscillator circuit may be arranged for v.f.o. input as shown in Fig. 1260, if desired.

If the output stage is to be plate modulated, the plate voltage should be reduced to 750. Operating data on other tubes will be found in the tables of Chapter Twenty.

• COMPLETE 100-WATT 5-BAND TRANSMITTER

The transmitter of Fig. 1275 may be combined in a standard rack with other units to form a complete transmitter. Plate voltage for oscillator and driver as well as the final-amplifier stage may be obtained from the duplex supply of Fig. 1279. Bias for both driver and final-amplifier stages may be obtained from the combination unit of Fig. 1247. Fixed bias for the HY65 is taken from the VR75 branch. A suitable antenna tuner is the one shown in Fig. 1216. The larger condensers should be used. The total height of the various units is 29¾ inches, allowing a 7-inch panel for the bias supply.

• A SINGLE-TUBE 500-WATT AMPLIFIER

A single-tube amplifier, which may be operated at inputs up to 500 watts at voltages as high as 3000 is shown in Figs. 1281, 1283 and 1284. The circuit, shown in Fig. 1282 is strictly conventional, with link coupling for both input and output. While a type 100TH is shown in the photographs, other tubes of similar physical size and shape designed to operate at plate voltages of 3000 or less may be used in a similar arrangement.

Construction — The two tank condensers are mounted, one above the other, in the center of the panel by means of isolantite pillars from standoff insulators. Four National type GS-2 are used to support the plate condenser, while three type GS-1 are used for the grid condenser. Insulated couplings and panel bearings must be used in each shaft to insulate the controls. One of high breakdown voltage should be used for the plate condenser and *the panel bearings must be grounded.* The grid tank-coil socket is mounted, with

spacers and a small metal plate as a base, to the rear end plate of C_1. Metal strips, also fastened to the end plate, support the input-link terminal strip. The insulating condenser, C_4, is mounted just to the right of C_2.

In the lower right-hand corner (Fig. 1283) of the panel is fastened a chassis 9½ inches, by 5 inches, by 1½ inch, on which are mounted in line, the filament transformer, the tube and the neutralizing condenser. A chassis of similar size to the left supports the plate tank coil and the output-link terminals. A large feed-through insulator in the rear edge of this chassis serves as the high-voltage terminal.

In wiring, the importance of well-spaced leads carrying high voltage cannot be stressed too greatly. It must be remembered that the arcing distances and break-down capabilities of voltages as high as 3000 are considerably greater than the lower voltages more commonly used by amateurs.

Power supply and tuning — The plate power supply shown in Fig. 1285 may be used with this unit. Bias may be obtained from the unit shown in Fig. 1247. For this purpose, the VR75 branch may be omitted and a single resistance of 5000 ohms should be connected across the output of the pack with the nega-

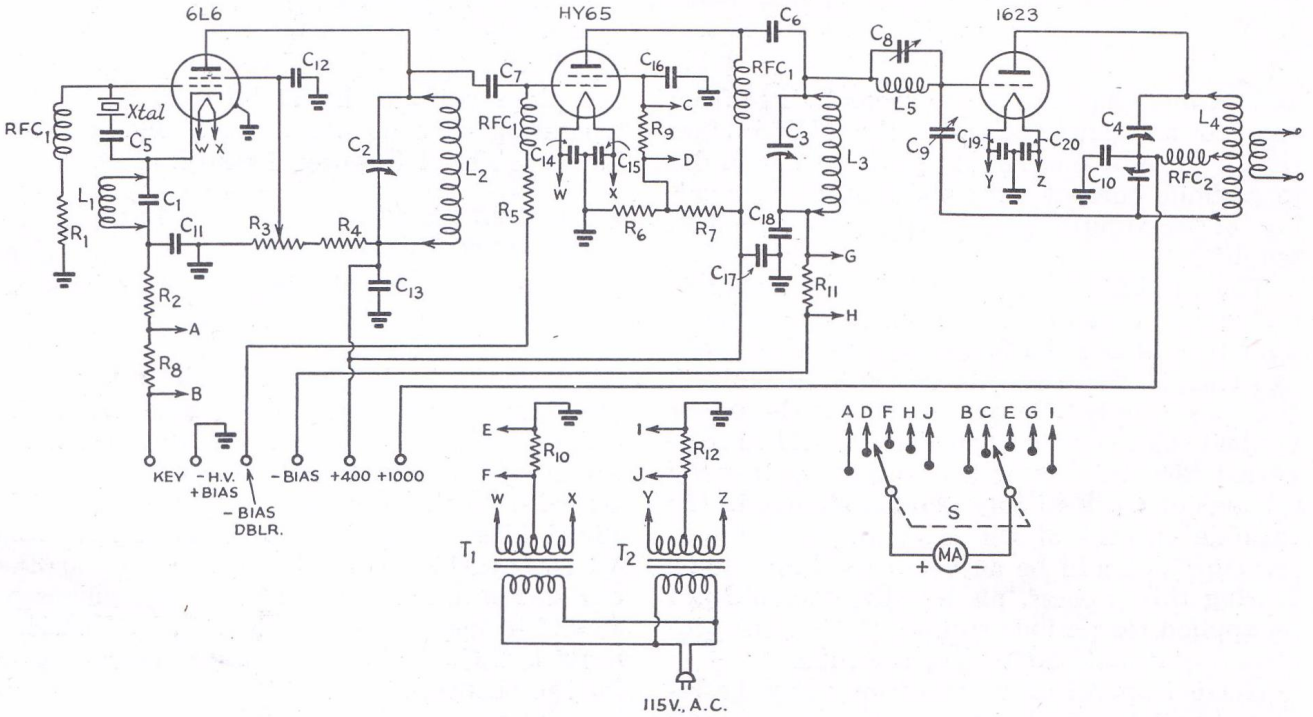

Fig. 1276 — Wiring diagram of the 100-watt 5-band transmitter.

C_1 — 100 μμfd., mica.
C_2, C_3 — 150 μμfd., variable (National ST-150).
C_4 — 100 μμfd. per section, 0.05-in. spacing (Hammarlund HFBD-100-C).
C_5, C_6 — 0.001 μfd., mica.
C_7 — 100 μμfd., mica.
C_8 — 60 μμfd., mica trimmer (two National M-30 in parallel).
C_9 — Neutralizing condenser (National NC-800).
C_{10} — 0.001 μfd., 5000 volts test.
C_{11}, C_{12}, C_{13}, C_{14}, C_{15}, C_{16}, C_{17}, C_{18}, C_{19}, C_{20} — 0.01 μfd.
R_1 — 0.1 meg., ½-watt.
R_2 — 300 ohms, 1-watt.
R_3 — 20,000-ohm, 10-watt potentiometer (Mallory E2OMP).
R_4 — 25,000 ohms, 10-watt.
R_5 — 50,000 ohms, 1-watt.
R_6 — 20,000 ohms, 10-watt.
R_7 — 10,000 ohms, 10-watt.
R_8, R_9, R_{10}, R_{11}, R_{12} — 25 ohms, 1-watt.
RFC_1 — 2.5-mh. r.f. choke.
RFC_2 — 1-mh., 300-ma. r.f. choke (National R-300U).
S — Double-gang, 5-circuit switch (Mallory 3226J).
T_1, T_2 — Filament transformer, 6-3-volt, 3-amp. (UTC S-55).

L_1 — 1.75-Mc. crystals — 32 turns No. 24 d.s.c., close-wound.
3.5-Mc. crystals — 9 turns No. 22, 1-in. long; 100-μμfd. mica condenser mounted in form, connected across winding.
7-Mc. crystals — 6 turns No. 22, ⅝-in. long.
All above wound on Hammarlund 1½-in. diameter forms.

L_2, L_3 — 1.75 Mc. — 56 turns, 1¼-in. diam., 1¾-in. long, 54 μhy. (National AR80, no link).
3.5 Mc. — 28 turns, 1¼-in. diam., 1½-in. long, 15 μhy. (National AR 40, no link).
7 Mc. — 14 turns, 1¼-in. diam., 1¼-in. long, 4.2 μhy. (National AR20, no link).
14 Mc. — 8 turns, 1¼-in. diam., 1½-in. long, 1.25 μhy. (National AR10, no link).
28 Mc. — 4 turns, 1-in. diam., ¾-in. long, 0.5 μhy. (National AR5, turns closed up, no link).

L_4 — 1.75 Mc. — 40 turns No. 18, 2½-in. diam., 2½-in. long, 78 μhy. (B & W 160 BCL). An 80-μμfd. fixed air padder (Cardwell JD-80-OS) is used with this coil. It may be placed in the right-rear corner of the chassis and attached to the outside coil terminals with flexible leads and clips.
3.5 Mc. — 32 turns No. 16, 2½-in. diam., 2¾-in. long, 39 μhy. (B & W 80 BCL).
7 Mc. — 20 turns No. 14, 2-in. diam., 2½-in. long, 12 μhy. (B & W 40 BCL).
14 Mc. — 8 turns No. 14, 2-in. diam., 2-in. long, 2.5 μhy. (B & W 20 BCL). Remove one turn each end.
28 Mc. — 4 turns No. 12, 2-in. diam., 1¾-in. long, 0.7 μhy. (B & W 10 BCL). Remove one turn each end.

L_5 — 5 turns No. 14, ½-in. diam., ½-in. long.

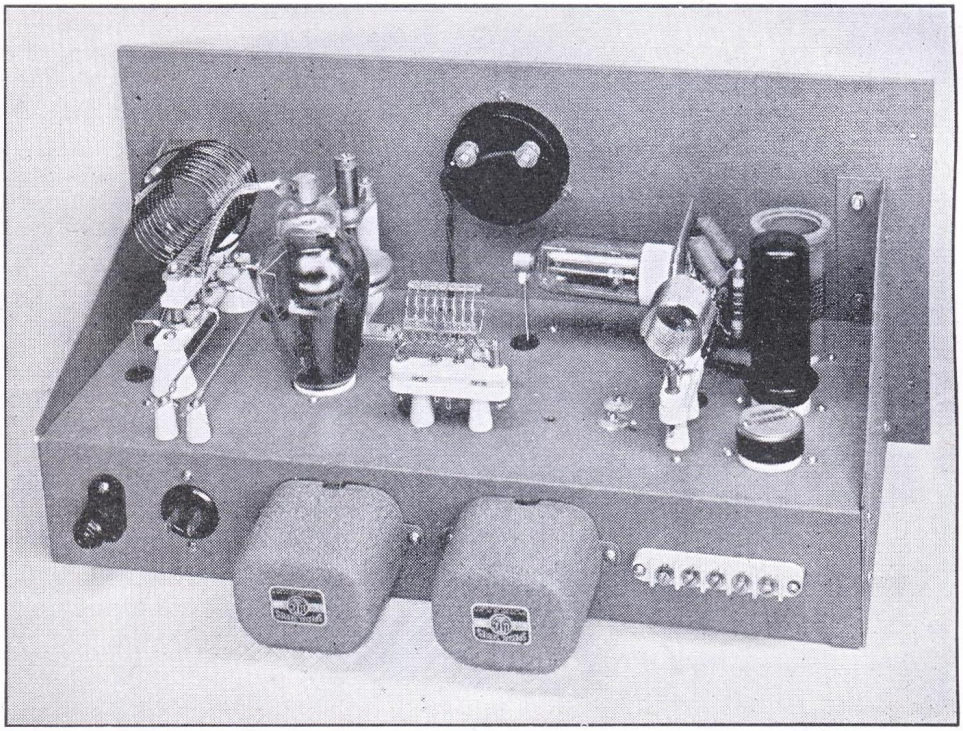

Fig. 1277 — Components on top of the chassis of the 100-watt transmitter are well spaced. The cathode coil, L_1, the 6L6 and the crystal are in line at the right-hand end of the chassis. The HY65 is mounted horizontally on a small panel which also provides mounting space for the filament and screen by-pass condensers, the coupling condenser, C_7, the grid leak, R_5, and the grid choke. L_2 is just to the left of the 6L6 and to the right of C_2 underneath. L_3 is at the center at right angles to L_2 and L_4 and just to the rear of C_3 underneath. The 1623 socket is submounted to lower the plate terminal with the neutralizing condenser immediately in front. RFC_2 is just to the left of L_4. The two filament transformers are mounted on the rear edge.

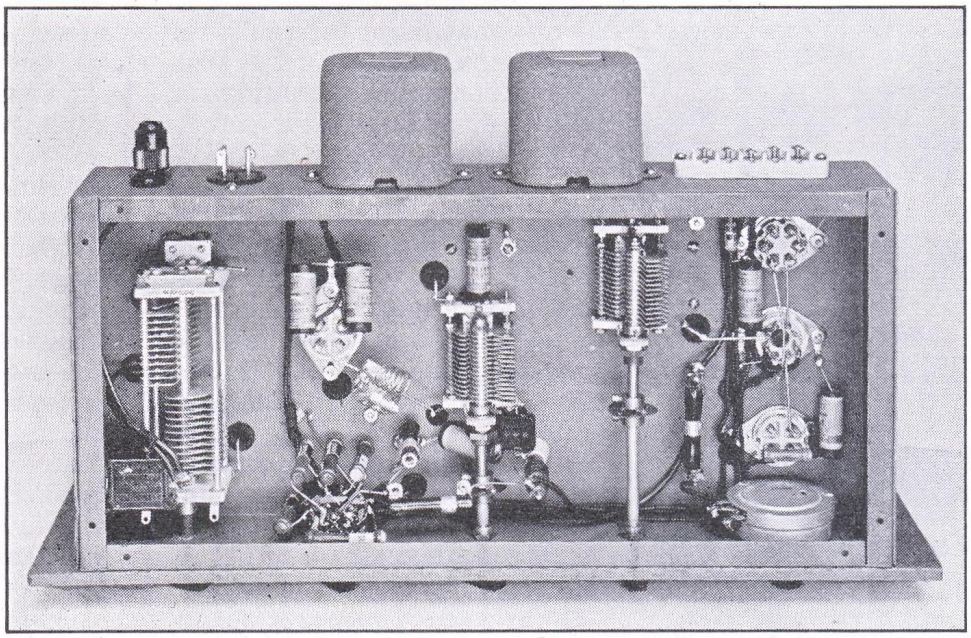

Fig. 1278 — Underneath the 8-inch, by 17-inch, by 3-inch chassis of the 100-watt transmitter the three tank condensers are mounted. C_2 to the right and C_3 at the center are insulated from the chassis with National polystyrene button insulators. C_4 to the left is likewise insulated and spaced from the chassis to bring all shafts at the same level. Leads to the coils immediately above the tank condensers, passing through large clearance holes lined with grommets, are short.

Meter-shunting resistances are soldered directly to the switch terminals. The oscillator screen potentiometer at the right is insulated from the chassis with extruded bakelite washers. The u.h.f. parasitic trap is suspended in the amplifier grid lead to the left of C_3. Insulating couplings and panel-bearing assemblies are required for C_2 and C_3.

tive biasing lead connected to the extreme negative end of this resistance.

The transmitter shown in Fig. 1275 should provide sufficient excitation. Fig. 1282 shows milliammeters connected in grid and plate leads. These meters are not included in the unit. They should be mounted in a separate well-insulated panel protected with a glass cover (see Fig. 1294).

An amplifier operating at high voltage should always be tuned up, after neutralizing, at reduced voltage, which may be obtained by connecting a lamp bulb in series with the primary of the plate transformer. Coupling between the exciter and the amplifier should be adjusted so that the grid current does not exceed 40 to 50 ma. with the amplifier tuned and loaded to the rated plate current of 167 ma. Power output of 225 to 300 watts should be obtainable on all bands at plate voltages from 2000 to 3000.

The tube tables of Chapter Twenty should be consulted for the operation of other tubes.

• PUSH-PULL 1-KW. AMPLIFIER

The push-pull amplifier shown in the photographs of Figs. 1286, 1288 and 1289 is capable of handling a power input of 1000 watts

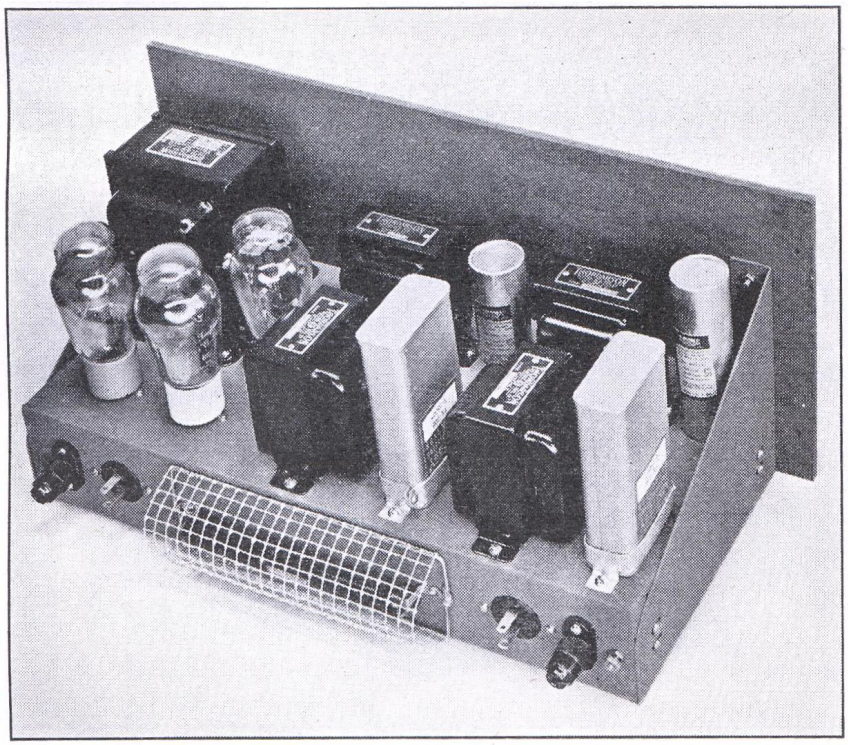

Fig. 1279 — This power supply makes use of a combination transformer and dual filter system delivering 1000 volts at 125 ma. and 400 volts at 150 ma. simultaneously. The circuit diagram is shown in Fig. 1280. The 1000-volt bleeder resistance is mounted on the rear edge of the chassis with a protective guard made of a piece of galvanized fencing material to provide ventilation. Millen safety terminals are used for the two high-voltage terminals. Ceramic sockets should be used for the 866 jrs. The chassis measures 8 inches, by 17 inches, by 3 inches and the standard-rack panel is 8¾ inches high.

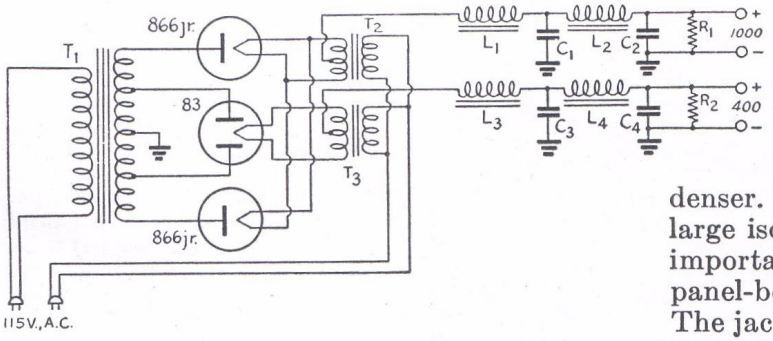

Fig. 1280 — Circuit diagram of the combination 1000- and 400-volt power supply.

C_1, C_2 — 2 μfd., 1000-volt (Mallory TX805).
C_3 — 4 μfd. electrolytic, 600-volt working (C-D 604).
C_4 — 8 μfd. electrolytic, 600-volt working (C-D 608).
L_1, L_3 — 5/20 hy. swinging choke, 150-ma. (Thordarson T19C39).
L_2, L_4 — 12 hy. smoothing choke, 150-ma. (Thordarson T19C46).
R_1 — 20,000 ohms, 75-watt.
R_2 — 20,000 ohms, 25-watt.
T_1 — High-voltage transformer, 1075 and 500 volts r.m.s. each side of center, 125- and 150-ma. simultaneous current rating (Thordarson T19P57).
T_2 — Filament transformer, 2.5 volts, 5-amp. (Thordarson T19F88).
T_3 — Filament transformer, 5 volts, 4-amp. (Thordarson T63F99).

for c.w. operation or 900 watts with plate modulation.

The circuit is shown in Fig. 1287. Plug-in coils with fixed links are used in the grid circuit, while the output-coil mounting is provided with variable-link coupling. L_3C_3 and L_4C_4 form traps against u.h.f. parasitic oscillation. A multi-section plate tank condenser provides a low-minimum capacity for operation at the higher frequencies and a high maximum for the lower frequencies.

Construction — The plate tank condenser is mounted on 1¼-in. cone insulators. The rotor is grounded through a high-voltage fixed condenser at the front end of the condenser. The shaft is cut off and is fitted with a large isolantite flexible shaft coupling. This is important since the rotor is at high voltage. A panel-bearing assembly is fitted in the panel. The jack bar for the plate tank coil is mounted on a pair of angle brackets fastened to the condenser end plates. Two 300-ma. r.f. chokes in parallel are used with one connected between each condenser end plate and the center connections of the coil jack bar. The positive high voltage comes up through the chassis through a feed-through insulator at the rear of the condenser.

The grid tank condenser is mounted on ⅝-in. cone insulators topped with spacers to bring its shaft up level with that of the plate tank condenser. The two condensers are mounted with their shafts 3⅛ in. from the chassis edges. The jack bar for the grid tank coil is mounted on "U"-shaped brackets made from ½-in.-wide brass strip and these, in turn, are mounted on 2-in. cone insulators. The rotor of the condenser is grounded to the chassis at the center. The grid r.f. choke is mounted on a feed-through insulator carrying the biasing voltage up through the chassis. The grid bypass condenser is soldered between the top of the choke and the rotor ground connection.

The two tubes are mounted centrally in respect to the two tank condensers with the neutralizing condensers between the tubes and

the grid tank condenser. The sockets for the tubes are sub-mounted beneath the chassis on 5/8-in. spacers to bring the plate terminals lower. The parasitic-trap condensers and coils are self-supporting and are fastened to the heat-radiating plate connectors.

Underneath the filament transformer is mounted and the filament by-pass condensers are wired directly at the sockets. Millen safety terminals are provided for the positive-high-voltage and negative-bias terminals. A male plug is set in the rear edge of the chassis for the 110-volt connection to the filament transformer.

Power supply — A suitable plate-supply unit for this amplifier is shown in Fig. 1285. For bias, the unit shown in Fig. 1248 is suggested. The branch including the VR75 may be omitted and resistance values for R_2 and R_3 should be approximately 2000 and 2500 ohms, respectively. The transmitter shown in Fig. 1275 will furnish more than adequate excitation.

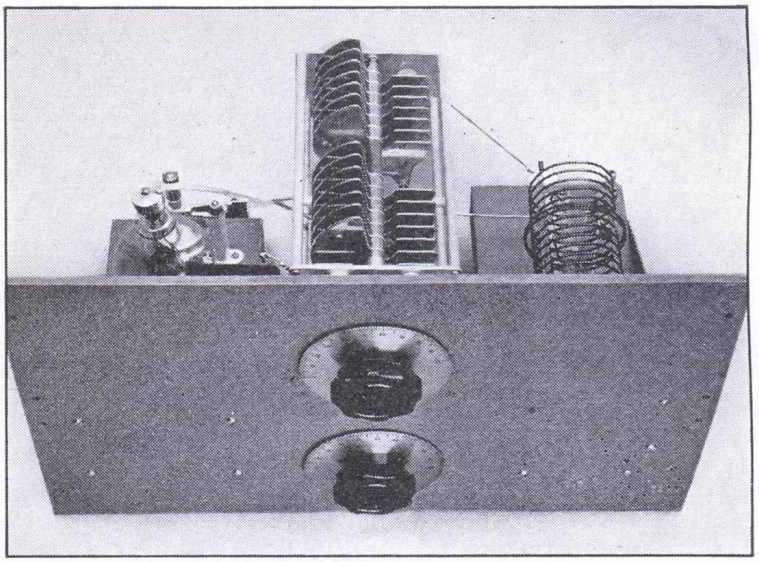

Fig. 1281 — A single-tube amplifier for high voltages and inputs up to 500 watts. The panel is 12¼ inches high.

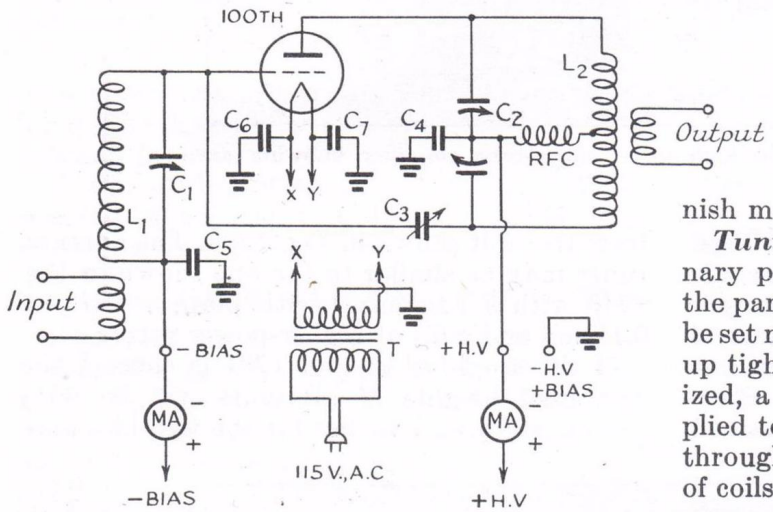

Fig. 1282 — Circuit diagram of the high-power single-tube amplifier.

C_1 — 250 μμfd. variable, 0.047-in. spacing (National TMK-250).
C_2 — 100 μμfd. per section, 0.171-in. spacing (National TMA-100-DA).
C_3 — Neutralizing condenser (National NC-800).
C_4 — High-voltage insulating condenser, 0.001 μfd., 12,500-volt (Cornell-Dubilier 21A-86).
C_5, C_6, C_7 — 0.01 μfd.
RFC — 1-mh. r.f. choke, 300-ma. (National R300U mounted on GS-1 insulator).
T — Filament transformer — 5 volts, 8-amp. (Thordarson T-19F84).
L_1 — 3.5 Mc. — 26 turns No. 16, 1½-in. diam., 2⅛-in. long, 3-turn link (B & W JCL-40).
7 Mc. — 16 turns No. 16, 1½-in. diam., 1⅞-in. long, 3-turn link (B & W JCL-20).
14 Mc. — 8 turns No. 16, 1½-in. diam., 1⅞-in. long, 3-turn link (B & W JCL-10).
28 Mc. — 6 turns No. 16, 1½-in. diam., 1½-in. long, 2-turn link (B & W JCL-10, 1 turn removed from each end).
L_2 — 3.5 Mc. — 26 turns No. 12, 3½-in. diam., 4½-in. long, 2-turn link (B & W TCL-80).
7 Mc. — 22 turns No. 12, 2½-in. diam., 4½-in. long, 2-turn link (B & W TCL-40).
14 Mc. — 12 turns No. 12, 2½-in. diam., 4¼-in. long, 2-turn link (B & W TCL-20).
28 Mc. — 6 turns ⅛-in. copper tubing, 2½-in. diam., 4½-in. long, 2-turn link (B & W TCL-10).

Tuning — The only departure from ordinary procedure in tuning is that of adjusting the parasitic traps. The trap condensers should be set near maximum capacity, but not screwed up tight. After the amplifier has been neutralized, a bias of about 22½ volts should be applied to the grid and the plate voltage applied through a 2500-ohm resistance. With any pair of coils plugged in, the plate current should not vary with any setting of grid or plate condensers. If the plate current changes suddenly at any point, the trap condensers should be adjusted equally until the change disappears. The trap condensers should be set as near maximum capacity as possible consistent with parasitic suppression. If the r.f. wiring has been followed carefully, the initial adjustment of the traps described above should be sufficient.

After the above adjustment is complete, excitation may be applied and the amplifier loaded. The high-capacity sections of the plate condenser are required only for the 3.5-Mc. band.

Grid current should run 100 ma. on all bands and the amplifier may be loaded until the plate current increases to 500 ma. when the output at 2000 volts should be approximately 750 watts.

• COMPLETE HIGH-POWER TRANSMITTERS

The 100-watt transmitter of Fig. 1275 may be used as a driver for either of the high-power amplifiers shown in Figs. 1281 and 1286. In

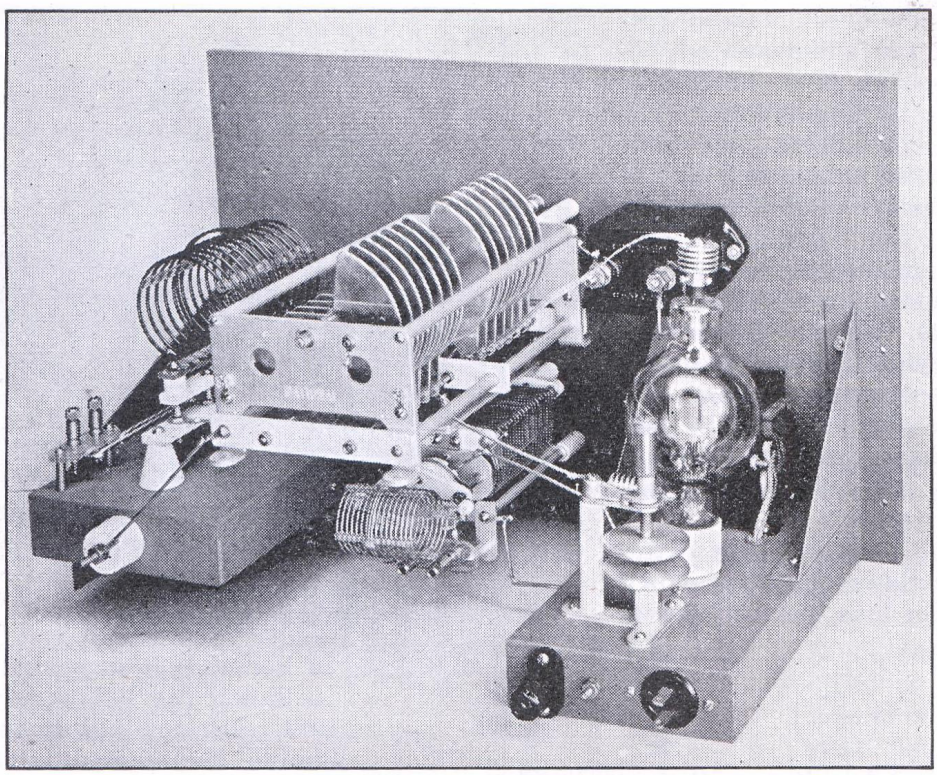

Fig. 1283 — Rear view of the high-power single-tube amplifier, showing arrangement of components.

addition to the power-supply units of Figs. 1247 and 1279 required for the exciter, an additional bias supply for the high-power amplifier will be necessary. With either amplifier, a second unit similar to that of Fig. 1247, minus the VR-tube branch will be satisfactory. Plate voltage for either amplifier may be obtained from the unit shown in Fig. 1285. The antenna tuner may be similar to the one shown in Fig. 1249 with a condenser with plate spacing of 0.1 inch and coils of higher-power rating.

If the amplifier of Fig. 1281 is chosen, the combined heights of all units will be 66½ inches, allowing 7 inches for the two bias sup-

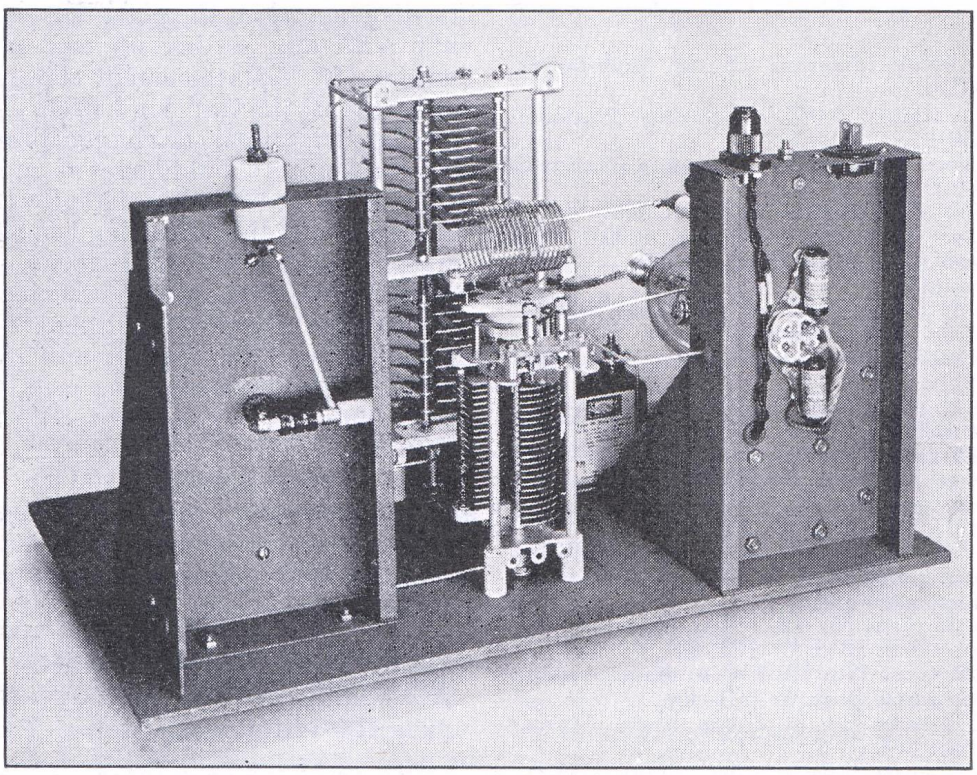

Fig. 1284 — Bottom view of the 500-watt single-tube amplifier.

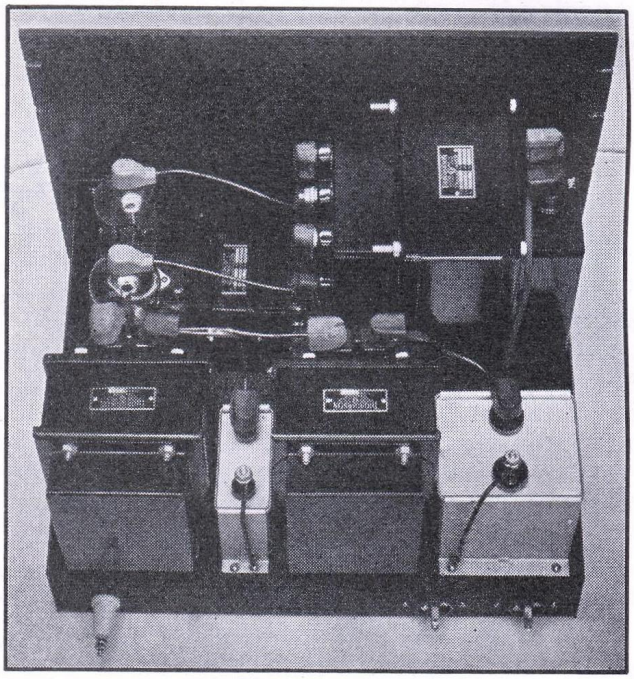

Fig. 1285 —This unit delivers 2025 and 2480 volts at full-load current of 450 ma. with a ripple of 0.5% and regulation of 19%. Voltages are selected by taps on the secondary. All exposed high-voltage terminals are covered with Sprague rubber safety caps and the tube plate terminals with moulded caps. The rectifier tubes are placed away from the plate transformer to avoid induction troubles. The panel is 14 inches, by 19 inches and the chassis 13 inches, by 17 inches, by 2 inches. The exposed high-voltage terminal should be covered with a rubber-tubing sleeve.

The circuit is the same as that shown in Fig. 1246 with values as follows:

C_1 — 1 μfd., 2500 volts (G.E. Pyranol).
C_2 — 4 μfd., 2500 volts (G.E. Pyranol).
L_1 — Input choke, 5–20 hy., 500 ma., 75 ohms (Thordarson T19C38).
L_2 — Smoothing choke, 12 hy., 500 ma., 75 ohms (Thordarson T19C45).
R — 50,000 ohms, 200 watts.
Tr_1 — 3000–2450 volts, r.m.s. each side of center, 500 ma. d.c. (Thordarson T19P68).
Tr_2 — 2.5 volts, 10 amp., 10,000-volt insulation (Thordarson T64F33).

Note: Regulation may be improved by the use of a lower bleeder resistance at some sacrifice in maximum load current.

plies combined, 5¼ inches for a meter panel for the final amplifier and 10½ inches for the antenna tuner.

If the push-pull amplifier of Fig. 1286 is selected, the total height will be 1¾ inch greater or 68¼ inches.

• A PRACTICAL VACUUM-TUBE KEYER

Fig. 1290 shows a practical vacuum-tube keyer. The circuit diagram is shown in Fig. 1291. T_1, the rectifier, C_1 and R_1 form the power supply section for producing the blocking voltage necessary for cutting off the keyer tubes. With only R_2 in the circuit and Sw_2 in the open position, there will be no lag. As Sw_2 is turned to introduce more capacity in the circuit, keying characteristics are "softened" at both make and break. Adding resistance, by turning Sw_1 to the right affects the "break" only. The use of high resistances and small capacities results in small demand on the power supply and makes the key absolutely safe to handle.

As many 45s in parallel as desired may be added. The voltage drop through a single tube runs from 90 volts at 50 ma. to 52 volts at 20 ma. Tubes in parallel will reduce the drop in proportion to the number of tubes used in parallel. If rated voltage is important in the operation of the keyed circuit, the drop through the keyer tubes must be taken into consideration and the transmitter voltage boosted to compensate for the drop.

When connecting the output terminals of the keyer to the circuit to be keyed, care should be used to connect the grounded output terminal to the negative side of the keyed circuit.

• RACK CONSTRUCTION

Most of the units described in the constructional chapters of this handbook are designed for standard rack mounting and, therefore, the assembly of a selected group of units to form a complete transmitter is a relatively simple matter. While standard metal racks are avail-

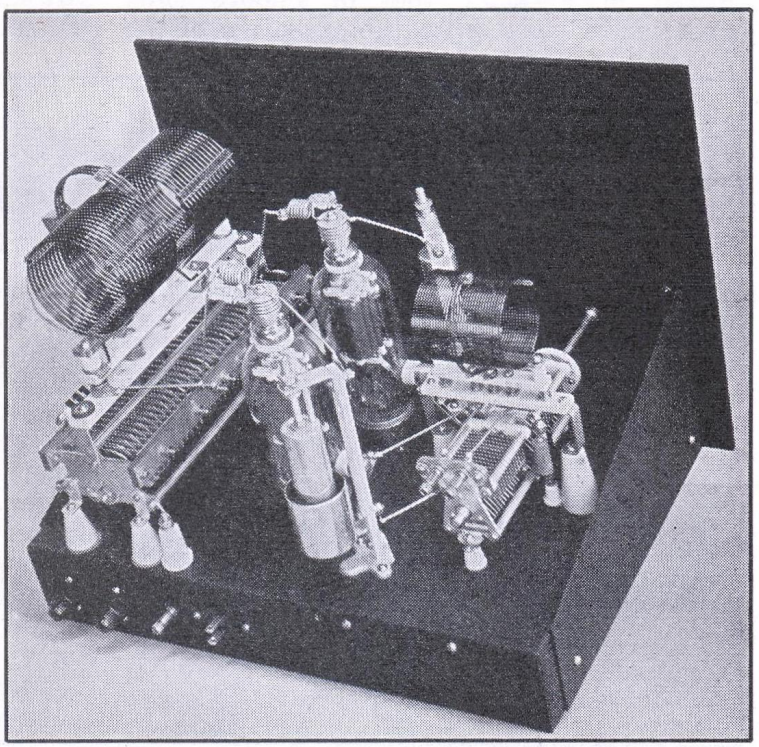

Fig. 1288 — Rear view of the 1-kw. amplifier showing wiring and placement of parts.

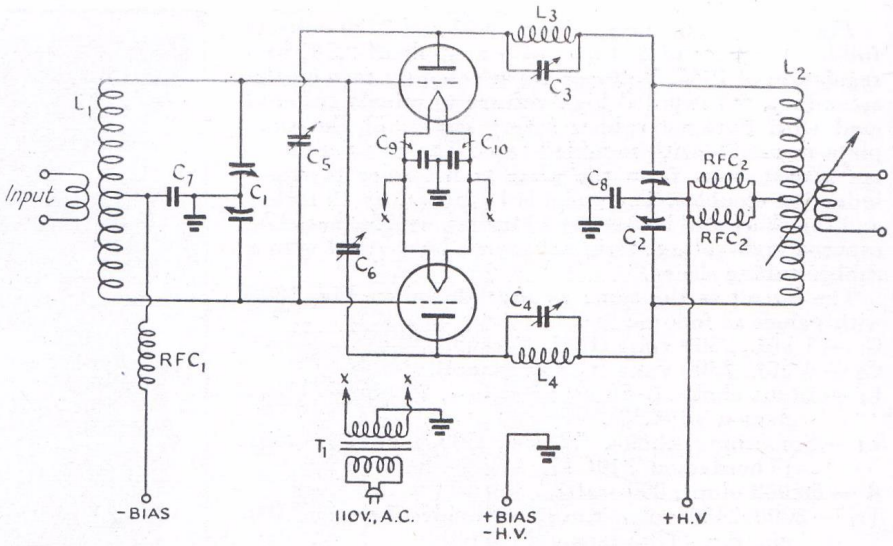

Fig. 1287 — Circuit diagram for the 1-kw. push-pull amplifier.

C_1 — 150 $\mu\mu$fd. per section, 0.05-in. spacing (Johnson 150FD20).

C_2 — Multi-section, max. capacity 228 $\mu\mu$fd. per section, 0.84-in. spacing (Cardwell XE-160-70-XQ).

C_3, C_4 — 30-$\mu\mu$fd. mica trimmer condensers with isolantite insulation (Millen 28030).

C_5, C_6 — Neutralizing condensers (Johnson N250).

C_7 — 0.01 μfd. paper, 600-volt.

C_8 — 0.001 μfd., mica, 10,000-volt (Aerovox 1624).

C_9, C_{10} — 0.01 μfd. paper.

RFC_1 — 2.5-mh. r.f. choke.

RFC_2 — 1-mh., 300-ma. r.f. choke (National R-300).

T_1 — 10-volt, 10-amp. filament transformer (Thordarson T19F87).

L_1 — 1.75 Mc. — 42 turns No. 14, 3 in. long, 3½ in. diam. (110 μhy.)
3.5 Mc. — 32 turns No. 16, 2¾ in. long, 2½ in. diam. (40 μhy.) (B & W 80BL).
7 Mc. — 20 turns No. 14, 2½ in. long, 2 in. diam. (12 μhy.) (B & W 40BL).
14 Mc. — 10 turns No. 14, 2½ in. long, 2 in. diam. (3 μhy.) (B & W 20BL).
28 Mc. — 6 turns No. 12, 2½ in. long, 2 in. diam. (1 μhy.) (B & W 10BL).

L_2 — 1.75 Mc. — 48 turns No. 14, 6¾ in. long, 3½ in. diam. (90 μhy.) (B & W 160HDVL).
3.5 Mc. — 32 turns No. 10, 6¾ in. long, 3½ in diam. (40 μhy.) (B & W 80HDVL).
7 Mc. — 20 turns No. 8, 6¾ in. long, 3½ in. diam. (15 μhy.) (B & W 40HDVL).
14 Mc. — 8 turns No. 8, 4¾ in. long, 3½ in. diam. (3 μhy.) (B & W 20HDVL with one turn removed from each end.
28 Mc. — 4 turns 3/16-in. copper tubing or No. 4 wire, 5¼ in. long, 2⅜ in. inside diam. (0.8 μhy.) (B & W 10HDVL with one turn removed from each end).

L_3, L_4 — 6 turns No. 12, ½-in. inside diam., ¾ in. long.

able on the market, many amateurs prefer to build their own from less expensive wood stock. With a little care, an excellent substitute can be made.

The plan of a rack of standard dimensions is shown in Fig. 1292. The rack is constructed entirely of 1" × 2" stock of smooth pine, spruce or redwood, with the exception of the trimming strips, *M*, *N*, *O* and *P*. Since the actual size of standard 1" × 2" stock runs appreciably below these dimensions, a much sturdier job will result if pieces are obtained cut to the full dimensions.

The two main vertical supporting members are each comprised of two pieces (*A* and *B*, and *I* and *J*) fastened together at right angles. Each pair of pieces is fastened together by No. 8 flat head screws, counter-sunk.

Before fastening these pairs together, pieces *A* and *J* should be made exactly the same length and drilled in the proper places for the mounting screws, using a No. 30 drill. The length of pieces *A*, *J*, *B* and *I* should equal the total height of all panels required for the transmitter plus *twice* the sum of the thickness and width of the material used. If the dimensions of the stock are exactly 1" × 2", then 6" must be added to the sum of the panel heights. An inspection of the top and bottom of the rack in the drawing will reveal the reason for this. The first mounting hole should come at a distance of ¼" plus the sum of the thickness and width of the material from either end of pieces *A* and *J*. This distance will be 3¼" for stock exactly 1" × 2". The second hole will come 1¼"

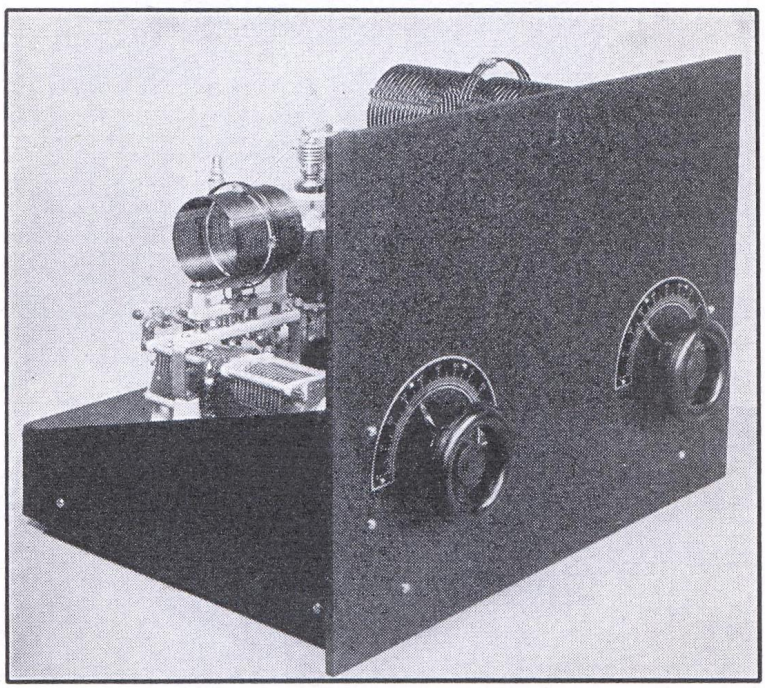

Fig. 1286 — The panel for the 1-kw. push-pull amplifier is 14 inches high by 19 inches wide.

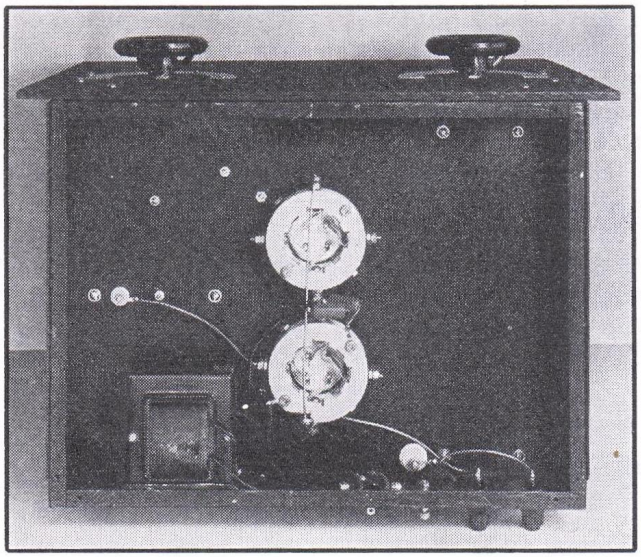

Fig. 1289 — The tube sockets of the 1-kw. amplifier are sub-mounted. The filament transformer is mounted near the sockets. The chassis is 13 inches by 17 inches.

from the first, the third ½" from the second, the fourth 1¼" from the third and so on, alternating spacings between ½" and 1¼" (see detail drawing D, Fig. 1292). All holes should be placed ⅜" from the inside edges of the vertical members.

The two vertical members are fastened together by cross-member *K* at the top and *L* at the bottom. These should be of such a length that the inside edges of *A* and *J* are exactly 17½" apart at all points. This will bring the lines of mounting holes 18¼" center to center. Extending back from the bottoms of the vertical members are pieces *G* and *D* connected together by cross-members *L*, *Q* and *E*, forming the base. The length of the pieces *D* and *G* will depend upon space requirements of the largest power supply unit which will rest upon it. The vertical members are braced against the base by diagonal members *C* and *H*. Rear support for heavy units placed above the base may be

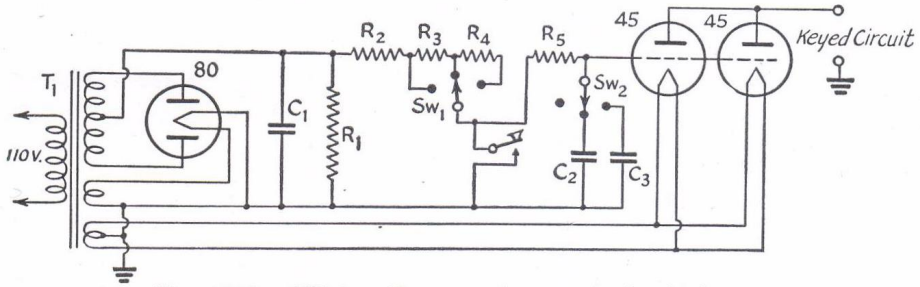

Fig. 1291 — Wiring diagram of a practical tube keyer.

C_1 — 2 μfd., 600-volt paper (don't use electrolytic).
C_2 — 0.003-μfd. mica (0.001 and 0.002 in parallel if necessary).
C_3 — 0.005-μfd. mica.
R_1 — 0.25 megohm.
R_2 — 50,000 ohms, 10-watt.
R_3, R_4 — 5 megohms.
R_5 — 0.5 megohm.
All resistors 1-watt unless otherwise mentioned.
Sw_1, Sw_2 — 3-position 1-circuit rotary switch.
T_1 — 325 volts each side c.t., with 5-volt and 2.5-volt windings (Thordarson T13RO1).

If desired, more degrees of lag may be obtained by using rotary switches with more points and more resistors and condensers. Suggested values of capacity, in addition to the above (C_2 and C_3), are 0.001 and 0.002 μfd. From R_2, resistors would run 2 megohms, 2 megohms, 3 megohms and 5 megohms.

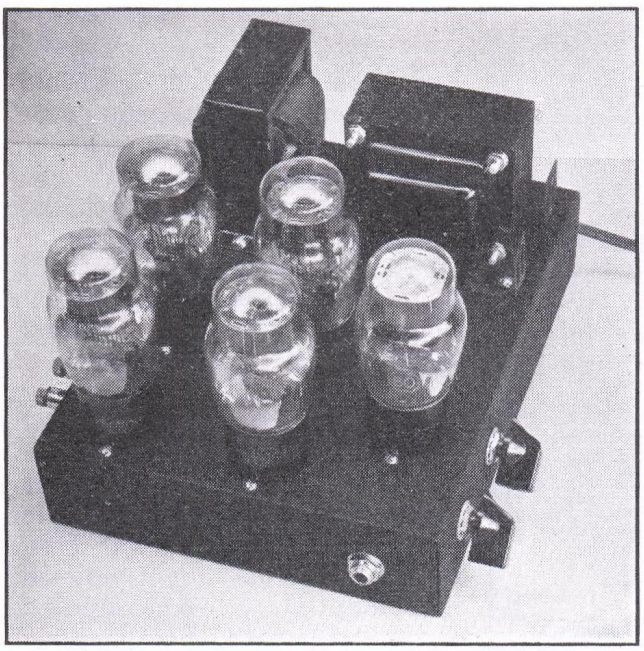

Fig. 1290 — This vacuum-tube keyer is built up on a 7-inch by 9-inch chassis. There is space for four or more keyer tubes and the power-supply rectifier. The resistances and condensers which produce the lag are mounted underneath, controlled by the knobs at the right. The jack is for the key, while the terminals at the left are for the keyed circuit.

provided by mounting angles on the insides of *C* and *H*, or by connecting them with cross-members at suitable heights as shown at *F*.

To finish off the front of the rack pieces of ¼" oak strip (*M*, *N*, *O*, *P*) are fastened around the edges with small-head finishing nails. The heads are set below the surface and the holes plugged with putty or plastic wood. They should be of such a width that the top and bottom edges of *O* and *P* respectively should be ¼" from the first mounting holes and the distance between the inside edges of the vertical strips, *N* and *P*, 19$\frac{1}{16}$".

To prevent the screw holes from wearing out when panels are changed frequently, ½" × $\frac{1}{16}$" or $\frac{1}{32}$" thick iron or brass strip may be

used to back up the vertical members of the frame.

The outside surfaces should be sandpapered thoroughly and given one or two coats of flat black finish, sandpapering between coats. A finishing surface of two coats of glossy black "Duco" is then applied, again sandpapering between coats. It is important to allow each coat to dry thoroughly before applying the next, or sandpapering.

Since the combined weights of power supplies, modulator equipment, etc., may total to a surprising figure, the rack should be provided with rollers or wheels so that it may be moved about when necessary after the transmitter has been assembled. For this purpose, ball bearing roller-skate wheels are excellent.

Standard chassis are 17 inches wide. Standard panels are 19 inches wide and multiples of 1¾ inches high. Panel mounting holes start with the first one at ¼-inch from the edge of the panel, the second 1¼ inches from the first, the third ½ inch from the second, the fourth 1¼ inches from the third and the distances between holes from there on alternate between ½ inch and 1¼ inches. (See detail D, Fig. 1292.) In a panel higher than two or three rack units (1¾ in.), it is common practice to drill only sufficient holes to provide a secure mounting. All panel holes should come ⅜ inch from each edge.

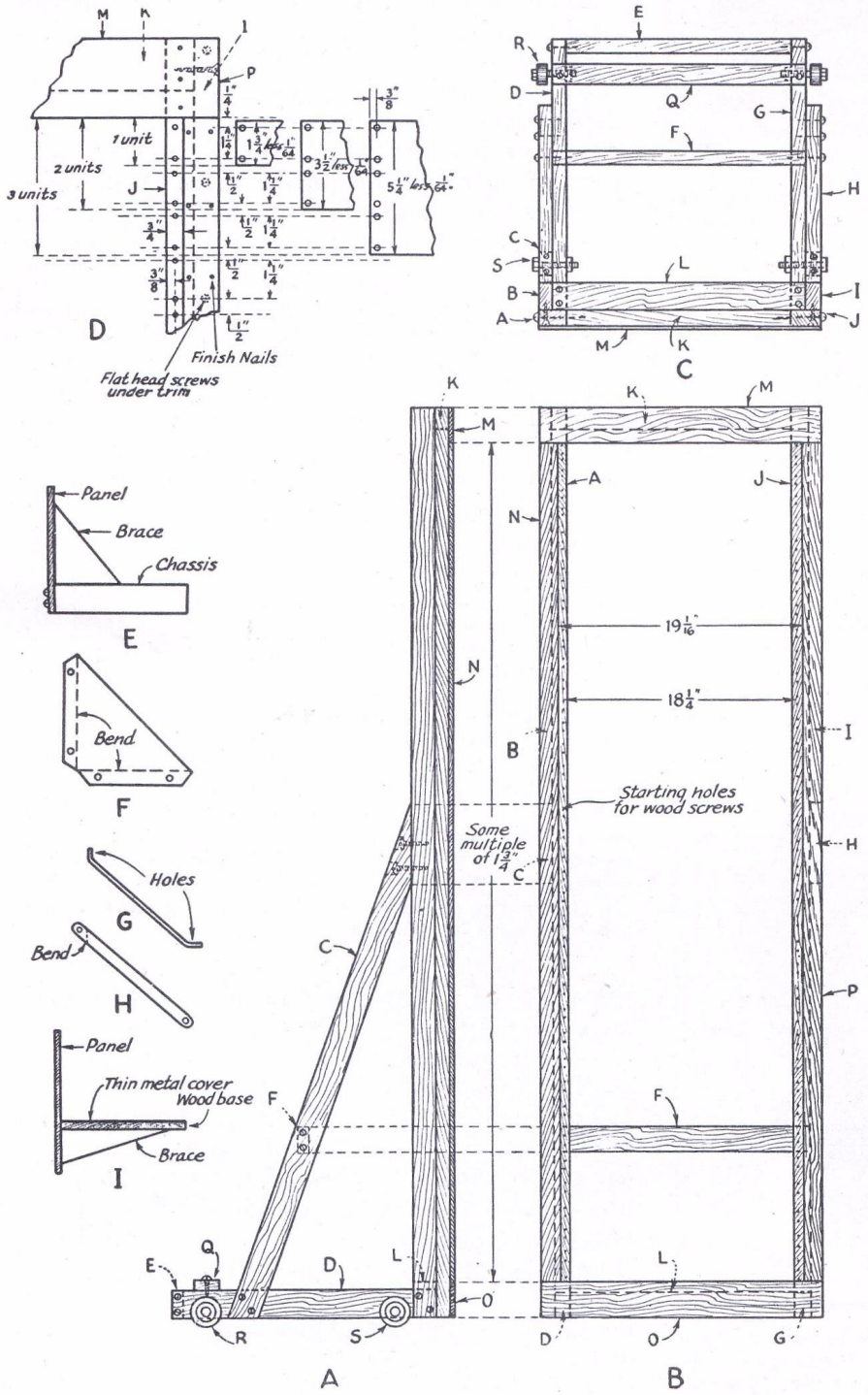

Fig. 1292 — The standard rack. A — Side view, B — Front view, C — Top view, D — Upper right hand corner detail, E — Panel and chassis assembly, F, G, H — Various types of panel brackets, I — A substitute for the metal chassis.

• METERING

Various methods of metering are shown in Fig. 1293. *A* shows the meters placed in the high-voltage plate and bias circuits. M_1 and M_2 are for plate current and M_3 and M_4 for grid current. When more than one stage operates from the same plate-voltage or bias-voltage supply, each stage may be metered as shown. If this system of metering is used, the meters should be mounted so that the meter dials are not accessible to accidental contact with the adjusting screw. One method of mounting is shown in Fig. 1294 where the meters are mounted behind a glass panel.

When plate milliammeters are to be mounted on metal panels, care must be taken to see that the insulation is sufficient to withstand the plate voltage. Metal case instruments should not be mounted on a grounded metal panel if the difference in potential between the meter and panel is more than 300 volts; instruments with bakelite cases can be used under similar circumstances at voltages up to

1000. At higher voltages an insulating panel should be used.

The placing of meters at high-voltage points in the circuit may be overcome by the use of

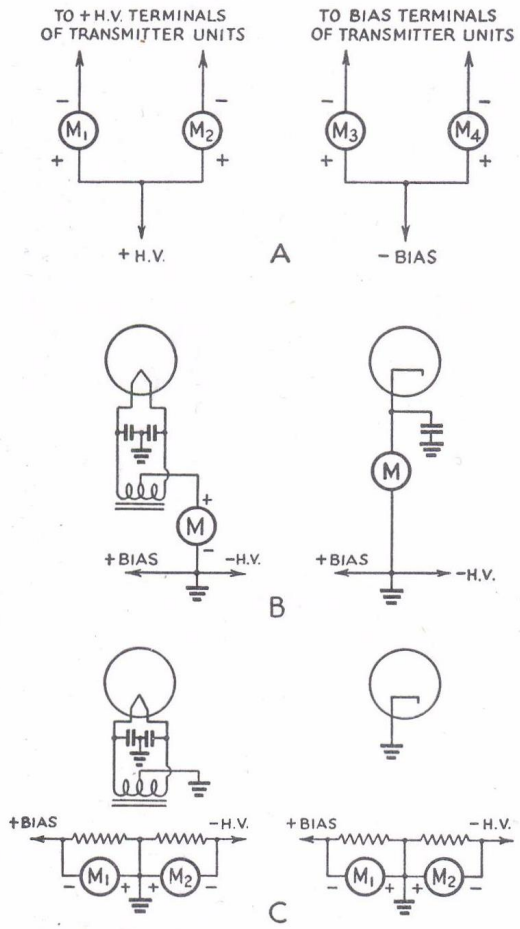

Fig. 1293 — Various methods of metering grid and plate currents. A — High-voltage metering. B — Cathode metering. C — Shunt metering.

connections shown in Fig. 1293-B and -C. The disadvantage of the arrangements of B is that the meter reads total cathode current and grid and plate currents cannot be metered individually. This disadvantage is overcome in *C* where the meters are connected across low resistances in grid and plate return circuits. M_1 reads grid current and M_2 plate current. The resistance should be of a value of not less

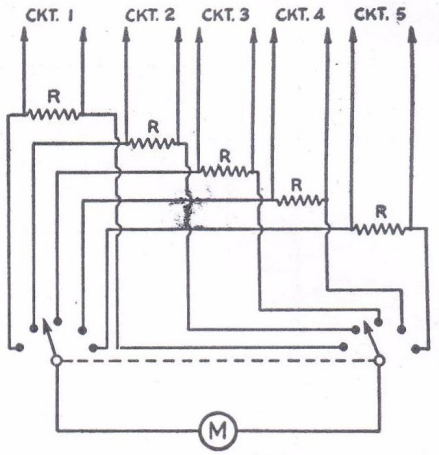

Fig. 1295 — Method of switching a milliammeter to various circuits with a two-gang switch. The control shaft should be well insulated from the contacts and grounded. The resistances should be ten to twenty times the resistance of the meter; 20 ohms will usually be satisfactory.

than 10 to 20 times the resistance of the meter and should be of sufficient power rating so that there will be no possibility of resistor burn-out. If desired, the resistance values may be adjusted to form a multiplier scale for the meter (see Chapter Eighteen). The same principle is used in the meter switching system of Fig. 1295.

Meters may also be shifted from one stage to another by a plug and jack system, but this system should not be used unless it is possible to ground the frame of the jack or unless a suitable guard is provided around the meter jacks to make personal contact with high voltages impossible in normal use of the plug.

• CONTROL CIRCUITS

Proper arrangement of controls is important if maximum convenience in operation is desired. If the transmitter is to be of fairly high power, it is desirable to provide a special service line directly from the meter board to the operating room. This line should be run in conduit or BX cable with conductors of ample size to carry the load without undue voltage drop. The line should be terminated with an enclosed entrance switch properly fused.

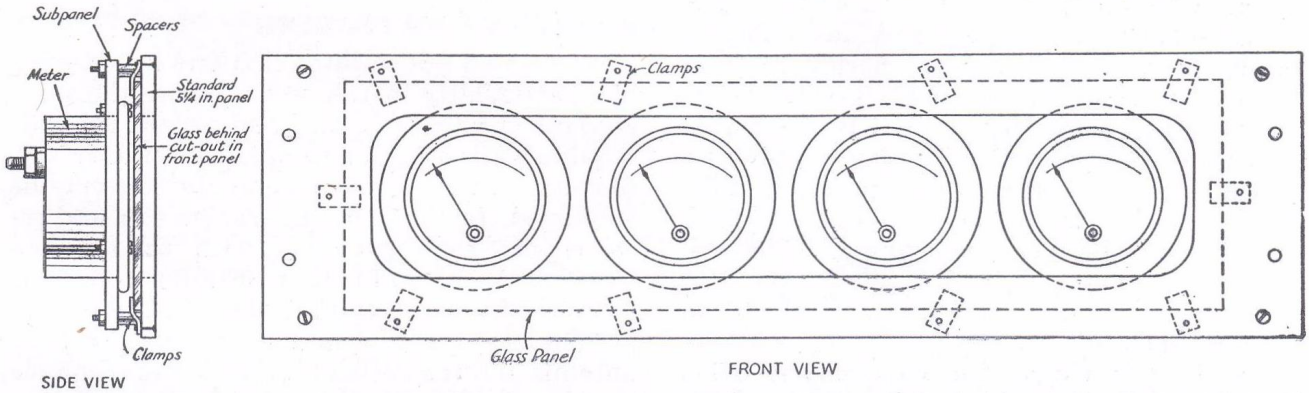

Fig. 1294 — Safety panel for meters. The meters are mounted in the usual manner on an insulating sub-panel spaced back of a glass-covered opening in the front panel. The glass is fastened in place with metal clamps or tabs fastened to the front panel with small screws or pins. The front panel is of standard size 19 in. by 5¼ in.

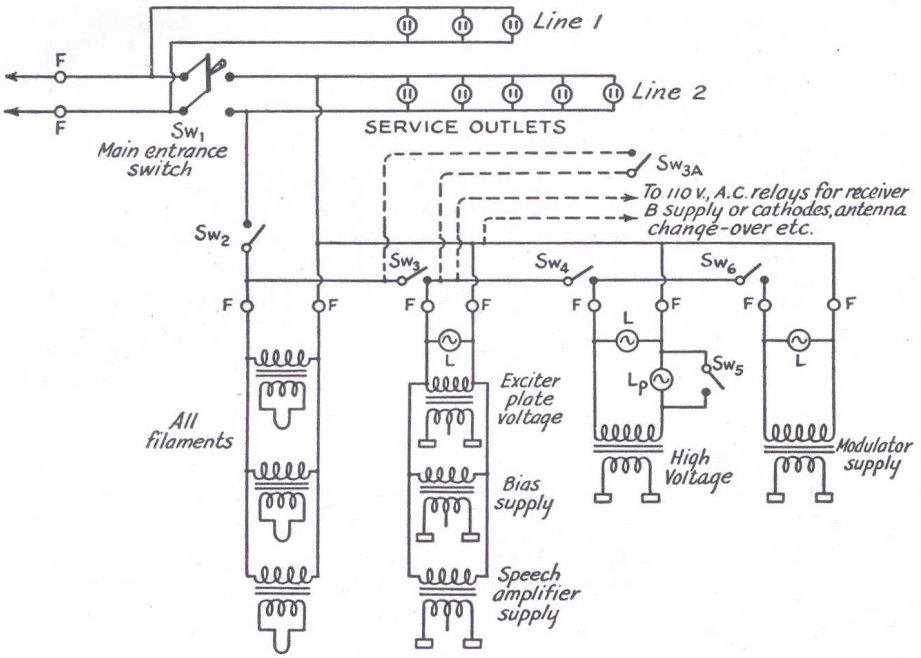

Fig. 1296 — Station control system. With all switches except SW_3 closed, SW_3 serves as the main control switch. SW_1 — Enclosed entrance switch. SW_2 — Filament switch. SW_3 — Low plate-voltage and main control switch. (See text.) SW_4 — High plate-voltage switch. SW_5 — Low-power and tune-up switch. (See text.) SW_1 — Modulator plate-voltage switch. F — Fuse. L — Warning light. L — Voltage-reducing lamp. (See text.)

Fig. 1296 shows the wiring diagram of a simple control system. It will be noticed that, because the control switches are connected in series, none of the high-voltage supplies may be turned on until the filament switch has been closed and that the high-power plate supply cannot be turned on until the low-power plate supply switch has been closed, and also, that the modulator power cannot be applied until the final-amplifier plate-voltage has been applied. SW_5 places a 100- to 300-watt lamp (L_p) in series with the primary winding of the high-voltage plate transformer for use during the process of preliminary tuning and for local c.w. work. The final amplifier should be tuned to resonance first at low voltage and then SW_5 is closed, short-circuiting the lamp. Experience will determine what the low-voltage plate-current reading should be to have it increase to full-power value when SW_5 is closed so that the proper antenna coupling and tuning adjustments may be made at low voltage.

Preferably, SW_3 should be of the push-button type which remains closed only so long as pressure is applied. A switch of this type provides one of the simplest and most effective means of protection against accidents from high voltage. In the form which is usually considered most convenient, it consists of a switch which may be operated by pressure of the foot and is located underneath the operating table. When used in this manner, it means that the operator must be in the operating position, well removed from danger, before high voltage may be applied. If desired, SW_{3a} may be placed on the *front* of the transmitter panel so that it may be used while tuning the transmitter. SW_{3a} should, of course, be of the push-button type also.

In more elaborate installations, and in remote control systems, similarly arranged switches control relays whose contacts serve to do the actual switching at the transmitter.

Two strings of utility outlets are connected, one on each side of the entrance switch, for operation of the receiver and such accessories as monitor, lights, electric clock, soldering iron, etc. Closing the entrance switch should close those circuits which place the station in readiness for operation. SW_2 and SW_4 are normally closed and SW_3 open. When SW_1 is closed upon entering the operating room, the transmitter filaments are turned on as well as the receiver which should be plugged into line No. 2. With SW_4 closed (also SW_5 and SW_6), SW_3 performs the job of turning all plate-supplies on and off during periods of transmission and reception. Continuously operating accessories, such as the clock, should be plugged into line No. 1 so that it will not be turned off when SW_1 is opened. Line No. 1 is also of use for supplying a soldering iron, light, etc., when it is desired to remove all voltage from the transmitter by opening SW_1.

• ANTENNA SWITCHING

As pointed out in later chapters it is desirable, particularly in DX work, to use the same antenna for transmitting and receiving. This requires switching of antenna from transmitter to receiver. One of two general systems may be employed. In the first, the transmitter and receiver are each provided with an antenna tuner and the antenna transmission line is switched from one to the other. In the second system, one antenna tuner is provided for each antenna and the switch is in the low-impedance coupling line. Several arrangements are shown in Fig. 1297. The high voltages which develop

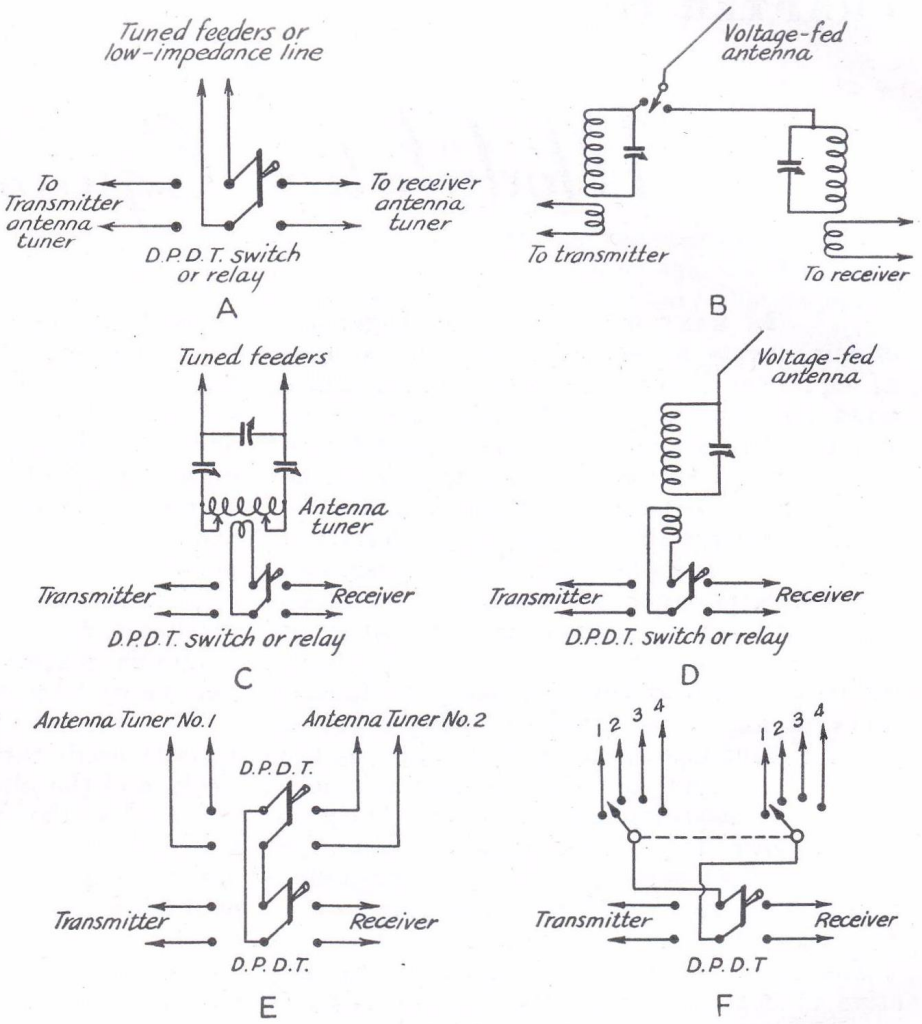

Fig. 1297 — Antenna switching systems. A — For tuned lines with separate antenna tuners or low impedance line. B — For voltage-fed antenna. C — For tuned line with single tuner. D — For voltage-fed antenna with single tuner. E — For two tuned-line antennas with tuner for each antenna or for low-impedance lines. F — For several two-wire lines.

on tuned lines require switches and wiring with good insulation. Frequently relays with low-capacity contacts are substituted for the hand-operated switches. Either way is satisfactory.

• SAFETY PRECAUTIONS

The following excerpts are taken from the ARRL safety code:

Master Switch — There should be one powerline switch, in a conspicuous and easily-accessible location on or near the transmitter, which controls all power to the transmitter.

Keys — The arm of the telegraph key should be grounded in every case. In keying circuits which do not permit a direct ground on the key, a suitably-insulated relay should always be used. Live parts of the key should be protected from accidental bodily contact by suitable covers or barriers.

Relays — Relays should be provided with covers, or installed in such fashion that accidental closing by mechanical means cannot occur.

Terminals — Exposed terminals and tube caps should be protected by insulating coverings. Barriers should be placed over exposed transformer terminal boards.

Grounds — With chassis construction, all negative terminals of plate-voltage supplies and positive terminals of bias supplies should be connected to chassis *and to a good ground*. Chassis should be connected together and to the rack, frame or cabinet, if of metal.

With breadboard construction, negative terminals of plate-voltage supplies and positive terminals of bias supplies should be connected together and to a good ground.

Cases and Cores — Transformer and choke cores, cases and other metal work not normally a part of the electrical circuit should be grounded.

Power Supply Enclosures — Power supplies should be so enclosed or constructed, or so located, that accidental bodily contact with power circuits is impossible when adjustments are being made to r.f. or audio units.

Bleeders — A bleeder resistor should be connected across the d.c. output terminals of each rectified a.c. power supply.

H. V. Leads — High-voltage leads should be a good grade of high-tension wire insulated for at least two to three times the peak operating voltage.

CHAPTER THIRTEEN

Modulation Equipment

IN MANY RESPECTS the arrangement of components is less critical in audio than in r.f. equipment; nevertheless certain principles must be observed if difficulties are to be avoided. The selection of suitable modulation equipment for any of the transmitters in the preceding chapter is not difficult if the fundamental principles of modulation as described in Chapter 5 are understood. If the transmitter is to be plate-modulated and the power input to the modulated stage is to be of the order of 100 watts and higher, a Class-B modulator will invariably be selected. A pair of modulator tubes of any type capable of the required power output may be used. The tables at the end of this chapter give the necessary information on the most popular tube types. The grid driving power requirements also are given, so that from that point on the speech amplifier tube line-up may be selected according to the principles outlined in Chapter 5.

The apparatus to be described is representative of current design practice for speech amplification, with various output levels to drive high- and low-power Class-B modulators. In some cases the power output will be sufficient to modulate low-power transmitters directly, without additional power amplification. Also, practically any of the speech amplifiers shown can be used to grid-modulate transmitters up to the highest power input permitted in amateur transmitters.

Speech-amplifier equipment, especially voltage amplifiers, should be constructed on metal chassis, with all wiring below the chassis to take advantage of the shielding afforded. Exposed leads, particularly to the grids of low-level, high-gain tubes, are likely to pick up hum from the electrostatic field which usually exists in the vicinity of house wiring. Even with the chassis, additional shielding of the input circuit of the first tube in a high-gain amplifier usually is necessary. In addition, such circuits should be separated as much as possible from power supply transformers and chokes, and also from audio transformers operating at fairly high power levels, to prevent magnetic coupling to the grid circuit which may cause hum or audio-frequency feedback.

If a low-level microphone such as the crystal type is used, the microphone, its connecting cable, and the plug or connector by which it is attached to the speech amplifier all should be shielded. The microphone and cable usually are constructed with suitable shielding. The cable shield should be connected to the speech amplifier chassis, and it is advisable — as well as frequently necessary — to connect the chassis to a ground such as a water pipe. Heater wiring should be kept as far as possible from grid leads, and either the center-tap or one side of the heater transformer secondary winding should be connected to the chassis. In a high-gain amplifier the first tube preferably should be of the type having the grid connection brought out to a top cap rather than to a base pin, since in the latter type the grid lead is exposed to the heater leads inside the tube and hence will pick up more hum. With the top-cap tubes, complete shielding of the grid lead and grid cap is a necessity.

The units shown in the chapter have been designed to give the required power output as simply and economically as possible while observing good design principles.

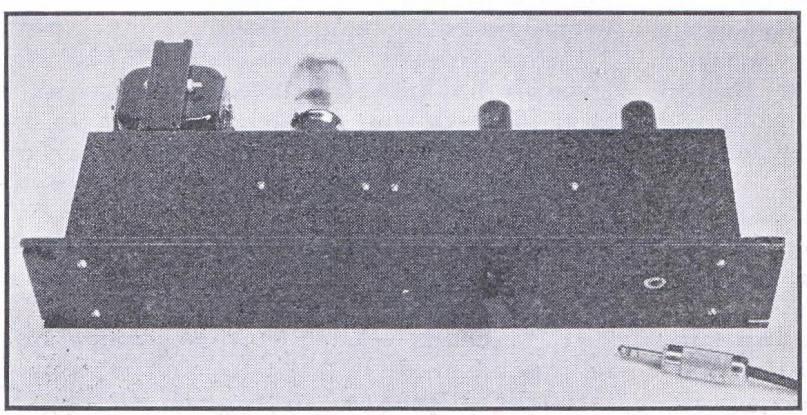

Fig. 1301 — Relay-rack mounting amplifier with 3-watt output.

• ECONOMICAL 3-WATT SPEECH AMPLIFIER

The amplifier of Figs. 1301–1303 is designed for use with crystal and velocity microphones or for carbon single- and double-button microphones, depending upon the circuit chosen. It may be used for grid-modulating r.f. amplifiers of 250 watts input or less. It is also suitable for driving a Class-B modula-

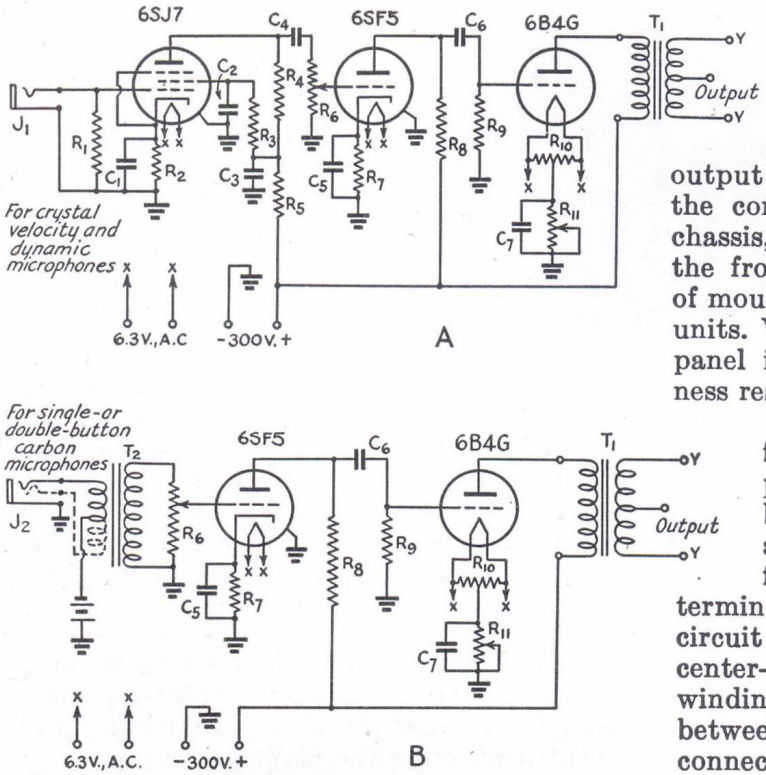

Fig. 1302 — Circuits of the 3-watt speech unit.

C_1 — 5-μfd. electrolytic, 25 volts.
C_2 — 0.05-μfd. paper, 600 volts.
C_3 — 8-μfd. electrolytic, 425 volts.
C_4 — 0.01-μfd. paper, 600 volts.
C_5 — 5-μfd. electrolytic, 25 volts.
C_6 — 0.01-μfd. paper, 600 volts.
C_7 — 25-μfd. electrolytic, 50-volt wkg.
R_1 — 5-megohm, 1 watt carbon.
R_2 — 1700 ohms, 1 watt.
R_3 — 2.5 megohms, 1 watt.
R_4 — 0.5 megohm, 1 watt.
R_5 — 50,000 ohms, 1 watt.
R_6 — 0.5-megohm potentiometer.
R_7 — 4500 ohms, 1 watt.
R_8, R_9 — 0.5 megohm, 1 watt.
R_{10} — 50 ohms center-tapped.
R_{11} — 800-ohm, 10-watt adj.
J_1 — 2-wire jack.
J_2 — 2- or 3-wire jack for s.b. or d.b. mike.
T_1 — Center-tapped output transformer (Thordarson T-67M74 with primary and secondary reversed, see text).
T_2 — S.b. or d.b. carbon mike transformer.

tor whose grid driving power requirements are less than 3 watts.

The amplifier is constructed on a metal chassis 17 inches long, 4 inches deep, and 3 inches high. Tubes and output transformer, instead of being placed in the conventional arrangement on top of the chassis, are mounted on the rear flange, while the front flange is screwed against the back of mounting panel as in ordinary chassis-panel units. With this layout, a 3½-inch relay-rack panel is adequate, and rack-space compactness results.

The grid-modulation output transformer shown is designed to couple the plates of pushpull 2A3 tubes to the grid bias circuit of an r.f. amplifier. In this application, the windings of the transformer are reversed, so that the two-terminal winding is connected in the plate circuit of the 6B4G amplifier tube, and the center-tapped winding is available as an output winding. Half of this winding (the portion between either end and the center tap) may be connected in an r.f. amplifier grid- or suppressor-bias circuit for modulator use, or the full winding with center tap may be used as a Class-B input winding, with connection direct to the grids of tubes such as 809's or TZ20's.

A power supply which will deliver 300 volts at 70 ma. is required. It should be well filtered, preferably with a two-section condenser-input filter as described in Chapter 8. Heater requirements of the amplifier are 6.3 volts at 1.6 amp.

• A 10-WATT CLASS-B MODULATOR FOR LOW-POWER TRANSMITTERS

A receiving-tube modulator, with speech amplifier for either crystal or carbon microphones, is shown in Figs. 1304–1306, inclusive. It is suitable for modulating transmitters of 20 watts input or less, such as the low-power equipment frequently used on ultra-high frequencies. Type 6A6 tubes are used throughout in the audio circuits, and an inexpensive power supply is included so that the unit is complete and ready for connection to the transmitter.

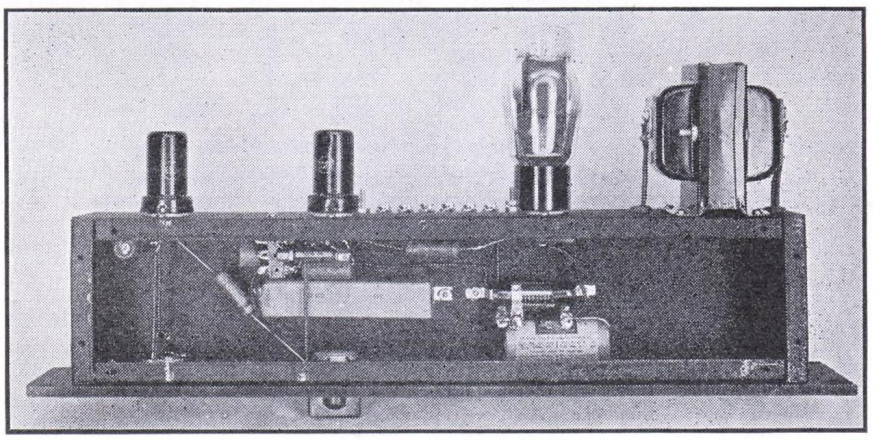

Fig. 1303 — The bottom view shows the tube- and transformer-mounting used in the 3-watt amplifier.

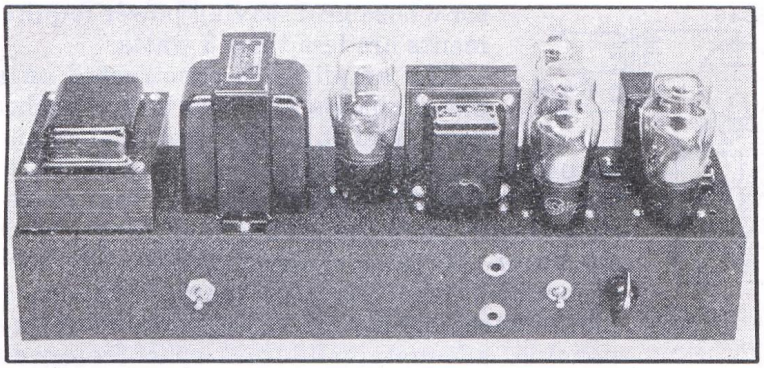

Fig. 1304 — This 10-watt audio unit is complete with power supply. Three double triodes provide a four-stage amplifier with Class-B output. Any of the popular types of microphones may be used.

Fig. 1305 shows the circuit diagram of the speech amplifier-modulator. One section of the first 6A6 is used as the input amplifier for a crystal microphone, the other half being a second speech-amplifier stage. Carbon microphones, which need less gain, are transformer-coupled to the second section of the first 6A6. The type of jack shown at J_2 in the circuit diagram must be installed if a double-button microphone is to be used. J_2 may be the same as J_1 if a single-button microphone is to be used exclusively.

The gain control is connected in the grid circuit of the second section of the first tube, which is resistance coupled to the driver. The driver tube, also a 6A6, has its two sections connected in parallel.

The modulation transformer specified is designed to work between 6A6 plates and a 6500-ohm load; the impedance ratio actually used will of course depend on the load into which the modulator will work. A milliammeter can be connected across R_1 to measure the Class-B plate current.

The power supply is of the condenser-input type and will deliver 350 volts at 90 ma. A switch in the transformer center-tap lead is used for turning the plate voltage on and off without affecting the filament supply.

The power transformer is submounted at the left end of the chassis. Next to it is the filter choke, L_1, followed by the rectifier tube and T_3, the modulation transformer. The driver tube is at the extreme right, with T_2,

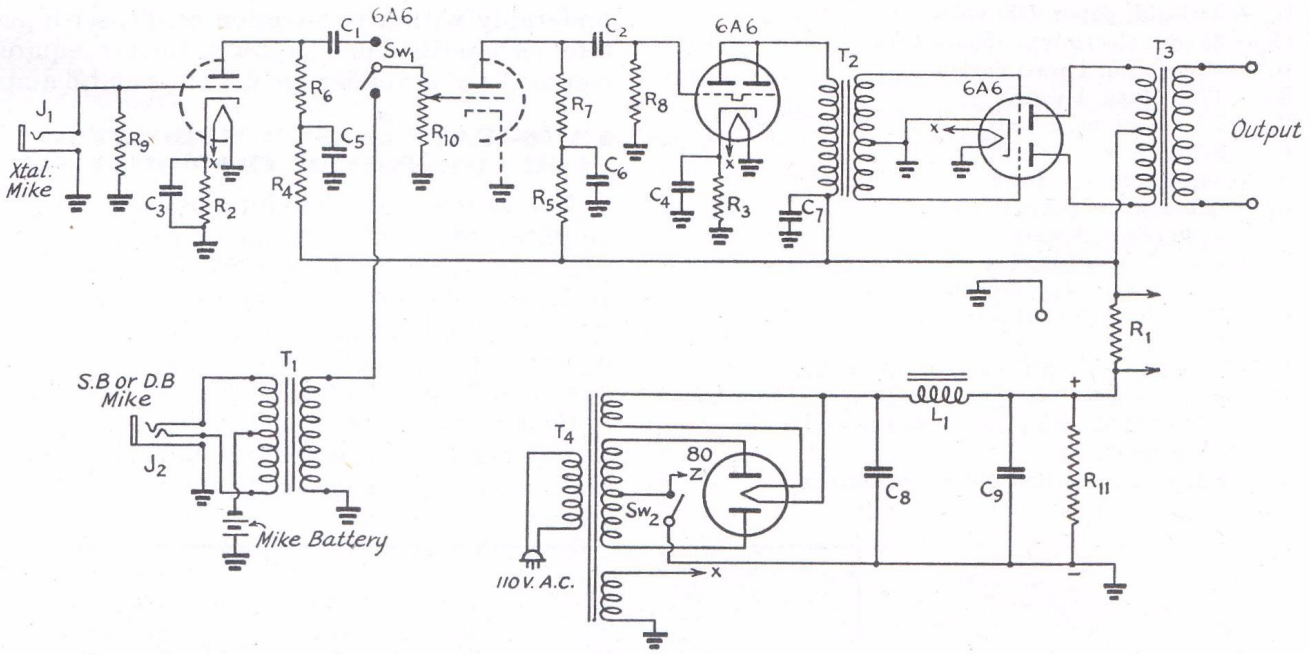

Fig. 1305 — Circuit diagram of the complete 10-watt audio system.

C_1, C_2 — 0.1-μfd., 600-volt paper.
C_3, C_4 — 10-μfd., 50-volt electrolytic.
C_5, C_6, C_7, C_8, C_9 — 8-μfd., 450-volt electrolytic.
R_1 — 25 ohms, ½ watt.
R_2, R_3 — 900 ohms, 1 watt.
R_4, R_5 — 50,000 ohms, ½ watt.
R_6, R_7 — 0.25 megohm, ½ watt.
R_8 — 1 megohm, ½ watt.
R_9 — 5 megohms, ½ watt.
R_{10} — 500,000-ohm volume control.
R_{11} — 25,000 ohms, 10-watt.
Sw_1 — S.p.d.t. toggle switch.
Sw_2 — S.p.s.t. toggle switch (see text).
J_1 — Closed-circuit jack.
J_2 — 2- or 3-wire jack for s.b. or d.b. mike.
T_1 — S.b. or d.b. microphone transformer (Stancor A-4351).
T_2 — Driver transformer, parallel 6A6 plates to 6A6 Class-B (Stancor A-4216).
T_3 — Output transformer, 6A6 Class-B to 6500-ohm load (Stancor A-3845).
T_4 — Power transformer, 700 volts at 90 ma., c.t.; 5 v. at 3 amp.; 6.3 v. at 3.5 amp.
L_1 — Filter choke, 5 henrys, 200 ma., 80 ohms (Thordarson T-67C49).

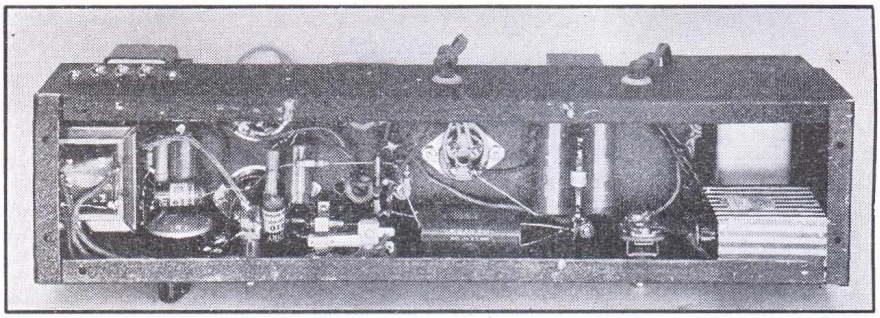

Fig. 1306 — The below-chassis wiring is visible in this view of the 10-watt modulator unit. It is advisable to keep the microphone input leads short in order to reduce hum pickup.

the driver transformer, behind it. The Class-B tube is to the rear and in line with the speech-amplifier tube. For convenience in wiring, the audio tube sockets should be mounted with the filament prongs facing the right-hand end of the chassis.

The plate voltage switch is on the front of the chassis toward the left. The microphone switch, gain control and microphone jacks are grouped at the right.

The bottom-view photograph shows the lay-out for the components mounted below the chasis. T_1 is mounted at the left end. Wiring to the driver tube socket and the transformer secondary winding should be completed before the transformer is bolted in place, as it is difficult to reach the connecting points with a soldering iron afterwards. Short leads between the gain control, microphone switch, and the tube socket can be obtained by making the gain-control contacts face toward the switch as shown.

The compact microphone battery (Burgess type 3A2) can be held securely in place without brackets or clips if it is wedged in between the bottom of the power transformer and the lips on the bottom of the chassis. A 3-volt battery is sufficient for most carbon microphones, and low current will frequently give better speech quality. The 115-volt a.c. and meter lines (rubber-covered lamp cord) enter the chassis through rubber grommets. A three-contact terminal strip is located at the right end of the base (left end in the bottom view). One of the contacts is for an external ground connection and the other two are connected to the modulation transformer output winding.

The measured output of the unit shown in the photographs is 11 watts at the point where distortion just began to be noticeable. This power is ample for modulating a low-power transmitter running 20 watts or so to the final stage.

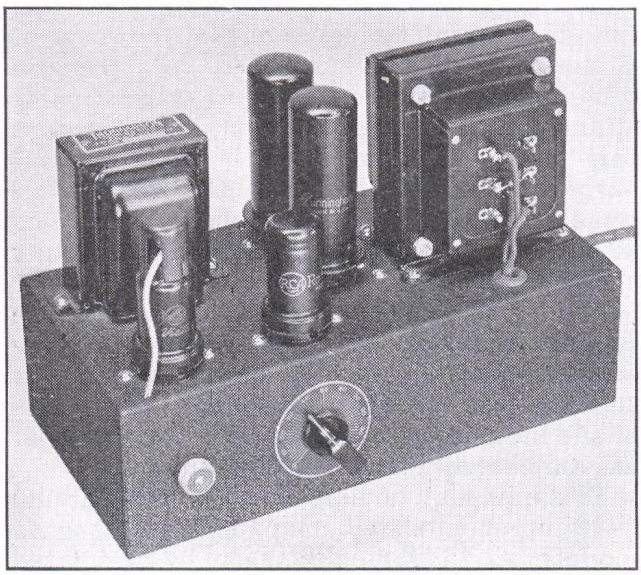

Fig. 1307 — A low-cost speech-amplifier or low-power modulator with a maximum audio output of 20 watts. The 6J7 is in the left near corner of the chassis, with the 6J5 to its right, just above the volume control.

• A 20-WATT SPEECH AMPLIFIER OR MODULATOR

The amplifier shown in Figs. 1307–1309 will deliver audio power outputs up to 20 watts (from the output transformer secondary) with ample gain for ordinary communications-type crystal microphones. Class-AB 6L6's are used in the output stage, preceded by a 6J5 and 6J7.

The unit is built on a 5 by 10 by 3 inch chassis, with the parts arranged as shown in the photographs. About the only constructional precaution necessary is to keep the lead from the microphone socket (a jack may be used instead of the screw-on type if desired) short, and to shield thoroughly the input circuit to the grid of the 6J7. This shielding is necessary to reduce hum. In this amplifier, the 6J7 grid resistor, R_1, is enclosed with the input jack in a National type J-1 jack shield, and a shielded lead is run from the jack shield to the grid of the 6J7. A metal slip-on shield covers the grid cap of the tube.

To realize maximum power output, the "B" supply should be capable of delivering about 145 ma. at 360 volts. A condenser-input supply of ordinary design (Chapter 8) may be used, since the variation in plate current is relatively small. The current is approximately 120 ma. with no input signal and 145 ma. at full output. If an output of 12 or 13 watts will

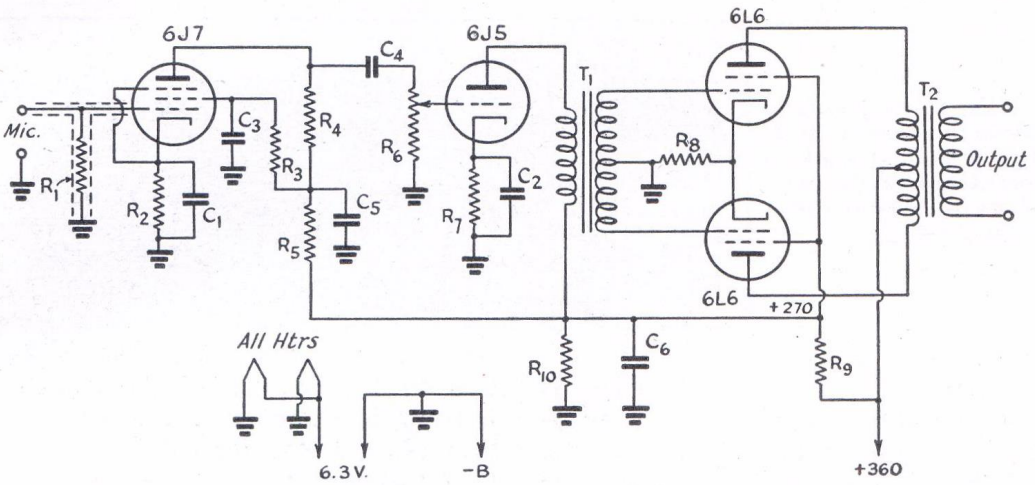

Fig. 1308 — Speech amplifier circuit for power outputs up to 20 watts.

C_1, C_2 — 20-μfd. electrolytic, 50 volts.
C_3 — 0.1-μfd. paper.
C_4 — 0.01-μfd. paper.
C_5, C_6 — 8-μfd. electrolytic, 450 volts.
R_1 — 5 megohms, ½ watt.
R_2 — 1300 ohms, ½ watt.
R_3 — 1.5 megohms, ½ watt.
R_4 — 0.25 megohm, ½ watt.
R_5 — 50,000 ohms, ½ watt.
R_6 — 1-megohm volume control.
R_7 — 1500 ohms, 1 watt.
R_8 — 250 ohms, 10 watts.
R_9 — 2000 ohms, 10 watts.
R_{10} — 20,000 ohms, 25 watts.
T_1 — Interstage audio, single plate to p.p. grids, ratio 3:1 (Thordarson T-57A41).
T_2 — Output transformer, depending on requirements. A multi-tap modulation transformer (Thordarson T-19M14) is shown.

be sufficient, R_9 and R_{10} may be omitted and all tubes fed directly from a "B" supply giving 270 volts at approximately 175 ma.

The output transformer shown is a universal modulation type suitable for coupling into the plate circuit of a low-power r.f. amplifier (input 40 watts maximum for 100 per cent modulation) for plate modulation. For cathode modulation, the r.f. input power that can be modulated may be determined from the data in Chapter 5. The amplifier may also be used for grid-bias modulation with the transformer specified.

If the unit is to be used to drive a Class-B modulator it is recommended that the Class-B tubes be of the zero-bias type rather than types requiring fixed bias. A suitable output transformer must be substituted for this purpose; information may be found in transformer manufacturers' catalogs.

The frequency response of the amplifier is ample for the range of frequencies encountered in voice communication. It may be extended for high-quality reproduction of music by using higher-priced audio transformers.

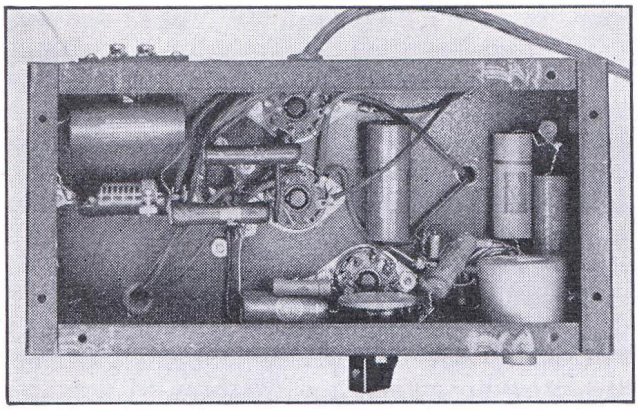

Fig. 1309 — Bottom view of the 20-watt amplifier. The most important constructional point is complete shielding of the microphone input circuit to the grid of the 6J7 first amplifier.

• A 40-WATT OUTPUT SPEECH AMPLIFIER OR MODULATOR

The 40-watt amplifier shown in Figs. 1310–1312 resembles in many respects the 20-watt amplifier just described. The first two stages are, in fact, identical in circuit and construction. To obtain the higher output, however, it is necessary to drive the 6L6's into the grid current region, so that a driver stage capable of furnishing sufficient power is required. A pair of 6J5's in push-pull is used for this purpose, inserted between the 6J5 single stage and the 6L6's. Decoupling is provided (R_9 and C_5) to prevent motorboating because of the higher gain.

A 6 by 14 by 3-inch chassis is used for the 40-watt amplifier. The photographs show the arrangement of parts. As in the case of the 20-watt unit, complete shielding of the microphone input circuit is essential. The amplifier has ample gain for crystal microphones.

This unit may be used to plate-modulate 80 watts input to an r.f. amplifier. For cathode modulation, the input which can be modulated will depend upon the type of operation chosen, as described in Chapter 5; with 55 per cent plate efficiency in the r.f. stage, for instance, the input may be of the order of 200 watts, making

an allowance for a small amount of audio power taken by the grid circuit.

A high-power Class-B modulator can be driven by the unit; data on suitable modulator tubes are given later in this chapter. Zero-bias tubes should be used because they present a more constant load to the 6L6's than do relatively-low amplification factor tubes which require fixed bias for Class-B operation. A suitable Class-B driver transformer must be substituted for the universal modulation transformer shown.

The power supply should have good voltage regulation, since the total "B" current varies from approximately 140 ma. with no signal to 265 ma. at full output. A heavy-duty choke-input supply should be used; general design data will be found in Chapter 8. Heater requirements are 6.3 volts at 3 amp. Bias for the 6L6 stage should be supplied by a 22.5-volt "B" battery block; a small-sized unit will be satisfactory since no current is drawn from it.

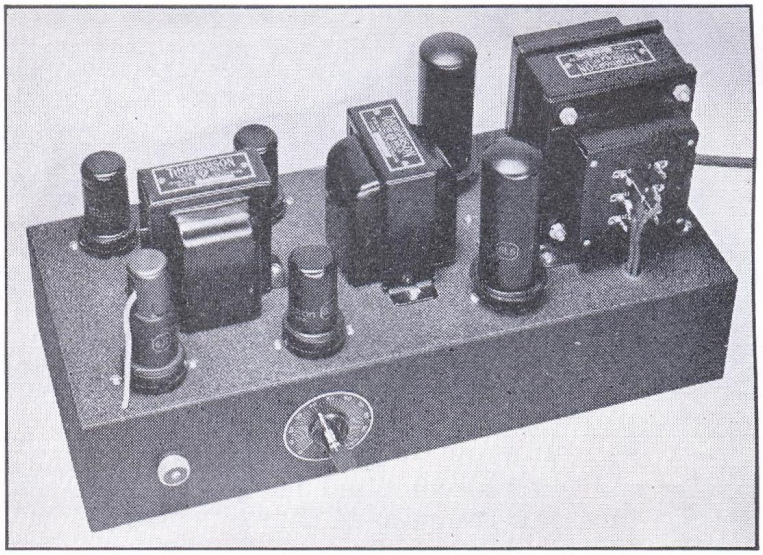

Fig. 1310 — A 40-watt speech amplifier or modulator of inexpensive construction. The 6J7 and first 6J5 are at the front, near the microphone socket and volume control, respectively. T_1 is just behind them, and the push-pull 6J5's are at the rear of the chassis behind T_1. T_2, the 6L6's, and T_3 follow in order to the right.

• A PUSH-PULL 2A3 AMPLIFIER WITH VOLUME COMPRESSION

Ideally, a Class-B modulator should be driven by an amplifier having exceptionally good voltage regulation to minimize distortion (see Chapter 5). For average amateur work the 6L6 amplifiers just described will give entirely satisfactory results as drivers for Class-B stages, when operated well within their capabilities, especially with zero bias Class-B tubes. However, somewhat better performance can be secured by using triode drivers, especially when the grid power requirements of the Class-B stage are modest enough to make the use of triodes such as the 2A3 practicable. The amplifier shown in Figs. 1313–1315, inclusive, has an output (from the transformer secondary) of 6 watts with negligible distortion, and is thus suitable for driving Class-B stages of 100 to 250 watts output.

The amplifier also incorporates volume compression to maintain a high average percentage of modulation (Chapter 5). The side

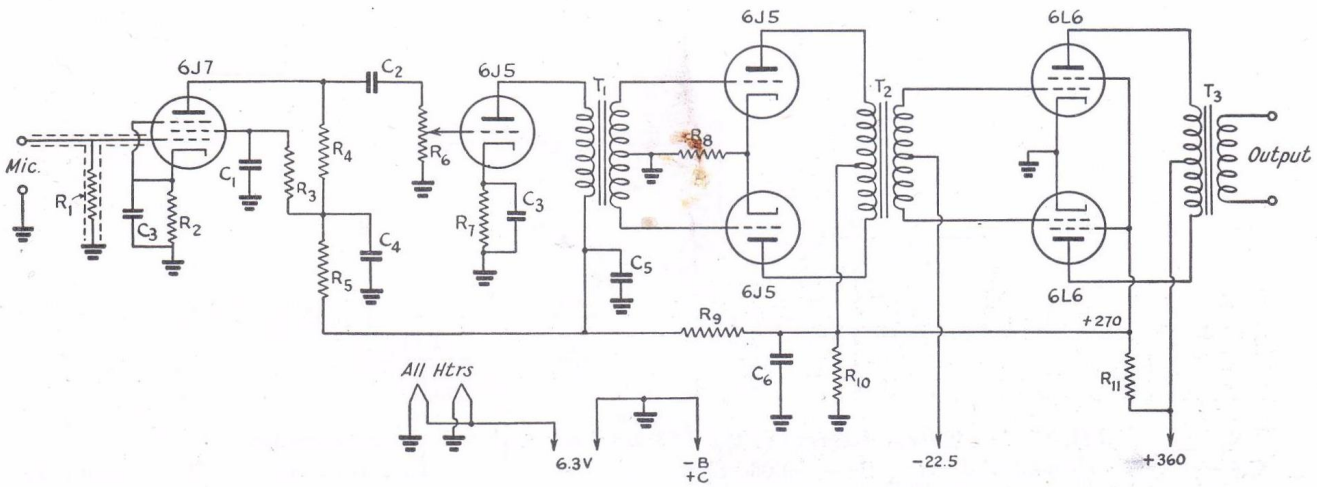

Fig. 1311 — Circuit diagram of the 40-watt speech amplifier modulator.

C_1 — 0.1-μfd. paper.
C_2 — 0.01-μfd. paper.
C_3 — 20-μfd. electrolytic, 50 volts.
C_4, C_5, C_6 — 8-μfd. electrolytic, 450 volts.
R_1 — 5 megohms, ½ watt.
R_2 — 1300 ohms, ½ watt.
R_3 — 1.5 megohm, ½ watt.
R_4 — 0.25 megohm, ½ watt.
R_5 — 50,000 ohms, ½ watt.
R_6 — 1-megohm volume control.
R_7 — 1500 ohms, 1 watt.
R_8 — 750 ohms, 1 watt.
R_9 — 12,000 ohms, 1 watt.
R_{10} — 20,000 ohms, 25 watts.
R_{11} — 1500 ohms, 10 watts.
T_1 — Interstage audio, single plate to p.p. grids, 3:1 ratio (Thordarson T57A41).
T_2 — Driver, p.p. 6J5's to 6L6's Class AB2 (Thordarson T84D59).
T_3 — Output transformer, depending on requirements. A multi-tap modulation transformer (Thordarson T19M15) is shown.

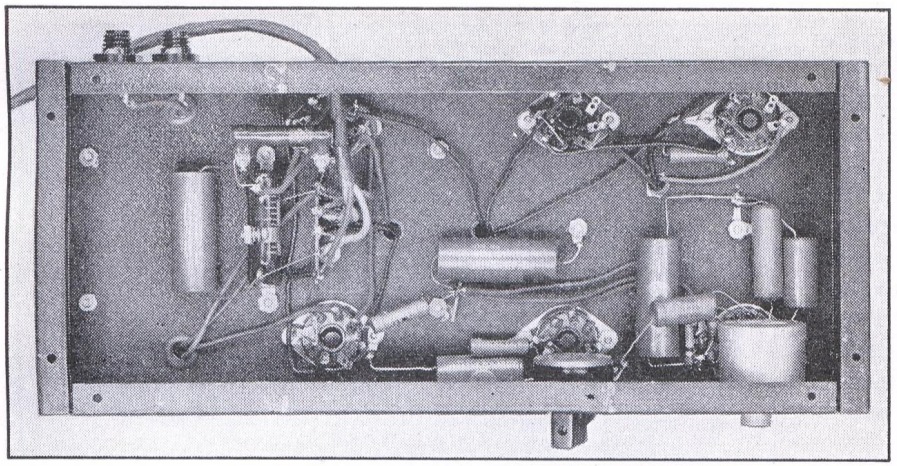

Fig. 1312 — Underneath the chassis of the 40-watt amplifier.

amplifier and rectifier, combined in the 6SQ7 tube, rectifies some of the voice current, and the rectified output is filtered and applied to the Nos. 1 and 3 grids of a pentagrid amplifier, thereby varying its gain in inverse proportion to the signal strength. With proper adjustment, an average increase in modulation level of about 7 db. can be secured without exceeding 100 per cent modulation on peaks.

The amplifier proper consists of a 6J7 first stage, followed by a 6L7 amplifier-compressor. The 2A3 grids are driven by a 6N7 self-balancing phase inverter. The operation of the 2A3's is purely Class A, without grid current.

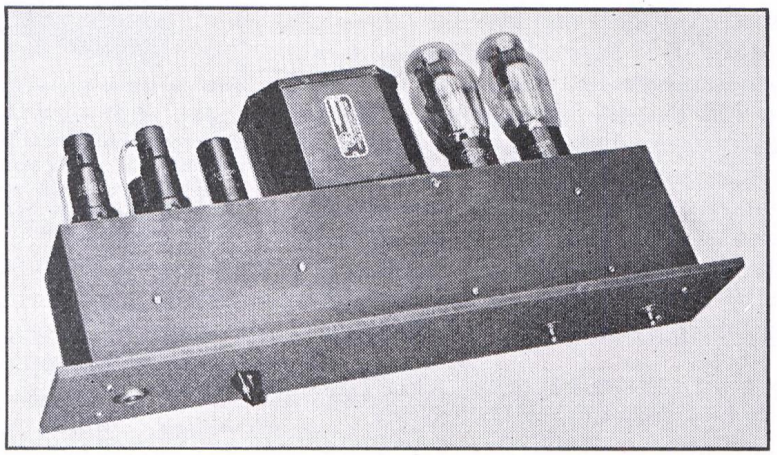

Fig. 1313 — A push-pull 2A3 speech amplifier having an output of approximately 6 watts. A volume compression circuit is incorporated in the amplifier.

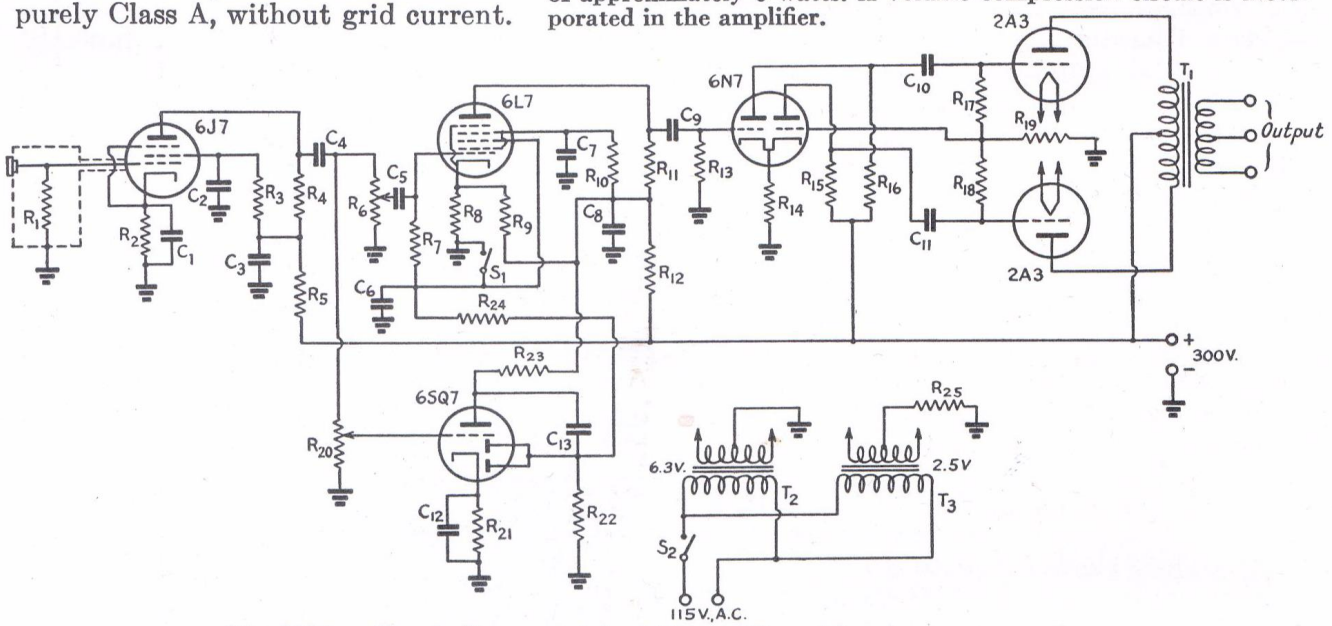

Fig. 1314 — Circuit diagram of the 2A3 amplifier with volume compression.

C_1, C_{12} — 10-μfd. electrolytic, 50 volts.
C_2, C_4, C_5, C_6, C_9, C_{10}, C_{11}, C_{13} — 0.1-μfd. paper, 400 volts.
C_3, C_8 — 8-μfd. electrolytic, 450 volts.
C_7 — 0.5-μfd. paper, 400 volts.
R_1 — 5 megohms, ½ watt.
R_2, R_8 — 1200 ohms, ½ watt.
R_3, R_7 — 2 megohms, ½ watt.
R_4, R_{13}, R_{22}, R_{24} — 0.5 megohm, ½ watt.
R_5 — 50,000 ohms, ½ watt.
R_6, R_{20} — 0.5-megohm volume control.
R_9 — 0.25 megohm, 1 watt.
R_{10}, R_{11}, R_{23} — 0.1 megohm, ½ watt.
R_{12} — 10,000 ohms, ½ watt.
R_{14} — 1500 ohms, ½ watt.
R_{15}, R_{16} — 0.1 megohm, 1 watt.
R_{17}, R_{18}, R_{19} — 0.25 megohm, ½ watt.
R_{21} — 5000 ohms, ½ watt.
R_{25} — 750 ohms, 10 watts.
T_1 — Output transformer to match Class-B grids. (The unit shown is a U.T.C. PA-53AX).
T_2 — Filament transformer, 6.3 volts, 2 amp.
T_3 — Filament transformer, 2.5 volts, 5 amp.

TABLE I — RESISTANCE-COUPLED AMPLIFIER DATA

Data are given for a plate-supply of 300 volts; departures of as much as 50% from this supply voltage will not materially change the operating conditions or the voltage gain, but the output voltage will be in proportion to the new voltage. Voltage gain is measured at 400 cycles; condenser values given are based on 100-cycle cut-off. For increased low-frequency response, all condensers may be made larger than specified (cut-off frequency in inverse proportion to condenser values provided all are changed in the same proportion). A variation of 10% in the values given has negligible effect on the performance.

High-frequency cut-off with pentodes is approximately 20,000 cycles with a plate resistor of 0.1 megohm, 10,000 cycles with 0.25 megohm, and 5000 cycles with 0.5 megohm. With triode amplifiers, the high-frequency cut-off is well above the audio range.

	Plate Resistor Megohms	Next-Stage Grid Resistor Megohms	Screen Resistor Megohms	Cathode Resistor Ohms	Screen By-pass μfd.	Cathode By-pass μfd.	Blocking Condenser μfd.	Output Volts (Peak)[2]	Voltage Gain[3]
6A6, 6N7 53	0.1	0.1	—	1150[1]	—	—	0.03	60	20
		0.25	—	1500[1]	—	—	0.015	83	22
		0.5	—	1750[1]	—	—	0.007	86	23
	0.25	0.25	—	2650[1]	—	—	0.015	75	23
		0.5	—	3400[1]	—	—	0.0055	87	24
		1.0	—	4000[1]	—	—	0.003	100	24
	0.5	0.5	—	4850[1]	—	—	0.0055	76	23
		1.0	—	6100[1]	—	—	0.003	94	24
		2.0	—	7150[1]	—	—	0.0015	104	24
6C5 (Also 6J7, 6C6, 57, 6W7, 7C7 as triodes)[4]	0.05	0.05	—	2100	—	3.16	0.075	57	11
		0.1	—	2600	—	2.3	0.04	70	11
		0.25	—	3100	—	2.2	0.015	83	12
	0.1	0.1	—	3800	—	1.7	0.035	65	12
		0.25	—	5300	—	1.3	0.015	84	13
		0.5	—	6000	—	1.17	0.008	88	13
	0.25	0.25	—	9600	—	0.9	0.015	73	13
		0.5	—	12,300	—	0.59	0.008	85	14
		1.0	—	14,000	—	0.37	0.003	97	14
6C6, 6J7, 6W7, 7C7, 57 (Pentode)	0.1	0.1	0.44	500	0.07	8.5	0.02	55	61
		0.25	0.5	450	0.07	8.3	0.01	81	82
		0.5	0.53	600	0.06	8.0	0.006	96	94
	0.25	0.25	1.18	1100	0.04	5.5	0.008	81	104
		0.5	1.18	1200	0.04	5.4	0.005	104	140
		1.0	1.45	1300	0.05	5.8	0.005	110	185
	0.5	0.5	2.45	1700	0.04	4.2	0.005	75	161
		1.0	2.9	2200	0.04	4.1	0.003	97	250
		2.0	2.95	2300	0.04	4.0	0.0025	100	240
6C8G (One triode unit)	0.1	0.1	—	2120	—	3.93	0.037	55	22
		0.25	—	2840	—	2.01	0.013	73	23
		0.5	—	3250	—	1.79	0.007	80	25
	0.25	0.25	—	4750	—	1.29	0.013	64	25
		0.5	—	6100	—	0.96	0.0065	80	26
		1.0	—	7100	—	0.77	0.004	90	27
	0.5	0.5	—	9000	—	0.67	0.007	67	27
		1.0	—	11,500	—	0.48	0.004	83	27
		2.0	—	14,500	—	0.37	0.002	96	28
6F5, 6SF5, 7B4	0.1	0.1	—	1300	—	5.0	0.025	33	42
		0.25	—	1600	—	3.7	0.01	43	49
		0.5	—	1700	—	3.2	0.006	48	52
	0.25	0.25	—	2600	—	2.5	0.01	41	56
		0.5	—	3200	—	2.1	0.007	54	63
		1.0	—	3500	—	2.0	0.004	63	67
	0.5	0.5	—	4500	—	1.5	0.006	50	65
		1.0	—	5400	—	1.2	0.004	62	70
		2.0	—	6100	—	0.93	0.002	70	70
6F8G (one triode unit), 6J5, 6J5G, 7A4, 7N7	0.05	0.05	—	1020	—	3.56	0.06	41	13
		0.1	—	1270	—	2.96	0.034	51	14
		0.25	—	1500	—	2.15	0.012	60	14
	0.1	0.1	—	1900	—	2.31	0.035	43	14
		0.25	—	2440	—	1.42	0.0125	56	14
		0.5	—	2700	—	1.2	0.0065	64	14
	0.25	0.25	—	4590	—	0.87	0.013	46	14
		0.5	—	5770	—	0.64	0.0075	57	14
		1.0	—	6950	—	0.54	0.004	64	14
6L5G	0.05	0.05	—	1740	—	2.91	0.06	56	11[5]
		0.1	—	2160	—	2.18	0.032	68	12[5]
		0.25	—	2600	—	1.82	0.015	79	12[5]
	0.1	0.1	—	3070	—	1.64	0.032	60	12[5]
		0.25	—	4140	—	1.1	0.014	79	13[5]
		0.5	—	4700	—	0.81	0.0075	89	13[5]
	0.25	0.25	—	6900	—	0.57	0.013	64	13[5]
		0.5	—	9100	—	0.46	0.0075	80	13[5]
		1.0	—	10,750	—	0.4	0.005	88	13[5]

TABLE I — RESISTANCE-COUPLED AMPLIFIER DATA — *Continued*

	Plate Resistor Megohms	Next-Stage Grid Resistor Megohms	Screen Resistor Megohms	Cathode Resistor Ohms	Screen By-pass μfd.	Cathode By-pass μfd.	Blocking Condenser μfd.	Output Volts (Peak) [2]	Voltage Gain [3]
6R7, 6R7G, 7E6	0.05	0.05	—	1600	—	2.6	0.055	50	9
		0.1	—	2000	—	2.0	0.03	62	9
		0.25	—	2400	—	1.6	0.015	71	10
	0.1	0.1	—	2900	—	1.4	0.03	52	10
		0.25	—	3800	—	1.1	0.015	68	10
		0.5	—	4400	—	1.0	0.007	71	10
	0.25	0.25	—	6300	—	0.7	0.015	54	10
		0.5	—	8400	—	0.5	0.007	62	11
		1.0	—	10,600	—	0.44	0.004	74	11
6S7	0.1	0.1	0.59	430	0.077	8.5	0.0167	57	57 [5]
		0.25	0.67	440	0.071	8.0	0.01	73	78 [5]
		0.5	0.71	440	0.071	8.0	0.0066	82	89 [5]
	0.25	0.25	1.7	620	0.058	6.0	0.0071	54	98 [5]
		0.5	1.95	650	0.057	5.8	0.005	66	122 [5]
		1.0	2.1	700	0.055	5.2	0.0036	76	136 [5]
	0.5	0.5	3.6	1000	0.04	4.1	0.0037	52	136 [5]
		1.0	3.9	1080	0.041	3.9	0.0029	66	162 [5]
		2.0	4.1	1120	0.043	3.8	0.0023	73	174 [5]
6SC7	0.1	0.1	—	750 [1]	—	—	0.033	35	29
		0.25	—	930 [1]	—	—	0.014	50	34
		0.5	—	1040 [1]	—	—	0.007	54	36
	0.25	0.25	—	1400 [1]	—	—	0.012	45	39
		0.5	—	1680 [1]	—	—	0.006	55	42
		1.0	—	1840 [1]	—	—	0.003	64	45
	0.5	0.5	—	2330 [1]	—	—	0.006	50	45
		1.0	—	2980 [1]	—	—	0.003	62	48
		2.0	—	3280 [1]	—	—	0.002	72	49
6SJ7	0.1	0.1	0.35	500	0.10	11.6	0.019	72	67
		0.25	0.37	530	0.09	10.9	0.016	96	98
		0.5	0.47	590	0.09	9.9	0.007	101	104
	0.25	0.25	0.89	850	0.07	8.5	0.011	79	139
		0.5	1.10	860	0.06	7.4	0.004	88	167
		1.0	1.18	910	0.06	6.9	0.003	98	185
	0.5	0.5	2.0	1300	0.06	6.0	0.004	64	200
		1.0	2.2	1410	0.05	5.8	0.002	79	238
		2.0	2.5	1530	0.04	5.2	0.0015	89	263
6SQ7, 6B6G, 7B6, 2A6, 75	0.1	0.1	—	1900	—	4.0	0.03	31	31
		0.25	—	2200	—	3.5	0.015	41	39
		0.5	—	2300	—	3.0	0.007	45	42
	0.25	0.25	—	3300	—	2.7	0.015	42	48
		0.5	—	3900	—	2.0	0.007	51	53
		1.0	—	4200	—	1.8	0.004	60	56
	0.5	0.5	—	5300	—	1.6	0.007	47	58
		1.0	—	6100	—	1.3	0.004	62	60
		2.0	—	7000	—	1.2	0.002	67	63
6T7G	0.1	0.1	—	1950	—	2.85	0.0245	44	27 [5]
		0.25	—	2400	—	2.55	0.0135	58	32 [5]
		0.5	—	2640	—	2.25	0.008	64	33 [5]
	0.25	0.25	—	3760	—	1.57	0.012	57	37 [5]
		0.5	—	4580	—	1.35	0.0075	69	40 [5]
		1.0	—	5220	—	1.23	0.005	80	41 [5]
	0.5	0.5	—	6570	—	1.02	0.008	62	42 [5]
		1.0	—	8200	—	0.82	0.0055	77	43 [5]
		2.0	—	9600	—	0.70	0.004	86	44 [5]
56 76	0.05	0.05	—	2400	—	2.8	0.08	65	8.3
		0.1	—	3100	—	2.2	0.045	80	8.9
		0.25	—	3800	—	1.8	0.02	95	9.4
	0.1	0.1	—	4500	—	1.6	0.04	74	9.5
		0.25	—	6400	—	1.2	0.02	95	10.0
		0.5	—	7500	—	0.98	0.009	104	10.0
	0.25	0.25	—	11,100	—	0.69	0.02	82	10.0
		0.5	—	15,200	—	0.5	0.009	96	10.0
		1.0	—	18,300	—	0.4	0.005	108	10.0

[1] Value for both triode sections, assuming both are working under same conditions. In phase inverter service, the cathode resistor should not be by-passed.
[2] Voltage across next-stage grid resistor at grid-current point.
[3] At 5 volts r.m.s. output.
[4] Screen and suppressor tied to plate.
[5] At 4 volts r.m.s. output.

TABLE II—CLASS-B MODULATOR DATA

Class-B Tubes (2)	Fil. Volts	Plate Volts	Grid Volts App.	Peak A.F. Grid-to-Grid Voltage	Zero-Sig.[1] Plate Current Ma.	Max.-Sig.[1] Plate Current Ma.[2]	Load Res. Plate-to-Plate Ohms	Max.-Sig. Driving Power Watts[3]	Max.-Sig.[1] Power Output Watts[3]
RK-59[4]	6.3	500	−17	—	—	90	—	0.9	30
HY60[7]	6.3	300	−22.5	63	75	120	5,000	4.0	22
		400	−22.5	57	75	120	6,000	3.0	30
HY65[5]	6.3	450	—	—	—	125	—	0.4	34
801-A/801	7.5	600	−75	320	8	130	10,000	3.0	45
HY31Z[4 5]	6.3	300	0	104	20	100	5,000	1.4	18
HY1231Z[4 5]	12.6	400	0	140	26	150	5,000	2.0	40
		500	0	131	36	150	7,000	1.8	51
815[8]	6.3	400	−15	60	22	150	8,000	0.36	42
		500[6]	−15	60	20	150	6,200	0.36	54
1624[7]	2.5	400	−16.5	77	75	150	6,000	0.4	36
		600	−25	106	42	180	7,500	1.2	72
HY6L6GX[7]	6.3	400	−25	80	100	230	3,800	0.35	60
		500	−25	80	100	230	4,550	0.6	75
TZ20	7.5	750	0	195	—	170	9,000	2.6	80
HY61/807[7]		400	−25	80	100	230	3,800	0.35	60
RK-807	6.3	500	−25	80	100	230	4,550	0.6	75
		600	−30	80	60	200	6,600	0.4	80
HY69[5 7]	6.3	300	−25	106	60	150	4,000	0.25	30
HY1269[5 7]	12.6	400	−25	145	60	170	4,000	0.4	40
		600	−35	183	65	120	4,500	0.3	65
		500	−25	120	65	200	5,000	0.7	97
RK12	6.3	750	0	129	50	200	9,600	3.4	100
800	7.5	750	−40	320	26	210	6,400	6.0	90
		1000	−55	300	28	160	12,500	4.4	100
		1250	−70	300	30	130	21,000	3.4	106
HY30Z	6.3	600	0	171	18	180	6,000	Note 9	75
		750	0	167	22	180	8,000	"	95
		850	0	171	28	180	10,000	"	110
807[10]	6.3	400	−25	78	100	240	3,200	0.2	55
1625[10]	12.6	500	−25	78	100	240	4,240	0.2	75
		600	−30	78	60	200	6,400	0.1	80
		750[6]	−32	92	60	240	6,950	0.2	120
HK-24	6.3	1000	−29	248	30	150	15,000	4.5	105
		1250	−42	256	24	136	21,200	4.2	120
809	6.3	500	−10	170	40	200	5,200	3.5	60
		750	−25	200	35	200	8,400	4.0	100
		1000[6]	−40	230	30	200	12,000	4.2	145
830-B	10	800	−27	250	20	280	6,000	5.0	135
		1000	−35	270	20	280	7,600	6.0	175
HY40Z	7.5	750	0	171	32	225	6,000	Note 9	110
		850	0	185	40	250	7,000	"	155
		1000	0	185	45	250	9,000	"	185
RK-31	7.5	1000	0	141	25	230	11,000	3.7	160
		1250	0	141	35	220	18,000	4.4	190
808	7.5	1250	−15	240	40	230	12,700	7.8	190
		1500	−25	220	30	190	18,300	4.8	185
RK-37	7.5	1250	−35	282	25	235	18,000	7.2	200
811	6.3	1250	0	140	48	200	15,000	3.8	175
		1500[6]	− 9	160	20	200	18,000	4.2	225
35T	5.0 to 5.1	1000	−22	—	—	—	7,200	—	150
		1250	−30	—	—	—	9,600	—	200
		1500	−40	—	—	—	12,800	—	230
TZ40[6]	7.5	1000	0	220	—	280	7,350	5.5	175
		1250	− 4.5	269	—	280	10,000	6.0	225
		1500	− 9	265	—	250	12,000	6.0	250
RK52	7.5	1250	0	180	40	300	10,000	7.5	250
203-A	10	1000	−35	310	26	320	6,900	10	200
		1250	−45	330	26	320	9,000	11	260
211	10	1000	−77	380	20	320	6,900	7.5	200
		1250	−100	410	20	320	9,000	8.0	260
838	10	1000	0	200	106	320	6,900	7.0	200
		1250	0	200	148	320	9,000	7.5	260
HK-158	12.6	750	−25	300	50	330	4,500	17	155
		1250	−50	280	35	225	12,500	10	200
		2000	−90	340	30	180	3,200	10	265
HK-54	5.0	1500	−45	300	40	198	16,800	5.0	200
		2000	−70	360	24	180	36,000	6.0	260
		2500	−85	360	20	150	40,000	5.0	275
HY51Z	7.5	850	0	148	48	300	5,000	Note 9	160
		1000	0	170	60	350	6,000	"	260
		1250	0	155	90	300	10,000	"	285

TABLE II — CLASS-B MODULATOR DATA — *Continued*

Class-B Tubes (2)	Fil. Volts	Plate Volts	Grid Volts App.	Peak A.F. Grid-to-Grid Voltage	Zero-Sig.[1] Plate Current Ma.	Max.-Sig.[1] Plate Current Ma.[2]	Load Res. Plate-to-Plate Ohms	Max.-Sig. Driving Power Watts[3]	Max.-Sig.[1] Power Output Watts[3]
203-Z	10	1000	0	206	50	350	6,200	6.5	230
		1250	− 4.5	215	60	350	8,000	6.75	300
ZB120	10	1000	0	190	70	310	6,900	5.0	200
		1250	0	180	95	300	9,000	4.0	245
		1500	− 9	196	60	296	11,200	5.0	300
8005	10	1250	−55	290	40	320	8,000	4.0	250
		1500[6]	−80	310	40	310	2,500	4.0	300
HF100	10 to 11	1500	−52	264	50	270	12,000	2.0	260
		1750	−62	324	40	270	16,000	9.0	350
805 RK57	10	1250	0	235	148	400	6,700	6.0	300
		1500	−16	280	84	400	8,200	7.0	370
828[11]	10	1700	−120	240	50	248	16,200	0	300
		2000	−120	240	50	270	18,300	0	385
75T	5.0	1000	——	——	——	——	6,800	——	200
		1500	——	——	——	——	10,000	——	300
		2000	——	——	——	——	12,500	——	400
8003	10	1350	−100	480	40	490	6,000	10.5	460
100TH	5.0 to 5.1	2000 to 3000	Bias adjusted for maximum rated plate dissipation under no-signal conditions. Zero bias up to 1250 v. plate				16,000 22,000 30,000	May be driven by push-pull 6L6's	380 460 500
HD203-A	10	1500	−40	——	36	425	8,000	Note 12	400
		1750	−67	——	36	425	9,000		500
HK-254	5.0	2000	−65	400	50	260	16,000	7.0	328
		2500	−80	420	50	248	22,000	7.0	418
		3000	−100	456	40	240	30,000	7.0	520
810	10	1500	−30	345	80	500	6,600	12	510
1627	5.0	2000	−50	345	60	420	11,000	10	590

[1] Values are for both tubes.
[2] Sinusoidal signal values; speech values are approximately one-half for tubes biased to approximate cut-off and 80% for zero-bias tubes.
[3] Values do not include transformer losses. Somewhat higher power is required of the driver to supply losses and provide good regulation. Input transformer ratios must be chosen to supply required power at specified grid-to-grid voltage with ample reserve for losses and low distortion levels. Driver stage should have good regulation.
[4] Dual tube. Values are for one tube, both sections.
[5] Instant-heating filament type.
[6] Intermittent amateur and commercial service rating.
[7] Beam tube. Class AB_2. Screen voltage: 300.
[8] Beam tube. Class AB_2. Screen voltage: 125 at 32 ma.
[9] Driver: one or two 45's at 275 volts, self-biased (−55 volts).
[10] Beam Tube. Class AB_2. Screen voltage: 300 at 10 ma. Effective grid circuit resistance should not exceed 500 ohms.
[11] Pentode. Class AB_2. Suppressor voltage: 60 at 9 ma. Screen voltage: 750, 4/43 ma. at 1700 plate volts, 2/60 ma. at 2000.
[12] Can be driven by a pair of 2A3's in push-pull Class AB at 300 volts with fixed bias.

The amount of compression is controlled by means of potentiometer R_{20} in the grid circuit of the 6SQ7. A switch, S_1, is provided to short-circuit the rectified output of the compressor when normal amplification is required.

The construction of the amplifier resembles that of the amplifier of Fig. 1301, the tubes and output transformer being mounted on the rear edge of a 17 by 4 by 3-inch chassis to save panel height in relay-rack mounting. Looking at the amplifier from the front, the 6J7 first amplifier is in the upper left corner with the 6L7 to its right. The 6SQ7 is below the 6L7. The 6N7 is followed by the output transformer, the latter being in the middle of the chassis to distribute the weight evenly. The 2A3's and the power and output terminals are at the right.

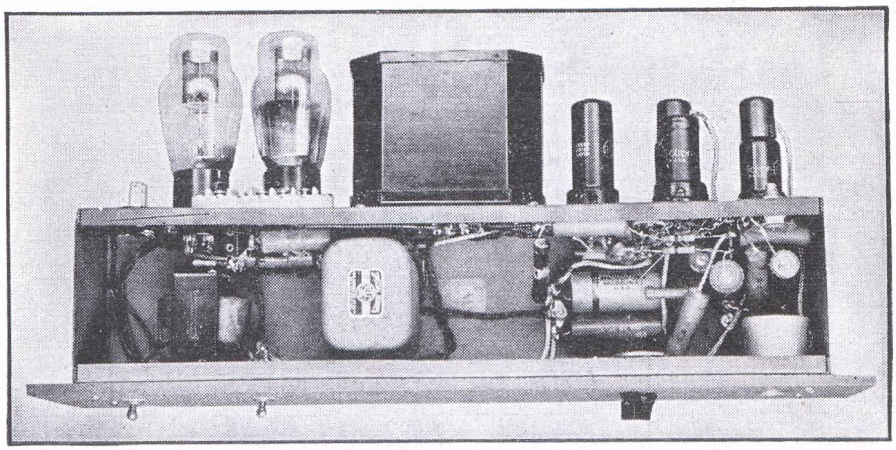

Fig. 1315 — Bottom view of the 2A3 speech amplifier.

In the underneath view, the input circuit is at the left, the grid resistor and connector socket being shielded by the National JS-1 jack shield. The lead to the 6J7 grid is shielded,

as are also the top caps of this tube and the 6L7. The compressor control, R_{20}, is mounted beside the 6J7 and is screwdriver adjusted; a midget control should be used since the space is rather limited. The other parts are mounted as close as possible to the points in the circuit to which they connect. The filament transformers should be kept well separated from the wiring in the low-level stages.

Adjustment of the compressor control is rather critical. First set R_{20} at zero and adjust the gain control, R_6, for full modulation with the particular microphone used. Then advance the compressor control until the amplifier just "cuts off" (output decreases to a low value) on peaks; when this point is reached, back off the compressor control until the cut-off effect is gone, but there is an obvious decrease in gain following a peak. Because of the necessity for filtering out the audio component in the rectifier output there is a slight delay (amounting to a fraction of a second) before the decrease in gain "catches up" with the peak. When a satisfactory setting, indicated by good speech quality with a definite reduction in gain on peaks, is secured, advance the gain control, R_6, to give full output with normal operation. Too much compression, indicated by the cut-off effect following each peak, is definitely undesirable, and the object of adjustment of the compressor control is to use as much compression as possible without over-compression.

The amplifier requires a plate supply of 300 volts at 75 ma. A well-filtered condenser-input supply using receiving-type components is suitable; a two-section filter is desirable.

• CLASS-B MODULATORS

Class-B modulator circuits are practically identical no matter what the power output of the modulator. The diagrams of Fig. 1316 therefore will serve for any modulator of this type that the amateur may elect to build. The triode circuit is given at A, and the circuit for tetrodes at B. When small tubes with indirectly heated cathodes are used, the cathode should be connected to ground.

Design considerations for Class-B stages are

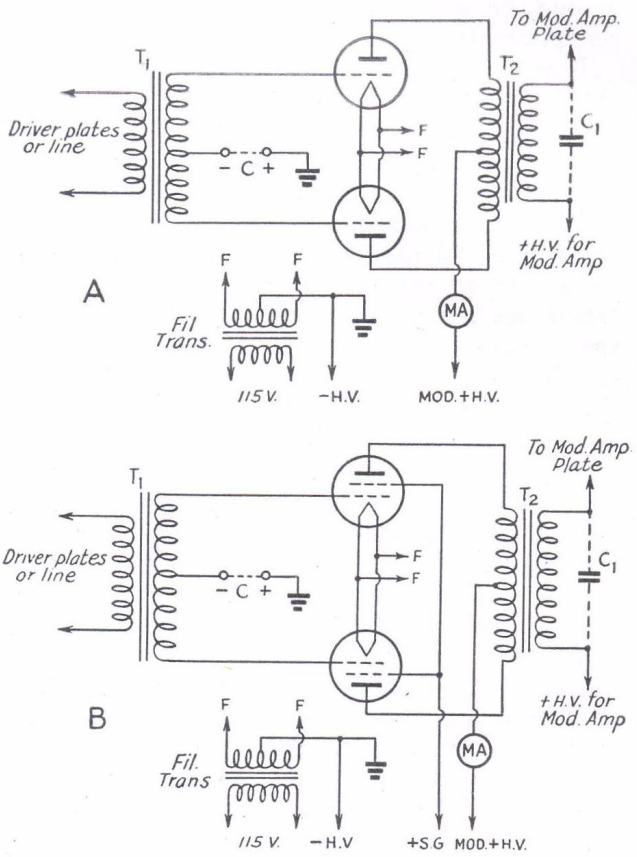

Fig. 1316 — **Class-B modulator circuit diagrams. Circuit considerations are discussed in the text.**

discussed in Chapter 5, and data on the performance of various tubes suitable for the purpose are given in the accompanying tables. Once the requisite audio power output has been determined, and a pair of tubes capable of giving that output selected, an output transformer may be secured which will permit matching the rated modulator load impedance to the modulating impedance of the r.f. amplifier, and similarly, a driver transformer selected which will couple the driver stage to the Class-B grids properly.

The plate power supply for the modulator should have good voltage regulation and should be well filtered. It is particularly important, in the case of a tetrode Class-B stage, that the screen supply have excellent regulation to prevent distortion. The screen voltage

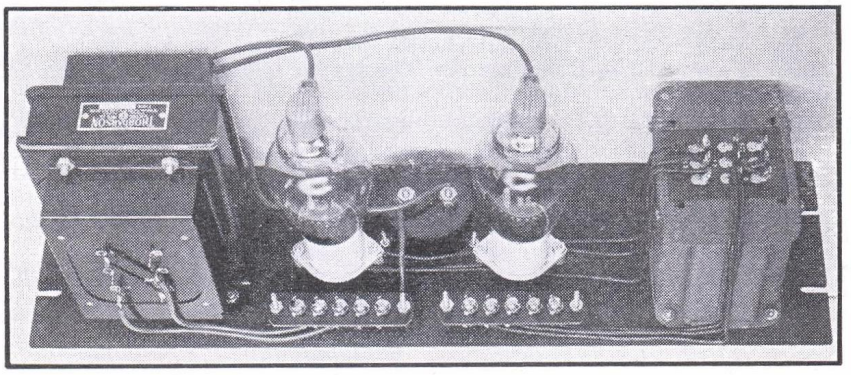

Fig. 1317 — **Chassis-less construction for a low-power Class-B modulator. Small tubes and transformers capable of an audio output of the order of 100 watts may be supported directly from the panel.**

should be set as exactly as possible to the recommended value.

In estimating the output of the modulator, it should be remembered that the figures given in the tables are tube output only, and do not include output transformer losses. The efficiency of the output transformer will vary with its construction, and may be assumed to be in the vicinity of 80 per cent for the less expensive units and somewhat higher for higher-priced transformers. To be adequate for modulating the transmitter, therefore, the modulator should have a theoretical power capability about 25 per cent greater than the actual power needed for modulation.

The input transformer, T_1, may couple directly between the driver tube and the modulator grids or may be designed to work from a low-impedance (200- or 500-ohm) line. In the latter case a tube-to-line output transformer must be used at the driver stage. This type of coupling is recommended only when the driver must be at a considerable distance from the modulator, because the second transformer not only introduces additional losses but also further impairs the voltage regulation.

When "C" bias is required for the modulator, the bias source must have very low resistance. Batteries are the most suitable source of bias. In cases where the voltage values are right, regulator tubes such as the VR-75, VR-105, etc., may be connected across a tap on an a.c. bias supply and will hold the bias voltage steady under grid-current conditions. Generally, however, zero-bias modulator tubes are preferable not only because no bias supply is required but also because the loading on the driver stage is less variable and driver distortion is consequently reduced.

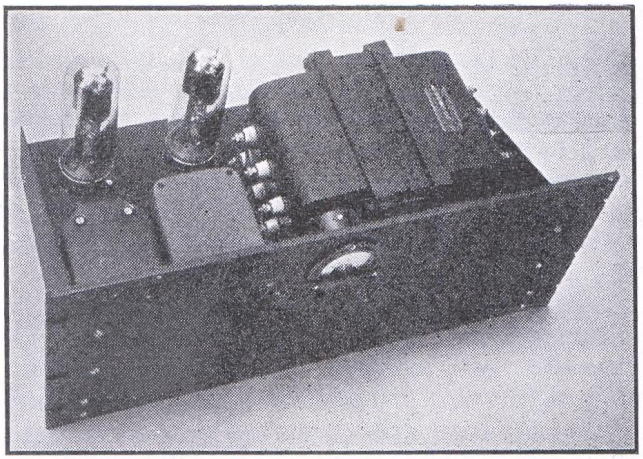

Fig. 1319 — A chassis arrangement for a higher-power Class-B modulator. This unit has a filament transformer for the tubes mounted on the chassis, as well as the input and output transformers. In cases where the input transformer is included with the speech amplifier, less chassis space is needed. The tubes are placed to the rear where ventilation is good.

The plate milliammeter is provided with a small plate over the adjusting screw to prevent touching the screw accidentally. A Presdwood panel was used for this modulator; with metal panels the meter should be mounted behind glass on a well-insulated mount (the meter insulation is not intended for voltages greater than a few hundred) or else should be connected in the filament center-tap rather than in the positive high-voltage lead.

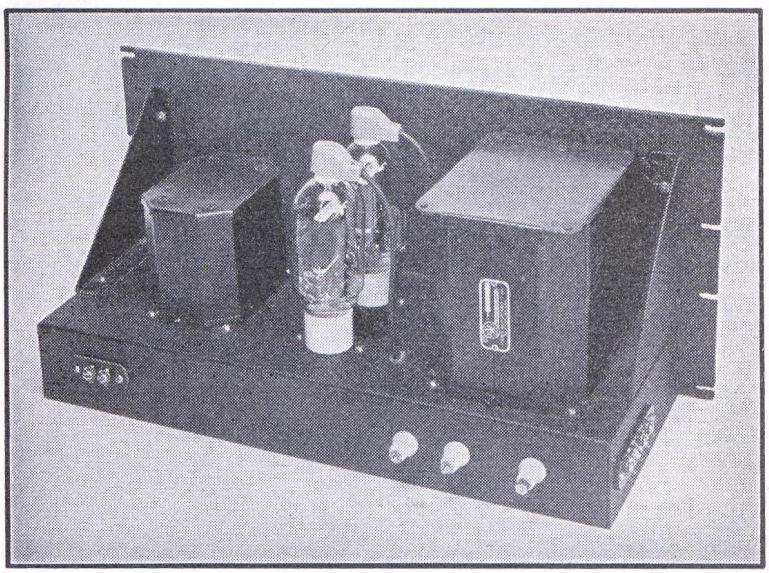

Fig. 1318 — A conventional chassis arrangement for low and medium power Class-B modulators. The layout follows the circuit diagram.

Condenser C_1 in these diagrams will give a "tone-control" effect and filter off high-frequency side-bands (splatter) caused by distortion in the modulator or preceding speech-amplifier stages. Values in the neighborhood of 0.002 to 0.005 μfd. are suitable. The voltage rating should be adequate for the peak voltage across the transformer secondary. The plate by-pass condenser in the modulated amplifier will serve the same purpose.

The various photographs illustrate different types of construction which may be used for Class-B modulators of various power outputs. Placement of parts is not critical.

CHAPTER FOURTEEN

U. H. F. Receivers

IN ESSENTIAL principles, modern receiving equipment for the 28- and 56-Mc. bands does not differ from that used on lower frequencies. In view of the higher frequency there are, of course, certain constructional precautions which must be taken to insure good performance. The 28-Mc. band serves as the meeting ground between those ordinarily termed "communications frequencies" and the ultra-highs, and it will be found that most of the receivers described in Chapter Eleven are capable of working on 28 Mc. In this chapter will be presented receivers and converters capable of good performance on 56 Mc. and higher.

Present regulations require that transmitters working on all frequencies below 60 Mc. must meet similar requirements respecting stability of frequency and, when amplitude modulation is used, freedom from frequency modulation. It is thus possible to use receivers for 56 Mc. a.m. reception having the same selectivity as those designed for the lower frequencies. This order of selectivity is not only possible but desirable, since it makes possible a considerable increase in the number of transmitters which can work in the band without interference, as compared to broad-band receivers. Also, high selectivity greatly improves the signal-to-noise ratio, both in the receiver itself and in the response to external noise. This means that the effective sensitivity of the receiver can be considerably higher than is possible with non-selective receivers. Receivers for f.m. signals are usually designed with less selectivity so that they can accommodate the full swing of the transmitter but, at least for 28- and 56-Mc. f.m. reception, the h.f. oscillator should be as stable as in a narrow-band a.m. receiver.

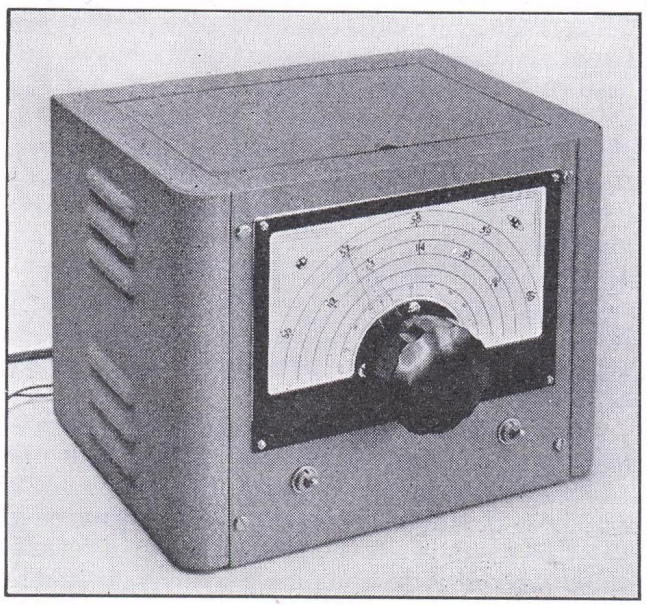

Fig. 1401 — This 2½- and 5-meter converter, complete with power supply, is mounted in an 8-by-8-by-10 cabinet. Plug-in coils give bandspread coverage of the 56- and 112-Mc. bands.

The superheterodyne type of receiver is used almost universally on frequencies below 60 Mc., because it is the only type of receiver that fulfills the above requirements for stability. A superheterodyne for a.m. reception and one for f.m. reception differ only in the i.f. amplifier and second detector, so the "converter" or high-frequency portion of the superheterodyne can be used for either a.m. or f.m. reception. Although superheterodynes can be built for 112-Mc. reception, the superregenerative type of receiver is much more widely used, and above 116 Mc. it is used almost exclusively. The superregenerative receiver has the advantage of low cost and good sensitivity, although its selectivity does not compare with the superheterodyne type of receiver.

A superheterodyne receiver for 56-Mc. work should use a fairly high intermediate frequency so that image response and oscillator "pulling" will be reduced. At 56 Mc., for example, a difference between signal and image frequencies of 900 kc. (the difference when the i.f. is 450 kc.) is a very small percentage of the signal frequency, consequently the response of the r.f. circuits to the image frequency is very nearly as great as to the desired signal frequency. To get discrimination against the image equivalent to that obtained at 3.5 Mc. with a 450-kc. i.f. would require for 56 Mc. an i.f. 16 times as high, or about 7 Mc. if the circuit Qs were the same in both cases. However, the Q of a tuned circuit at 56 Mc. is not as high as at the lower frequencies, chiefly because the tube loading of the circuit is considerably greater. As a result, still higher intermediate frequencies are desirable, and a practical compromise is reached at an i.f. of about 10 Mc.

Since high selectivity cannot be obtained with a reasonable number of circuits at 10 Mc.,

the double superhet principle is commonly employed. The 10-Mc. frequency is changed to an i.f. of the order of 450 kc. by a second oscillator-mixer combination. Thus the receiver has two intermediate frequencies, at both of which amplification takes place before the signal is finally rectified and changed to audio frequency.

Very few amateurs build complete 56-Mc. superhet receivers along these lines. General practice is to use a conventional superhet receiver to handle the 10-Mc. output of a simple frequency-converter. Thus a regular communications-type receiver — or even an all-wave broadcast receiver — can be used with excellent effect on 56 Mc. with the addition of a relatively simple and inexpensive "converter." Since most amateurs have communications receivers, the construction of a good superhet for 56 Mc. is a relatively simple matter.

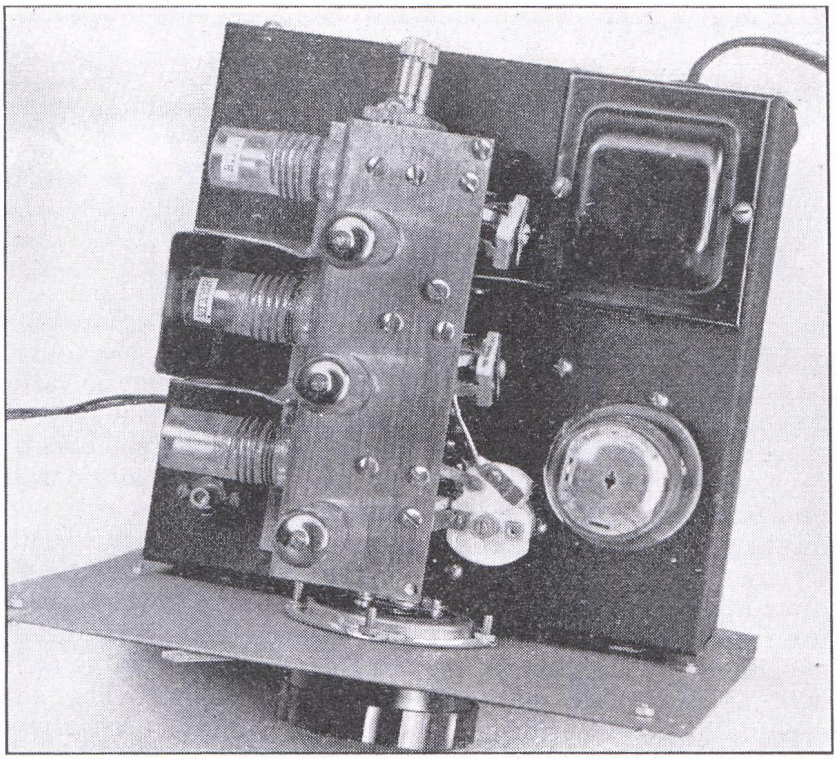

Fig. 1402 — A top view, showing arrangement of tubes and coils. The shaft projecting through the main chassis at the lower left is the i.f. transformer tuning control. The power transformer is sub-mounted so it does not interfere with adjustment of the r.f. trimmer.

From a practical aspect, superregenerative receivers may be divided into two general types. In the first the quenching voltage is developed by the detector tube itself — so-called "self-quenched" detectors. In the second, a separate oscillator tube is used to generate the quench voltage. The self-quenched receivers have found wide favor in amateur work. The simpler types are particularly suited for portable equipment where the apparatus must be kept as simple as possible. Many amateurs have "pet" circuits which are claimed to be superior to all others, but the probability is that the arrangement of their particular circuit has led to the use of correct operating conditions. Time spent in minor adjustment of values will usually result in a smooth-working receiver free from howling and irregular performance that is well worth the effort.

• U.H.F. CONVERTERS

If the amateur already has a communications receiver, or even a fairly decent all-wave b.c. set capable of tuning to 5 or 10 Mc., there is little or no need for building a special u.h.f. receiver, particularly for 56 Mc. It is much easier to build a converter and work the converter into the already-existing receiver. The output transformer of the converter is tuned to the same frequency as the receiver (5 or 10 Mc.) and the signal is coupled through a low-impedance line to the input of the receiver in much the same manner that link coupling is used in a transmitter. All of the tuning is done with the converter, and the gain is adjusted to a suitable level by means of the gain control on the receiver into which the converter is working.

• A HIGH-PERFORMANCE CONVERTER FOR 56 AND 112 MC.

The converter shown in Figs. 1401, 1402, 1403, 1404 and 1405 uses the new 9000 series tubes which are quite similar electrically to the "acorn" tubes but which are somewhat easier to handle. As can be seen from the diagram in Fig. 1403, a 9001 r.f. stage is transformer-coupled to a 9001 mixer. The h.f. oscillator is a 9002 and it is capacity-coupled to the mixer grid through C_{15}. The output circuit (C_{14}, C_{16} and L_7) is tuned to 10.2 Mc., approximately, although the converter could be made to work into some other i.f. with suitable changes in the output circuit and the oscillator coil, L_5 — L_6, constants.

As indicated in the diagram, the screen and plate by-pass condensers are returned to one cathode lead (the one to which the suppressor is connected) while the other lead is grounded through a condenser to serve as the grid return. In the mixer plate circuit a low-drift mica condenser, C_{14}, is connected directly from plate to cathode to short-circuit the signal-frequency component in the plate circuit. This condenser is of course part of the i.f. tuned circuit and its

capacity must be taken into account in calculating the inductance required at L_7.

The mixer and r.f. tuned circuits are made as low-C as is possible under the circumstances; the use of plug-in coils unavoidably introduces some stray capacity that would not be present if the circuits were made to operate on one frequency only. The tuning condensers are cut down to two plates each, and have just about enough capacity range to cover the 56-Mc. band with a little to spare. The trimmers are mica units operated at nearly minimum capacity so that the mica is a negligible factor in the operation of the condenser; for all practical purposes the dielectric is purely air. The L/C ratio compares favorably with those commonly attained with acorn receivers, even though the coils may look small.

The oscillator circuit is of the grid tickler type, with the tuned tank in the plate circuit. The tuned circuit is made higher-C than the signal-frequency circuits to improve the stability, and as a consequence somewhat more tuning capacity is needed to cover the requisite frequency range. The tuning condenser is a 15-$\mu\mu$fd. unit cut down to three plates, and the trimmer is a 25-$\mu\mu$fd. air-dielectric job. Oscillator and mixer are coupled through a small condenser, homemade, tailored to give suitable injection of oscillator voltage into the mixer grid circuit.

The oscillator is tuned to the low side of the signal frequency on both 56 and 112 Mc. to give slightly more stability to the oscillator. A VR-105 in the power supply adds further to the stability of the oscillator.

The power supply part of the circuit needs no comment except to explain that a separate filament transformer was used because no small plate transformer of the size used was available with a 6.3-volt heater winding. The filament power could just as readily be taken from a 6.3-volt winding on the plate transformer if such is available.

The "chassis" on which the converter is assembled is a piece of sheet copper, somewhat

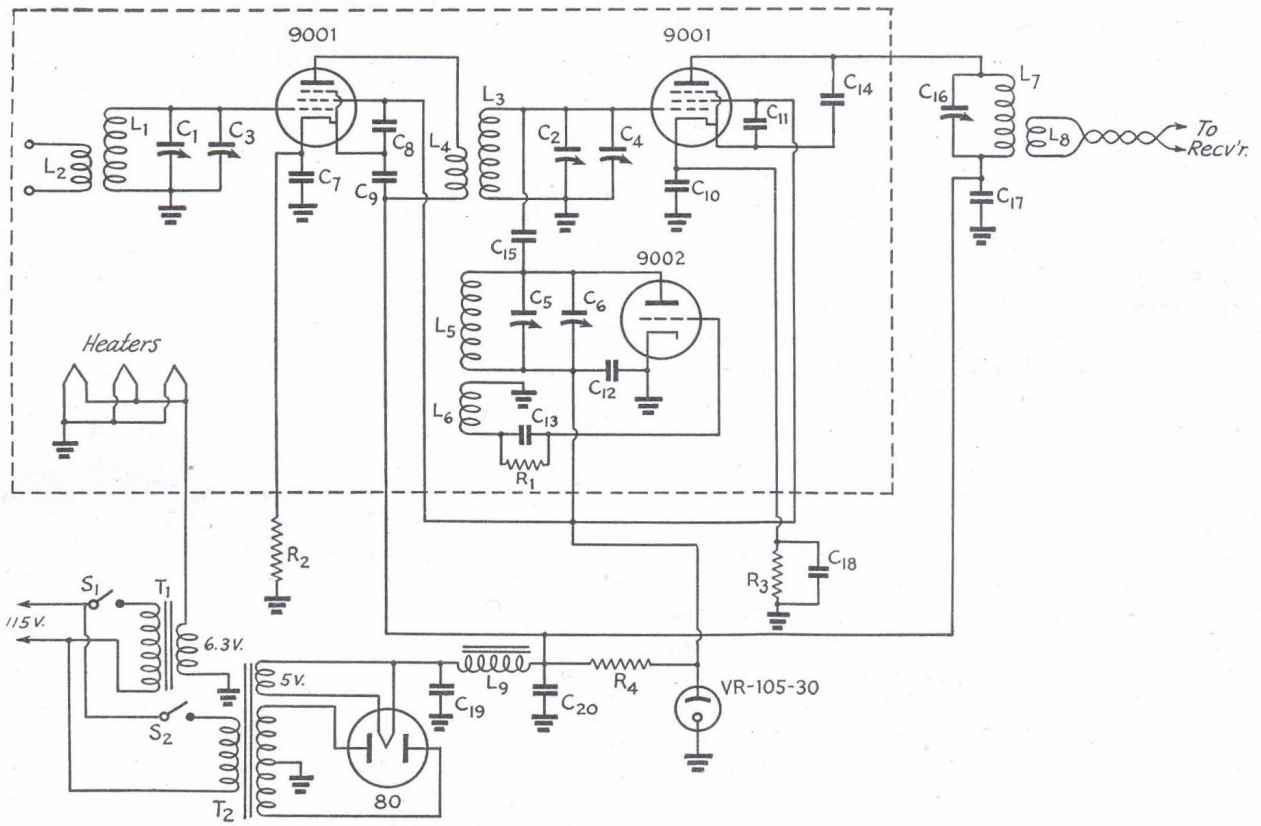

Fig. 1403 — Circuit diagram of the 56–112-Mc. converter.

C_1, C_2 — Approx. 5-$\mu\mu$fd. variable (National UM-15 cut down to 2 plates).
C_3, C_4 — 3-30-$\mu\mu$fd. trimmer (National M-30).
C_5 — Approx. 8-$\mu\mu$fd. variable (National UM-15 cut down to 3 plates).
C_6 — 25-$\mu\mu$fd. air trimmer (Hammarlund APC-25).
C_7–C_{12}, inc. — 500 $\mu\mu$fd. midget mica.
C_{13} — 100-$\mu\mu$fd. mica.
C_{14} — 50-$\mu\mu$fd. silvered mica.
C_{15} — Osc.-mixer coupling condenser (see text).
C_{16} — 25-$\mu\mu$fd. air trimmer (Hammarlund APC-25).
C_{17} — 0.002-μfd. mica.
C_{18} — 0.01-μfd. paper.
C_{19}, C_{20} — 8-μfd. tubular electrolytic.
R_1 — 50,000 ohms, ½-watt.
R_2 — 1200 ohms, ½-watt.
R_3 — 10,000 ohms, ½-watt.
R_4 — 6000 ohms, 10-watt.
L_1–L_6, inc. — See coil table.
L_7 — 18 turns No. 22 enam., close-wound on ⅝" diam. form.
L_8 — 8 turns similar to L_7, at ground end of L_7.
L_9 — Filter choke, 8 henrys, 55 ma. (Thordarson T-14C62).
T_1 — Filament transformer, 6.3 v., 1.2 amp. (Stancor P-6134).
T_2 — Power transformer, 560 v. c.t., 30 ma. (Thordarson T-60R49).
S_1, S_2 — S.p.s.t. toggle.

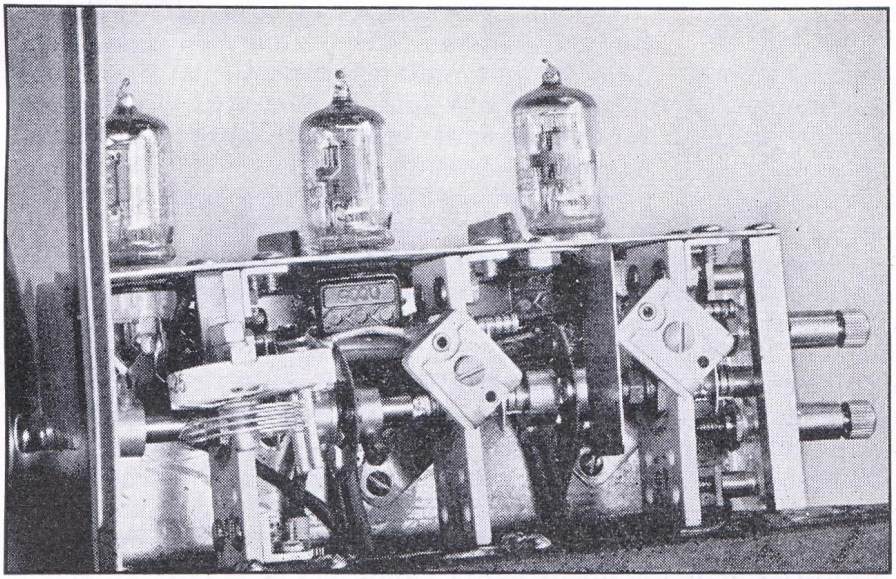

Fig. 1404 — **Inside the converter unit, showing the arrangement of tuning condensers. The layout is quite compact, every effort having been made to keep leads as short as possible.**

less than 1/16 inch thick, 5½ inches long, and bent as shown in the photographs. The width on top is 1¾ inches, the height 2¼ inches, and the bottom lip, for fastening to the main chassis, is ¾ inch wide. The tubes are mounted on top near the bent edge, allowing just enough room to insert the socket mounting ring, and are 1¾ inches apart, center to center, with the r.f. tube 1⅜ inch in from the rear edge. The coil sockets are mounted on the side, ¾ inch down from the top, so that the connections between socket prongs and the tuning condenser terminals can be made directly, without additional wires. The spacing is such that the lead from the stator connection to the grid prong on the tube socket is only about ¼ inch long.

In building an assembly of this type, it is a practical necessity to do all the wiring before the tuning condensers are mounted. The inside view gives some idea of the arrangement of by-pass condensers; the chief consideration in placing them was to eliminate leads, insofar as possible. Each stage has its own ground point, which in the case of the r.f. and mixer stages is on the side of the chassis directly below the tube socket and the length of the cathode by-pass condenser away from it. The screws which hold the ground lugs in place are threaded into the copper, and on the outside also help support the vertical interstage shields. The oscillator ground is also on the side, but close to the cathode pin, which is grounded directly; the plate by-pass condenser, C_{13}, is brought to the same point. In the other two stages the ground leads from the tuned circuits are ⅜-inch wide strips of thin copper, this being used in preference to wire to reduce the inductance.

For electrostatic shielding between the r.f. and mixer stages two baffle plates are used. One small plate, not visible in the photograph, is fastened to the side of the chassis directly opposite the tube socket and is soldered to the shield cylinder in the center of the socket. It effectively shields off the grid wiring from the plate circuit and is about an inch square. Since it crosses the tube socket and should get as close to it as possible, care must be taken to see that the socket prongs are bent away so they cannot touch it. The other shield is almost all on the outside, and is used chiefly to prevent electrostatic coupling between the r.f. and mixer trimmer condensers, which are mounted on the sides of the tuning condensers. A transverse shield plate completely boxing off the two stages would be better, but is an awkward job mechanically in view of the necessity for assembling the condenser gang.

No shielding is required between the mixer and oscillator; in fact, the stray coupling is too small to give good frequency conversion. The trimmer condenser is supported from the top of the chassis by a small bracket made from brass strip, bent to such size that the rotor connection of the trimmer comes right at the rotor spring on the tuning condenser, where the two are soldered together. A small strip of copper is soldered between the two sets of stator plates, using the soldered mounting on top of the trimmer for its connection. The coupling condenser is a small piece of copper bolted to the trimmer end plate and bent to face the other soldered mounting. The separation is about a sixteenth of an inch.

The vertical shield plates between the coils are 2⅜ by 1⅜, with bent-over edges to fasten to the side of the chassis. To complete the magnetic shielding the end of the mixer coil must be boxed in, which is done by a piece of copper in the shape of a shallow U, held in place simply by making it fit tightly between the vertical shields. This piece must be removable for changing the mixer coil.

Care must be used in making soldered connections on the polystyrene sockets and forms, since the material will soften with the application of heat. Have the connections well cleaned before attempting to solder, and hold the iron on the lugs just long enough to get a good joint and no longer.

The bottom view shows the arrangement of the power supply and the i.f. output cir-

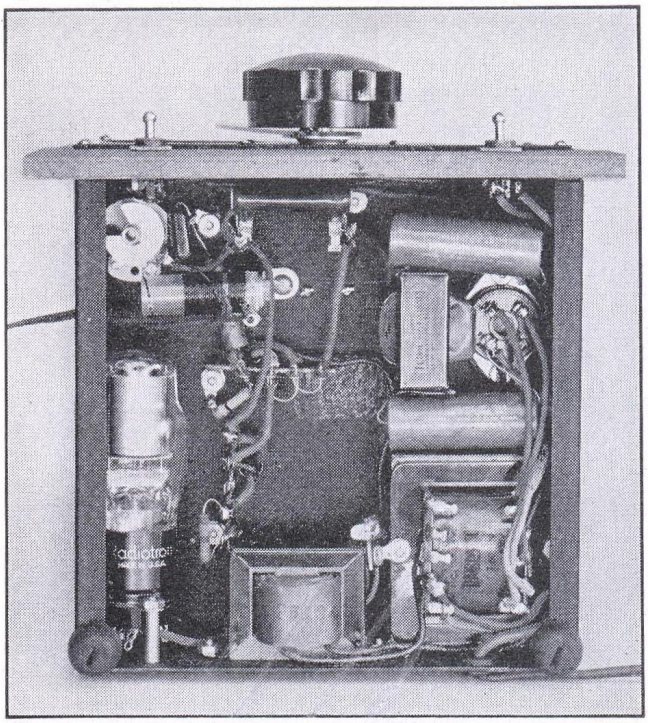

Fig. 1405 — **The plate power supply occupies the right-hand section of the chassis in this bottom view. The i.f. output section is in the upper left corner.**

cuit. The transformer for the latter is wound on a National PRE-3 polystyrene form. It is mounted on a bracket to keep it about equally spaced from the top of the chassis and the bottom of the cabinet in which the chassis fits. The various a.c. and d.c. supply connections from the converter are brought to lug strips as shown; the cathode resistors for the r.f. and mixer stages are mounted here where they are readily accessible for trying different values. The power supply parts are arranged to fit in the remaining space, although the power transformer is probably in about the only spot where it could be placed without interfering with anything on top. The rubber feet at the rear of the chassis are used to give a little space for circulation of air, since a fair amount of heat is developed by the transformers and regulator tube.

COIL DATA

Band	Coil	No. of Turns	Wire Size	Length Inches	Remarks
[illegible]	L_1	$11\frac{11}{16}$	18	$\frac{15}{16}$	
	L_2	$1\frac{1}{8}$	24		$\frac{1}{8}$" from L_1
	L_3	$11\frac{11}{16}$	18	$\frac{15}{16}$	
	L_4	$1\frac{7}{8}$	24	$\frac{1}{8}$	$\frac{1}{8}$" from L_3
	L_5	$\frac{3}{4}$	18		
	L_6	$1\frac{1}{8}$	24		$\frac{1}{8}$" from L_5
56 Mc.	L_1	$4\frac{5}{8}$	18	$\frac{3}{8}$	
	L_2	$2\frac{7}{8}$	24	$\frac{1}{8}$	$\frac{1}{8}$" from L_1
	L_3	$4\frac{1}{2}$	18	$\frac{7}{16}$	
	L_4	$2\frac{7}{8}$	24	$\frac{1}{8}$	$\frac{1}{8}$" from L_3
	L_5	$3\frac{5}{8}$	18	$\frac{3}{8}$	
	L_6	$2\frac{7}{8}$	24	$\frac{5}{32}$	$\frac{1}{8}$" from L_5

All coils wound on ¾-inch diameter forms (Amphenol type 24-5H, 5 prong).

A few mechanical points should be given consideration in assembling the tuning condensers. The screw-on shafts are likely to come loose with use unless they can be anchored in some way, and soldering is about the simplest scheme. The heat tends to cause the lubricant to run out of the shaft bearing, however. Another important point is to get the shafts of the three condensers lined up accurately so that the rotors turn freely. The chief thing is that any twist, particularly at the oscillator condenser shaft, will tend to bend the rotor out of line slightly with respect to the stator, and since the twisting depends upon the direction of rotation, this means that the assembly will have bad backlash. For the same reason the dial must be lined up accurately with the condenser shafts. It is hard to give any but general directions; line up the shafts as accurately as possible, and fix the stators where they want to come on the chassis, using shims if necessary.

Alignment of the converter will involve some cut and try, using the coil specifications given in the table as a guide. It is best to line up the 5-meter coils first, before tackling the 2½-meter band. The first step is to make the oscillator cover the proper range, the object being to spread the band over about 75% of the dial scale. With the 10.2-Mc. i.f., the oscillator range, to cover 56 to 60 Mc., will be from 45.8 to 49.8 Mc., and this may be checked on another receiver, if available. If not, probably it will be necessary to use actual signals in the band for the purpose, which also will involve having at least the mixer hooked up. With the circuit specifications given, the oscillator padding condenser should be set at about half scale. The inductance of L_5 may be adjusted by closing up or opening out the turn spacing, which can be done within limits without moving the ends of the coil. Once the right range is secured the turns should be cemented in place. An alternative method of adjusting the inductance is to make the coil slightly large in the first place and then cut it down with a shorted turn of wire which may be slid along the coil form. A limited range of inductance variation can be secured by this method.

The oscillator tickler, L_6, should be adjusted to give stable oscillation without squegging. Squegging is evidenced by a whole series of signals instead of one, and can be cured by reducing the feedback, either by using a smaller number of tickler turns or by moving the tickler farther away from the plate coil. Incidentally, the oscillator should have a good steady d.c. note, if means are available for listening to it in another receiver. For this check to mean

anything, the receiver used also should introduce no modulation on incoming signals.

Once the oscillator range is set, the mixer should be lined up to match. To do this, have the r.f. tube in its socket, but connect a resistor of a few hundred ohms from its grid to ground instead of using L_1. The mixer primary, L_4, must be in place, since it will have some effect on the tuning range of L_3C_2. Connect the r.f. output leads to the doublet posts on the communications receiver, set the latter to 10.2-Mc., and adjust C_{16} for maximum hiss, with the oscillator tube out of its socket. Then replace the tube and with the oscillator set for 56 Mc., adjust the trimmer, C_4, for maximum hiss; reset the oscillator to 60 Mc. and readjust C_4. If more capacity is needed at C_4, the inductance of L_3 is too large; if less, L_3 is too small. Make an appropriate small change in the inductance and try again, continuing the process until C_4 peaks at the same setting at both ends of the band. The inductance of L_3 may be adjusted by the means described above.

When this process is finished, C_4 should be well in the air-dielectric portion of its range. Should the movable plate be close to the mica, L_3 is considerably too small. However, this would be accompanied by reduced tuning range on C_2, and it is doubtful if high padding capacity would permit full band coverage.

The r.f. stage is aligned in just the same way as the mixer circuit. First alignment should be with nothing connected to the antenna posts. Should oscillation occur, reduce the size of L_4 until the stage is stable. Some slight trace of regeneration may remain, as indicated by an exaggerated peaking in the r.f. stage, but this will disappear with any sort of antenna load on the r.f. tuned circuit.

The procedure for adjusting the 112-Mc. coils is similar to that described above for 56 Mc. Because of the convenience, it is desirable to adjust the oscillator coil so that the trimmer C_6 does not need resetting when changing bands. (*Bib.* 1.)

• A SIMPLE 56- AND 112-MC. CONVERTER

The converter shown in Figs. 1406, 1407, 1408, 1409, 1410 and 1411 uses a 1232 loktal tube for the mixer and a 7A4 for the h.f. oscillator. Although its sensitivity is not quite as good as that of the converter just described, it affords a simple converter for the u.h.f. range that will prove perfectly satisfactory. By grouping the tuning condenser, coil and tube socket closely together, it is a relatively simple matter to achieve low-enough circuit capacities to work readily on 112 Mc. As can be seen from Fig. 1408, the grid of the 1231 mixer is tapped down on the coil, to reduce the loading on the circuit and obtain a better gain in the

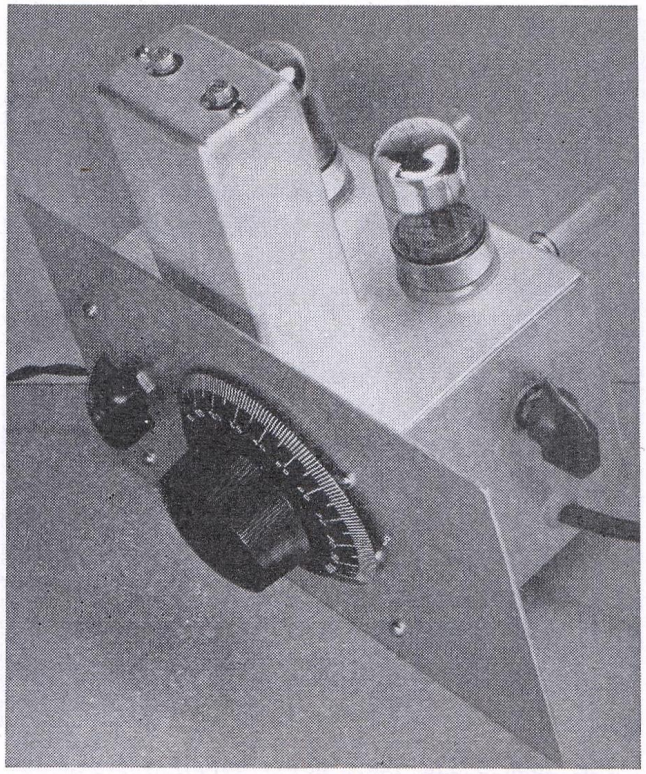

Fig. 1406 — The simple converter uses a 7A4 oscillator and a 1232 mixer. The panel dial is the oscillator tuning dial; the panel knob is the mixer tuning control. The knob on the side adjusts the oscillator band-set condenser.

stage. The plate-tickler circuit is used in the oscillator, so that the cathode can be grounded directly and thus give a minimum of hum to the signal.

The oscillator tuning condenser is a 15-$\mu\mu$fd. condenser from which several plates have been removed, and this is paralleled by a 35-$\mu\mu$fd. band-set condenser. With this type of band-spread system, the converter can be set to the desired frequency band, the mixer condenser turned to the point where the noise is greatest, and then the tuning is all done with the small oscillator condenser. When a signal has been tuned in, the mixer can be peaked again, but it is not usually necessary over the range of the band-spread condenser. The pulling of the oscillator by adjustment of the mixer tuning condenser is very slight because of the loose coupling.

All of the metal is 1/16-inch thick aluminum, but other metals can be substituted if necessary. The panel is 5½ by 8 inches, but it is longer than is absolutely necessary and could be trimmed to be only 6 inches long. The extra length was included to put the dial in the center of the panel and also to provide room for possible future switches for shifting to various i.f. amplifiers. The chassis itself is built from a piece of 5¼-inch wide metal bent to form a 3⅞-inch wide top and 4-inch deep back. A ½-inch lip is bent down from the top to fasten

the chassis to the panel. The two sides are made by forming shallow U's (with ½-inch sides) to fit between the panel and the back of the chassis. A shield is made and fitted under the chassis, making the oscillator compartment 2½ inches wide. This shield mounts the oscillator tuning condenser and also takes the National TPB victron through-bushing which serves as a coupling condenser between oscillator and mixer.

The coil forms are the small ¾-inch diameter Amphenol ones made of polystyrene, and the coil sockets are also of polystyrene. The coil sockets mount simply by drilling a suitable hole and sliding the retainer rings over the sockets. The tube sockets are also made by Amphenol and mount in much the same fashion. For short leads, the oscillator socket should be mounted with the slot towards the rear of the set, and the mixer socket should be mounted with the slot towards the left-hand side of the set.

As mentioned before, the oscillator tuning condenser, C_3, is mounted on the shield partition, and the band-set condenser, C_2, is mounted on the right-hand side of the chassis. The band-set condenser is insulated from the metal by fiber washers so that there is only one ground point to the chassis for the oscillator circuit, that through the oscillator tuning condenser. The mixer tuning condenser, C_1, is mounted on the right-hand side of the chassis and grounds the mixer circuit at that point.

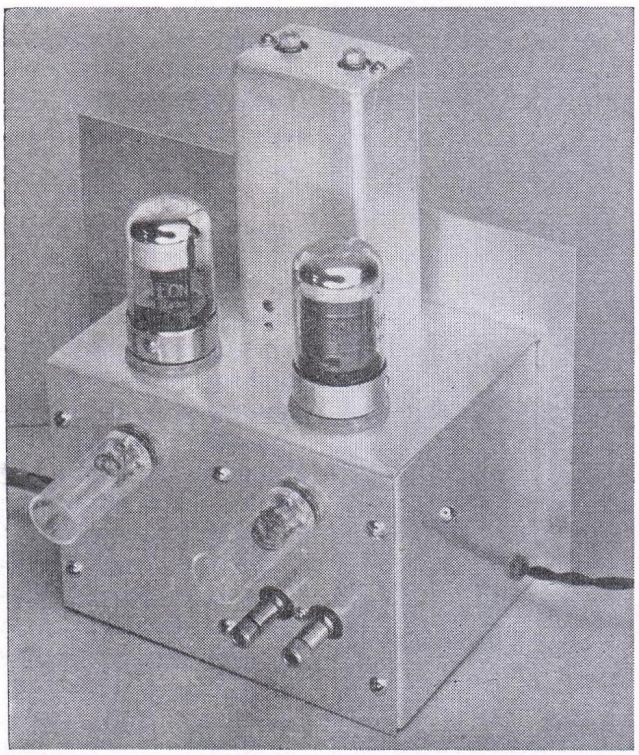

Fig. 1407 — A rear view of the converter shows the two plug-in coils and the antenna terminals. The wire leading off at the left is the battery cable; the twisted pair on the right carries the output to the i.f. amplifier.

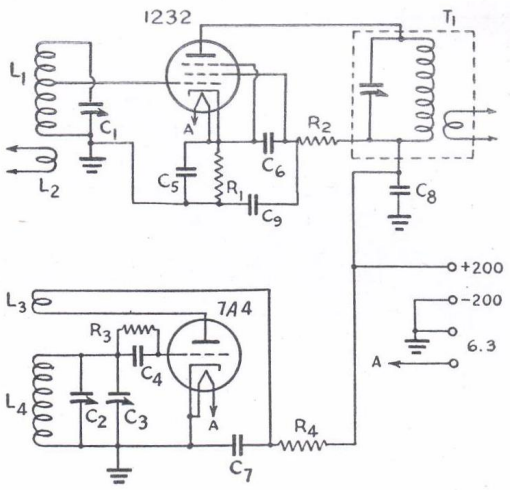

Fig. 1408 — Wiring diagram of the u.h.f. converter.

C_1 — 15-$\mu\mu$fd. midget variable (Hammarlund HF-15).
C_2 — 35-$\mu\mu$fd. midget variable (Hammarlund HF-35).
C_3 — 10-$\mu\mu$fd. midget variable (Hammarlund HF-15 with one stator and one rotor plate removed).
C_4 — 100-$\mu\mu$fd. midget mica.
C_5, C_6, C_7 — 500-$\mu\mu$fd. midget mica.
C_8, C_9 — 0.01-μfd. 600-volt paper.
R_1 — 500 ohms, ½-watt carbon.
R_2 — 125,000 ohms, 1-watt carbon.
R_3 — 20,000 ohms, ½-watt carbon.
R_4 — 10,000 ohms, 1-watt carbon.
T_1 — 3 Mc.: 75 turns No. 30 d.s.c. closewound; coupling coil is 20 turns No. 30 d.s.c. closewound ⅛ inch from ground end of coil.
5 Mc.: 45 turns No. 30 d.s.c. closewound; coupling coil is 14 turns No. 30 d.s.c. closewound ⅛ inch from ground end of coil.
The transformers are built in the Hammarlund ETU units. Both sections of the condenser are used.
L_1 — 112 Mc.: 2¼ turns No. 20 enam., ⅜-inch diam., spaced diam. of wire. Grid tap at ¾ turn from top.
56 Mc.: 4½ turns No. 20 enam., ¾-inch diam., spacewound to occupy ½ inch. Grid tap at 1½ turns from top.
L_2 — 112 Mc.: 3 turns No. 20 enam., ¼-inch diam., closewound one wire diameter below cold end of L_1.
56 Mc.: 3 turns No. 24 enam. closewound ⅛ inch below L_1.
L_3 — 112 Mc.: 1 turn No. 20 enam. ¼-inch diam., 3 wire-diameters below L_4.
56 Mc.: 1½ turns No. 24 enam. closewound ⅛ inch below L_4.
L_4 — 112 Mc.: ⅞ turn No. 20 enam., ⅜-inch diam., 56 Mc.: 1¾ turns No. 20 enam. spaced to occupy ¼ inch.

The oscillator tuning condenser and the mixer tuning condenser are fastened to their respective panel controls through insulated couplings, to avoid duplication of grounds.

One of the mounting screws for the tuning dial also serves to hold the top of the chassis to the panel, and another one holds the partition to the panel.

The panel and sides should be left off until all of the wiring that can be done without them has been finished. Heater leads, ground connections, by-pass condensers, and resistors can all be put in before the sides and panel are

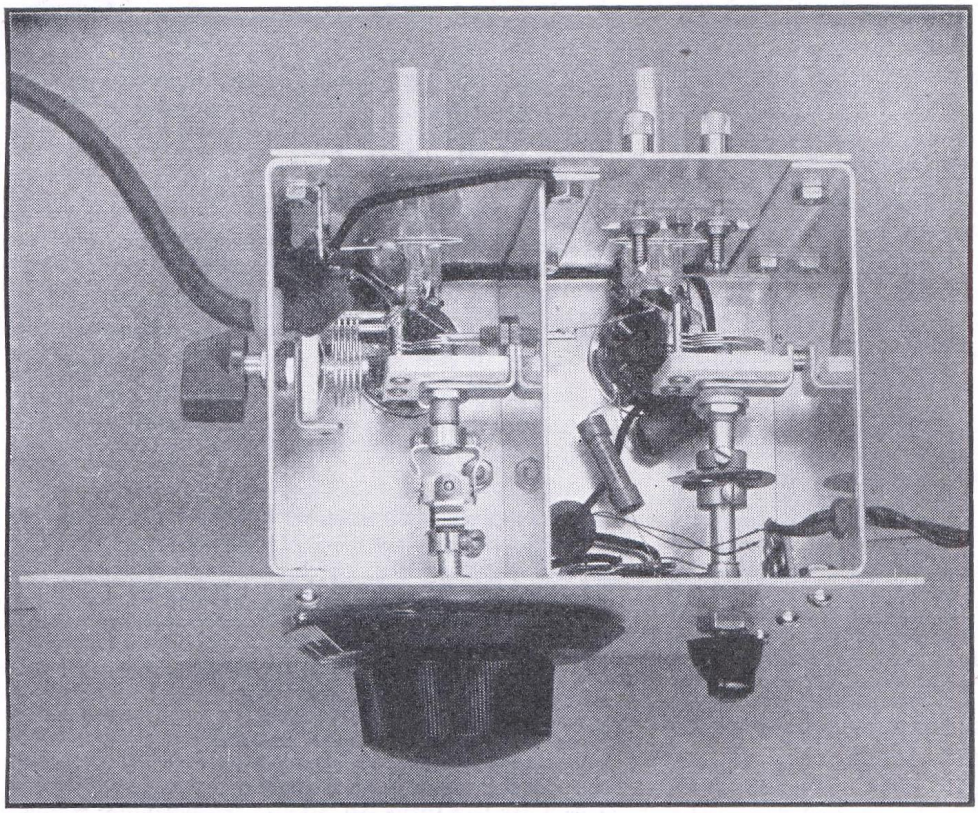

Fig. 1409 — A shot underneath the converter. Note that in the oscillator section (on the left) the band-set and tuning condensers butt into each other for short leads. The band-set condenser is insulated from the side panel by an insulated washer, and the oscillator circuit grounds to the chassis at only one point, through the tuning condenser. The victron through-bushing which serves as coupling between mixer and oscillator can be seen on the partition just above the oscillator tuning condenser. The bushing connects to the 1232 grid on one side and to nothing on the other.

fastened. One should be a bit careful not to hold the soldering iron on the polystyrene coil sockets for any longer than is necessary to start the solder flowing, or else the socket contacts will loosen from the heat's effect on the polystyrene. A small, pointed soldering iron comes in very handy here. A lead is run from the grid of the 1232 to the through-bushing on the partition but no connection is made on the oscillator side, since the capacity between the bushing and the oscillator leads is sufficient for coupling. All r.f. leads and leads from by-pass condensers are kept short and direct.

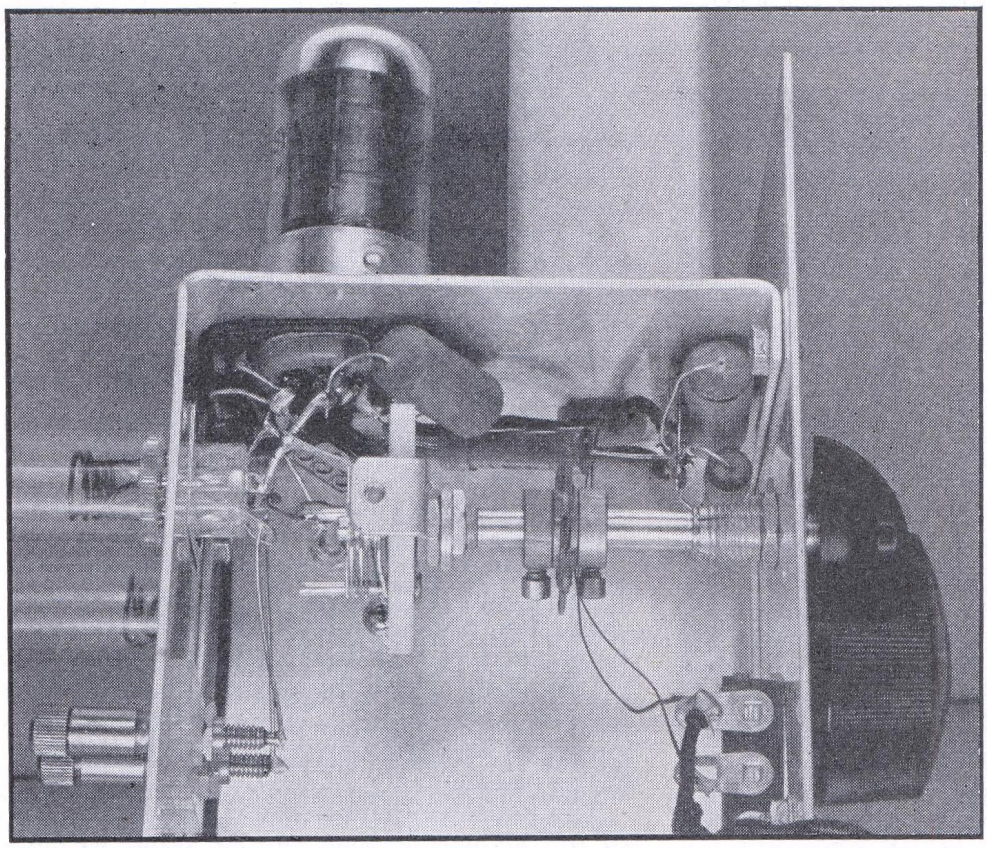

Fig. 1410 — The mixer circuit can be seen when the side panel is removed, giving an idea of the placement of the parts. The tie strip at the lower right takes the output leads from the transformer. The through-bushing can be seen just to the left of the tuning condenser, with a wire from it running to the 1232 grid.

The coil for the 5-meter range is wound in the usual manner on the outside of the coil forms. No trouble should be had in finding the 5-meter amateur band, since the tolerance on this range of coil is fairly wide. The only care necessary is to prevent the pins from loosening up in the forms because of the heat when soldering. The wire should be well cleaned and a spot of flux used on the tip of the pin. No attempt should be

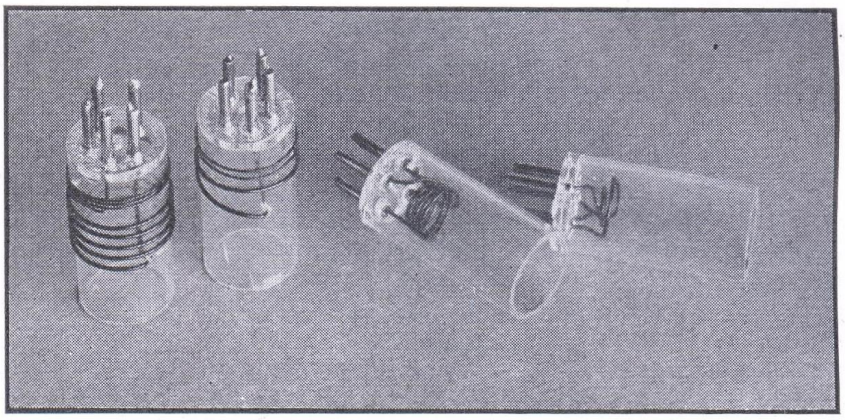

Fig. 1411 — The 112-Mc. coils (right) are self-supporting inside the coil forms, while the 56-Mc. coils are wound in the usual manner.

made to flow solder on the pin and wire, but a drop of solder picked up by the iron can be held against the pin for just an instant, long enough to solder wire and pin together. If the pin loosens up or moves out of place, it can be heated again slightly (by holding the soldering iron against it) and held in the proper position with long-nosed pliers. When the metal (and coil form) cools, it should be as solid as ever. If it isn't, it doesn't matter too much, since the form can still be plugged in the socket without difficulty.

The coils for the 2½-meter range are wound *inside* the coil forms. It is, however, a simple matter to adjust them, since the coil forms can first be sawed through near the base and the coils adjusted by spreading the turns. When the adjustments have been made, the coil form can be fastened together by Duco cement, and there will be no danger of the coil's being injured by handling.

The usual rule must be followed for the oscillator coil, i.e., if both grid and plate coil are wound in the same direction, the grid and plate connections come off opposite ends (in this case the outside ends).

The connections on the oscillator coil, looking at it from the bottom, are (starting with the oddly-spaced pin and going clockwise): plate, ground, B plus, grid and blank. In the same manner, the mixer-coil connections are grid, tuning condenser, antenna, antenna and ground. Both mixer and oscillator coil sockets are mounted with the odd pin at the top.

If the connections have been made correctly and kept short enough, no trouble should be experienced in making the oscillator oscillate in any of the ranges. For the 112-Mc. band, the oscillator band-set condenser will be at minimum capacity, but will set at about mid scale for the other range, varying slightly with the i.f. used.

The converter is coupled into the i.f. amplifier through a low-impedance link, and this requires that the input transformer in the i.f. amplifier be modified by winding a number of turns about the grid coil and connecting the link to this coil. Alternatively a duplicate of the output transformer T_1 can be built and substituted for the first transformer in the i.f. amplifier. If a receiver is used for the i.f. amplifier, the output leads connect to ground and the grid cap of the mixer tube in the receiver, after the regular grid lead has been removed.

Antennas for use with the converter present the same problem that they do with any u.h.f. receiver, and your particular favorite is the one to use. A little experimenting with the antenna coil L_2 may help in giving a better match to the antenna system — the dimensions given are average values that were about right for low-impedance line input.

If signals are weak the trouble probably can be accounted for by too much or too little oscillator voltage reaching the mixer, and this can be adjusted over considerable range by moving the tickler coil L_3 closer to or farther away from L_4. However, the adjustment does not seem to be too critical.

For maximum performance, it is suggested that a stabilized power supply be used with the converter. (*Bib.* 2.)

• A 56-MC. CONVERTER WITH 1852 R.F. AMPLIFIER

The performance of a converter can be improved by equipping it with an r.f. amplifier stage to precede the mixer. The additional amplification provided is seldom necessary with a communications receiver functioning as an i.f. amplifier, but the improvement in both image rejection and signal-to-noise ratio is worth while. A converter with an r.f. amplifier stage is shown in Figs. 1412 and 1414. As the circuit, Fig. 1413, shows, an 1852 is used as the r.f. amplifier or preselector, and a triode-hexode converter tube, the 6K8, is used as a combined mixer and oscillator. The intermediate-frequency is 10 Mc.

The metal chassis measures 1 by 3½ by 7 inches. Shielding between stages is provided by the right-angle partition shown in the photograph. This partition is 2¾ inches high,

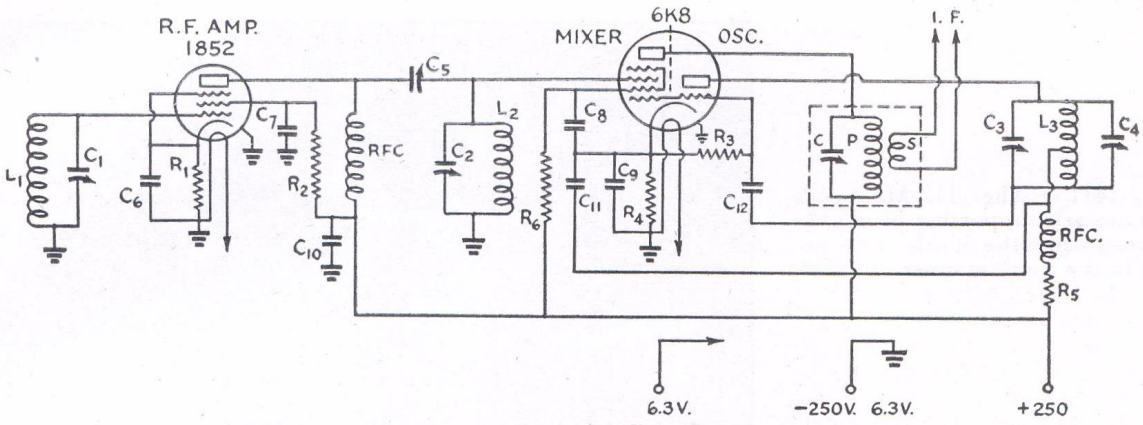

Fig. 1413 — The 1852-6K8 converter circuit.

C_1, C_2 — 15-$\mu\mu$fd. midget variable (National UM-15).
C_3 — Same as C_1 with two rotor and one stator plate removed.
C_4, C_5 — 30-$\mu\mu$fd. compression-type padders.
C_6 to C_9, inc. — 0.005-μfd. mica.
C_{10} — 0.002-μfd. mica.
C_{11} — 250-μfd. mica.
C_{12} — 100-$\mu\mu$fd. mica.
R_1 — 200 ohms, ½-watt.
R_2 — 65,000 ohms, ½-watt.
R_3 — 50,000 ohms, ½-watt.
R_4 — 300 ohms, ½-watt.
R_5 — 20,000 ohms, ½-watt.
R_6 — 20,000 ohms, 2-watt.
RFC — In 1852 plate circuit, 2.5-mh. pie-wound; in oscillator circuit, solenoid type (Ohmite Z-1).
L_1 — 6 turns No. 14, diameter ½ inch, length 1 inch.
L_2 — 6 turns No. 14, diameter ½ inch, length ⅝ inch.
L_3 — 10 turns No. 14, diameter ½ inch, length 1¼ inches, tapped 4th turn from grid end.
I.F. Output Transformer — *P*, 25 turns No. 28 d.s.c. closewound on half-inch form; *S*, 6 turns wound over *P* at bottom; *C*, 35-$\mu\mu$fd. midget variable.

and the side parallel to the front edge of the chassis is 4 inches long. The portion that supports the 6K8 is 2½ inches long. The 6K8 is mounted at the bottom of the shield, with the grid cap facing the left end of the base.

The 1852 grid tuning condenser, C_1, and coil, L_1, are mounted to the rear of the 4-inch section of the shield. The 1852, condenser C_2, and coil L_2 are mounted in front of the partition, with C_2 directly in line with C_1. A hole through the shield permits the two shafts to be connected by a flexible coupling. Both of the coils, and also coil L_3, have their terminals soldered directly to the appropriate condenser lugs.

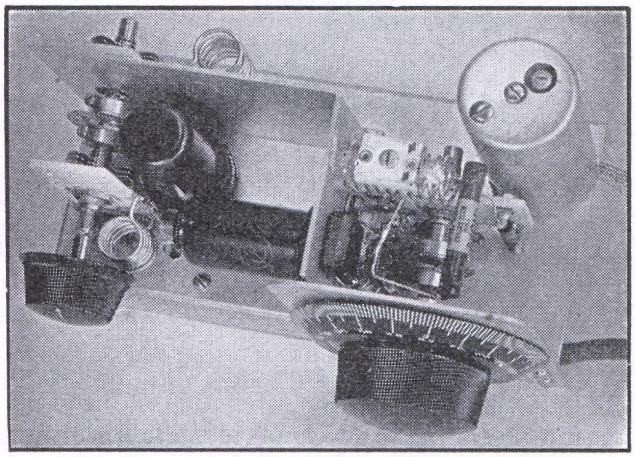

Fig. 1412 — A superhet converter for 56-Mc. reception. Designed for use with a communications-type receiver, this converter has an 1852 r.f. stage and a 6K8 mixer-oscillator. It uses a high-frequency i.f. (10 Mc.) for image reduction.

The oscillator-mixer section of the circuit is to the right of the 2½-inch partition, with the tube socket mounted on the same side. C_3, also mounted on the partition, is located at the rear of the tube socket. The i.f. transformer, T_1, is mounted at the right-rear corner of the chassis. The output leads from this transformer are shielded to prevent stray pick-up between the converter and the receiver. By-pass condensers and resistors are closely grouped around the tube socket, assuring short leads. A trimmer condenser, C_4, soldered across L_3, allows a small variable capacity to be used as the tuning element and at the same time makes the circuit fairly high-C in the interests of good stability.

A small panel is used to mount a vernier dial for the oscillator condenser. Since the r.f. tuning is not critical and, indeed, is broad enough to cover a good portion of the band with one setting, a small knob gives sufficient control.

The output line may be connected to the antenna and ground terminals of the standard receiver used as an i.f. amplifier, or to the "doublet" terminals, if provided. The exact i.f. chosen is not particularly important, so long as it is in the vicinity of 10 Mc. Choose a frequency which is free from signals, if possible, so that there will be no unnecessary interference from this source.

Tuning of the converter is as follows: With the r.f. and oscillator condensers at about half capacity, the padder, C_4, is adjusted until 56-Mc. stations of known frequency are heard. After this the padder may be set to bring the

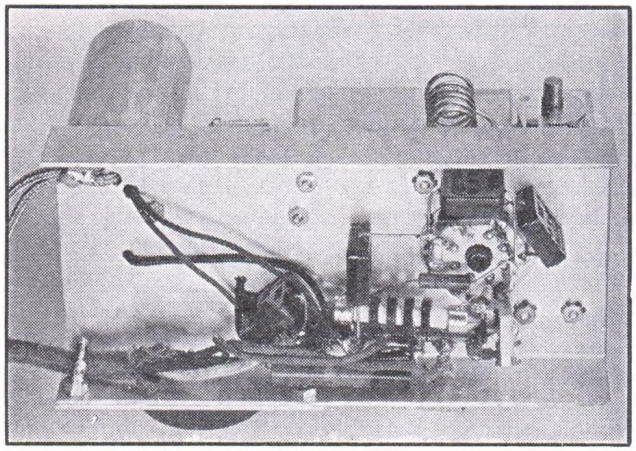

Fig. 1414 — Below-chassis wiring of the metal-tube converter. The 1852 socket may be seen at the right.

high-frequency end of the band near minimum capacity on C_3. The i.f. transformer should then be tuned for maximum signal strength. The 56–60-Mc. band will occupy approximately 60 to 70 divisions on the dial. The r.f. and mixer input circuits, L_1C_1 and L_2C_2, may be made to track by squeezing or spreading the turns of L_1 and L_2 until both cover the same frequency range, as determined by loosening C_1 from the coupling and turning it independently to see if it peaks the noise at the same setting as C_2.

Any type of antenna may be used, so long as it loads the r.f. grid circuit quite heavily. Optimum operation will result under these conditions. A single-wire antenna may be capacity-coupled, while a two-wire feeder system preferably should be inductively coupled. The coupling coil should be slightly smaller than the r.f. coil, L_1.

• A SUPERREGENERATIVE RECEIVER FOR 112 AND 224 MC.

The receiver shown in Figs. 1415, 1416 and 1417 has very good sensitivity on both 112 and 224 Mc., although it is not free from radiation as is a receiver with an r.f. stage. However, for the amateur who wishes to experiment on these two u.h.f. bands, this receiver will permit good reception at a minimum of expense. There is nothing unusual about the circuit — it is the self-quenched detector familiar to all u.h.f. men followed by two stages of audio amplification.

The receiver is built on a 7- by 7- by 2-inch chassis. The dial is mounted in the center of the panel and is connected to the tuning condenser by a bakelite flexible coupling. The condenser is mounted on a metal bracket cut out in the shape of a "U" to clear the stator connections of the condenser.

The socket for the plug-in coils is made from the contacts taken from an Amphenol 78-7P miniature tube socket. They are obtained by squeezing the socket in a vise until the bakelite cracks, after which they can be easily removed. One of these contacts is soldered to each of the tuning condenser connections and a third is soldered to a lug supported by one of the extra holes of the Isolantite base of the tuning condenser. The only care necessary in mounting the contacts is to see that they are all the same height, so that the plug-in coil will seat well on them. The band-set condenser, C_2, is mounted by soldering short strips of wire to the ends and then soldering these wires to the tuning condenser terminals.

The polystyrene tube socket for the 9002 is mounted on a metal bracket which is placed

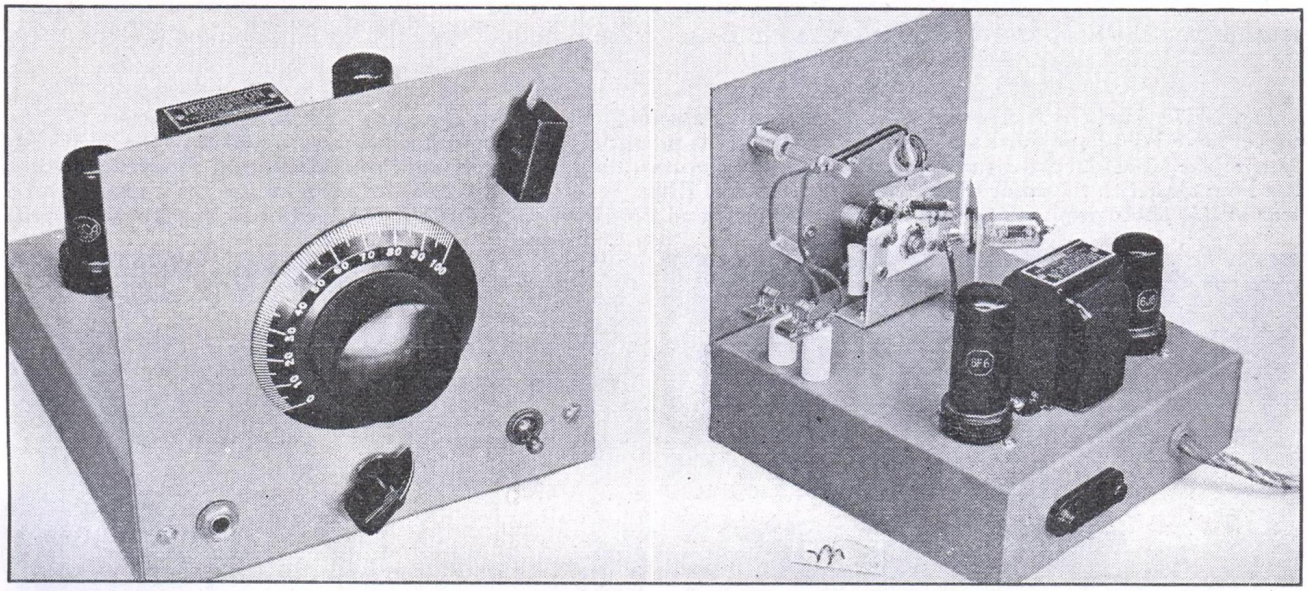

Fig. 1415 — Left — The panel of the two-band superregenerative receiver measures 7 inches square. The knob in the upper right-hand control adjusts the antenna coupling and the knob below the tuning dial controls the regeneration. Right — A view of the back of the two-band superregenerative receiver shows the variable antenna coupling and the placement of parts. Note the 224-Mc. coil in the foreground — the 112-Mc. coil is in the coil socket.

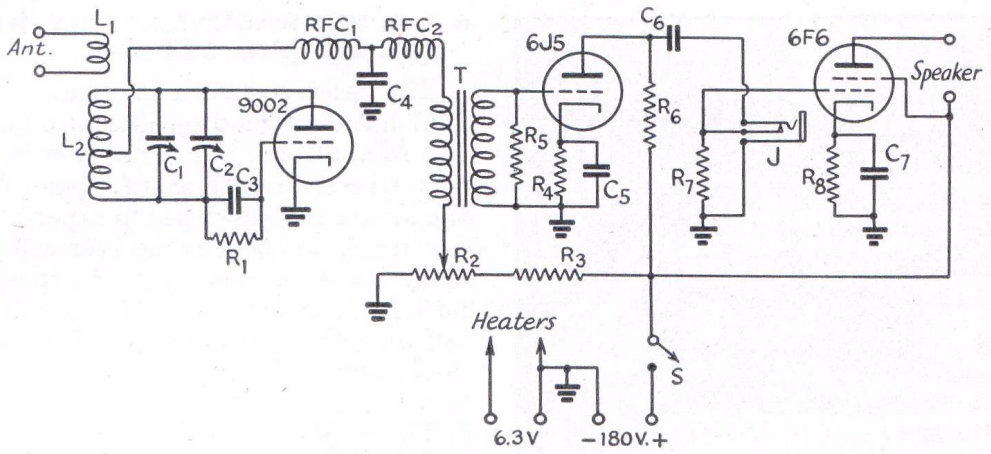

Fig. 1416 — Wiring diagram of the two-band superregenerative receiver.

C_1 — Two-plate variable (National UM-15 with 4 plates removed).
C_2 — 3 — 30-$\mu\mu$fd. mica trimmer.
C_3 — 50-$\mu\mu$fd. mica.
C_4 — 0.003-μfd. mica.
C_5, C_7 — 10-μfd. electrolytic, 25 volts.
C_6 — 0.01-μfd. paper, 400 volts.
R_1 — 10 megohms.
R_2 — 50,000-ohm potentiometer, wire-wound.
R_3 — 0.1 megohms, 1 watt.
R_4 — 2500 ohms.
R_5, R_6, R_7 — 0.1 megohms.
R_8 — 500 ohms, 1 watt.
All resistors ½-watt carbon unless otherwise mentioned.
J — Closed circuit jack.
S — S.p.s.t. toggle switch.
T_1 — Single plate to single grid audio transformer (Thordarson T57A36).

L_1 — 1 turn No. 14 enam. wire, ⅜-inch inside diam.
L_2 — 112 Mc.: 3 turns No. 18 enam., ½-inch diam., spaced to ¼-inch winding length. Tap 1¼ turns from plate end.
224 Mc.: 2 turns No. 18 enam., ¼-inch diam., spaced to ½-inch winding length. Tapped at center.
RFC_1 — 25 turns No. 24 d.c.c. close-wound self-supporting. ¼-inch inside diam.
RFC_2 — 8 mh. r.f. choke.

close enough to the tuning condenser to allow a very short lead from the tuning condenser to the plate connection and just enough room between the rotor of the condenser and the grid connection of the tube for the grid condenser to fit. The heater and cathode leads are brought down to the underside of the chassis through a rubber grommet.

The variable antenna coupling coil is mounted on a polystyrene rod supported by a shaft bearing. The rod is prevented from moving axially in the bearing by cementing a fiber washer to the shaft and tightening the knob on the other side so that the shaft does not move too freely. The antenna coupling loop should be adjusted so that it will just clear the coils when they are plugged in the socket.

The coils are mounted on small strips of ⅛-inch polystyrene (Millen Quartz-Q) which have three small holes drilled in them corresponding exactly to the tops of the coil sockets. The coil is cemented to the strip with Duco cement at the points where the wire passes through the strip. The No. 18 wire used for the coils will fit snugly in the sockets if the sockets are pinched slightly. A coil socket of this type

Fig. 1417 — Left — A close-up view of the tuning assembly shows how the leads from tuning condenser to tube socket have been kept short and how the coil socket is mounted on the tuning condenser. Hidden by the grid condenser (the 50-$\mu\mu$fd. condenser so prominent in the picture), the plate terminal of the tube socket goes to a lug that has been added to the rotor of the tuning condenser. Right — The arrangement of parts under the chassis can be seen in this photograph. The 6J5 socket is on the left and the 6F6 socket is on the right, near the speaker terminals.

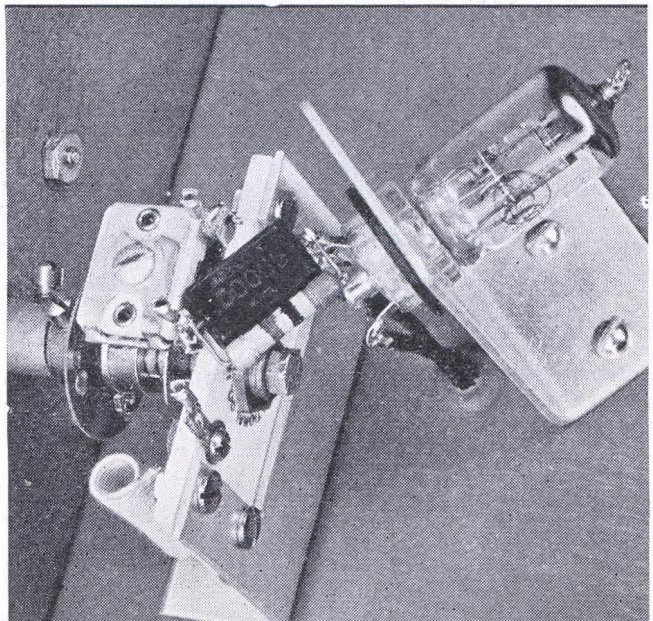

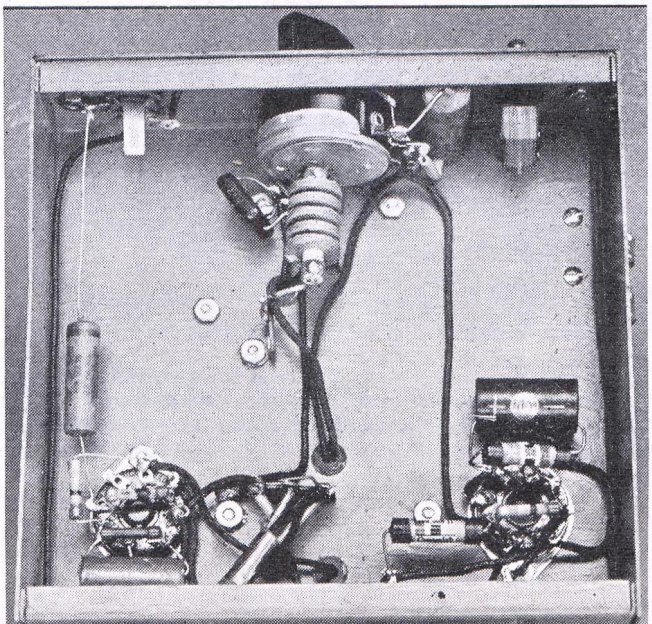

allows very short leads to be used and is about the only thing practical until some manufacturer brings out a commercial product along these lines. The coils are trimmed to the bands by spreading the turns slightly, a procedure familiar to any u.h.f. man. However, in this case the band-set condenser gives some further range of adjustment and, in the receiver as described, it is screwed down fairly tightly for the 112-Mc. band and loosened about four revolutions for 224 Mc. If there are no good marker stations among the local amateurs, the Lecher wires described in Chapter Eighteen are excellent for spotting the bands.

Two things will be found to influence the sensitivity of the receiver, the value of C_4 and the degree of antenna coupling. It is recommended that values of C_4 from 0.001 to 0.005 μfd. be tried. The antenna coupling will, of course, vary greatly with the setting of the coil and with the type of antenna that is used, and it is well worth while to tune the antenna circuit and then vary the coupling with the panel control. Tight coupling will usually give better results than loose coupling, and the coupling can be increased almost up to the point where it is impossible to make the detector oscillate with no ill effects except increased radiation and QRM for other receivers in the vicinity.

No audio volume control was included in this receiver because the parts were held down to a minimum, but one could easily be added. In this receiver, the value of R_7 was adjusted until normal loud speaker output was obtained, and it can be varied to meet anyone's particular requirements. (*Bib.* 3.)

• A T.R.F. SUPERREGENERATIVE RECEIVER

The receiver shown in Figs. 1418, 1419, 1420 and 1421 is practically identical to that described above with the exception that a stage of tuned r.f. amplification and an audio gain control have been added. The 9001 used for the r.f. amplifier gives some slight gain, good freedom from antenna effects and — most important of all — it prevents any radiation from the receiver.

The arrangement of parts, as shown in the photographs, is convenient in that it gives a fully-shielded receiver (except for the r.f. tubes) that is easy to work on. The r.f. unit can be demounted from the chassis and worked with separately and, once adjusted, it can be replaced and left alone. The receiver is a one-band affair, but the only disadvantage there is lack of economy. The main chassis is 7- by 7- by 2 inches and contains the audio end of things and the volume and regeneration controls. The r.f. portion is housed in a 3- by 4- by 5-inch box and everything but the dial and antenna terminals are mounted on a removable cover, enabling the builder to get at the parts easily. Only three leads are brought down from this box to the main chassis, and they are left long enough so that they do not need to be un-

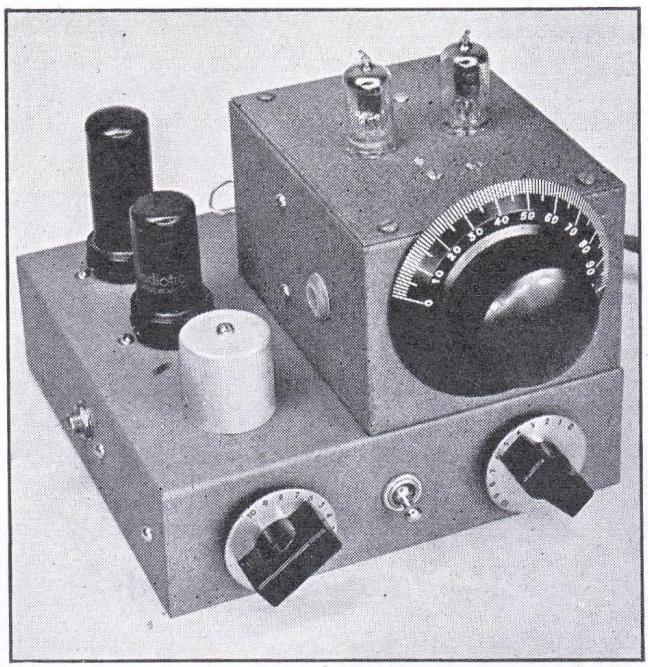

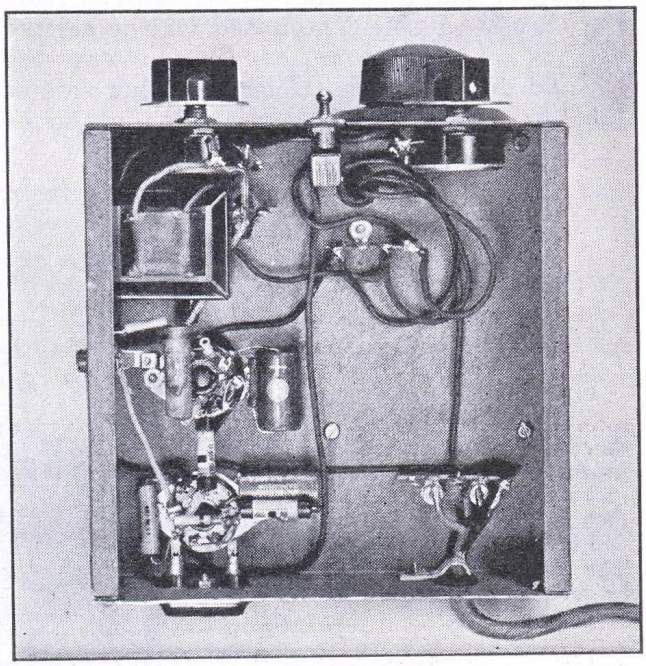

Fig. 1418 — Left — The 112-Mc. t.r.f. superregenerative receiver uses a 9001 r.f. stage, a 9002 detector, a 6J5 first audio and a 6F6 output stage. The knobs along the front are audio volume control (left) and regeneration control. The rubber grommet on the side of the 3- by 4- by 5-inch box centers the screwdriver used for setting the detector band-set condenser — a similar one is provided on the other side for the r.f. band-set adjustment. Note the 'phone jack on the side — the speaker terminals are located at the rear. Right — A view under the chassis of the t.r.f. receiver shows the audio transformer and some of the other components. Note the three wires coming through the chassis to the right of the B+ switch — they are the leads from the r.f. section of the receiver.

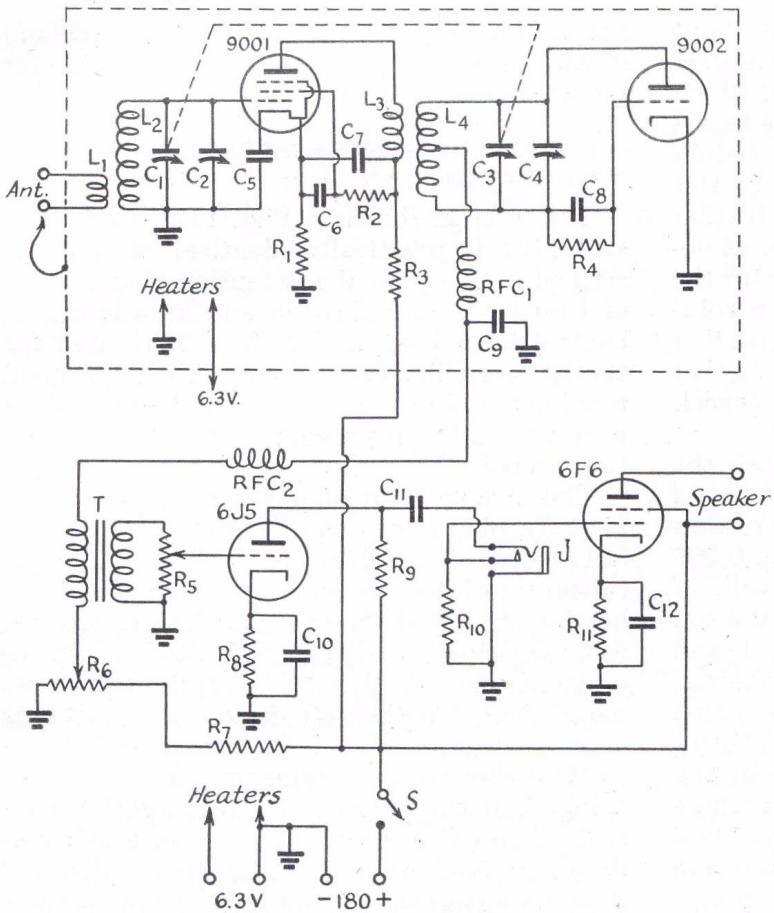

Fig. 1419 — Wiring diagram of the 112-Mc. t.r.f. superregenerative receiver.

C_1, C_3 — 2-plate midget variable (National UM-15 with 4 plates removed) ganged.
C_2, C_4 — 3 — 30-$\mu\mu$fd. mica trimmer (National M-30 or Millen 28030).
C_5, C_6, C_7 — 500-$\mu\mu$fd. mica.
C_8 — 50-$\mu\mu$fd. mica.
C_9 — 0.003-μfd. mica.
C_{10}, C_{12} — 10-μfd. electrolytic, 25 volts.
C_{11} — 0.01-μfd. paper, 400 volts.
R_1 — 200 ohms.
R_2 — 0.25 megohm.
R_3 — 10,000 ohms.
R_4 — 10 megohms.
R_5 — 0.5-megohm volume control.
R_6 — 50,000-ohm regeneration control, wirewound.
R_7, R_9 — 0.1 megohm, 1 watt.
R_8 — 2500 ohms.
R_{10} — 0.5 megohm.
R_{11} — 500 ohms, 1 watt.
All resistors ½-watt carbon unless otherwise mentioned.
L_1 — 1⅜ turns No. 28 d.s.c. interwound between L_2.
L_2 — 2 turns No. 20 enam., ¼-inch winding length. See text for trimming method.
L_3 — 1½ turns No. 28 d.s.c. interwound between L_4.
L_4 — 2¼ turns No. 20 enam., ¼-inch winding length. Tapped ½ turn from plate end. See text for trimming method.
L_1–L_2 and L_3–L_4 wound on National PRE-1 forms.
RFC_1 — U.h.f. r.f. choke (Ohmite Z-1).
RFC_2 — Low-frequency choke (National OSR with windings in series. Connect B+ and Gnd together.)
J — Closed circuit jack.
S — S.p.s.t. toggle switch.
T_1 — Single plate to single grid audio transformer (Thordarson T-13A34).

soldered every time the box is removed from the chassis. A shield mounted on the side of the box helps to prevent coupling between the r.f. and detector coils. Holes on either side of the box allow the trimmer condensers to be adjusted when the receiver has been finally assembled.

As can be seen from the close-up view of the r.f. portion, the two tuning condensers and the two sockets are mounted on the removable top

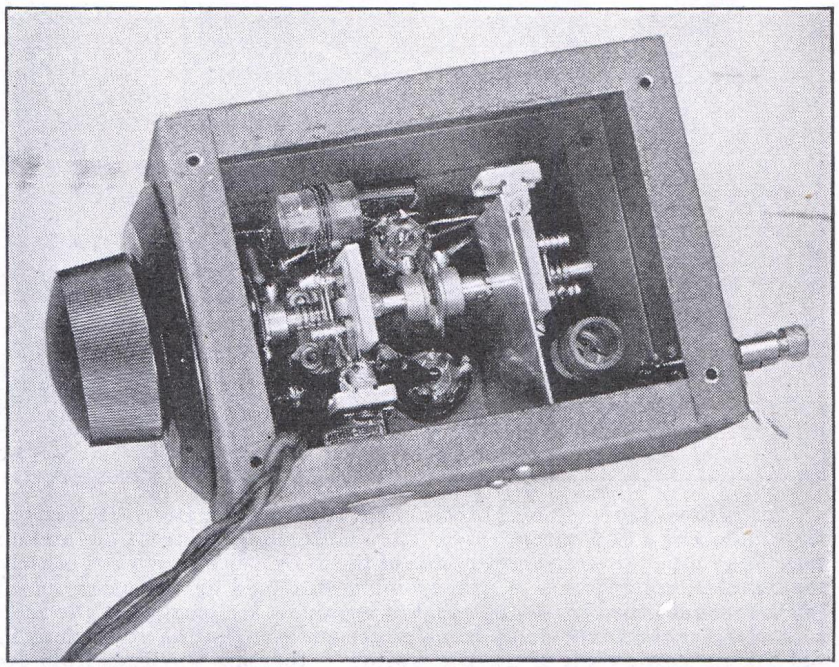

Fig. 1420 — The r.f. section of the receiver removed from the chassis. The detector tuning condenser is the one nearer the tuning dial and the detector socket is the one at the bottom of the picture. Note the interstage shield which is fastened to the side of the box. The trimming loop of the r.f. coil can be seen in the coil near the antenna posts.

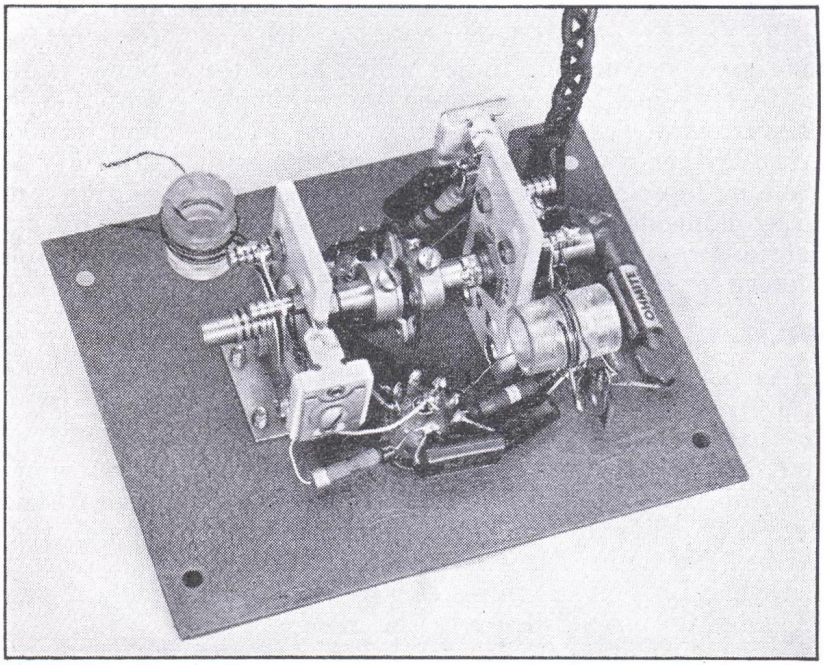

Fig. 1421 — This close-up of the r.f. assembly shows the arrangement of parts and how the band-set condensers are mounted on the tuning condensers. Note the loose ends of the antenna coil (upper left) which are soldered to the antenna posts after the assembly is returned to the box.

of the box and they support all of the components. The trimmer condensers are soldered directly to the tuning condenser terminals and the coils are self-supported by their leads. A tie strip takes the leads that run out of the box and also serves as a convenient point to fasten RFC_1, C_9 and some of the other resistors and condensers. The leads are not quite as short in this arrangement as they are in the other receiver, but it makes no difference because the receiver is built only for 112 Mc. and does not have to get down to 230 Mc.

The coils are wound on small polystyrene forms. It is suggested that the No. 20 wire coils be wound first and the plate tap for L_4 soldered. The coils can then be doped and, when the dope has hardened, the fine wire coils can be more easily wound in between the turns and fastened with dope. The No. 20 wire coils run through holes in the forms, while dope only is used to keep the fine wire coils secure. This has the advantage that the fine wire coils can be trimmed by "peeling off" a small fraction of a turn at a time — the larger coils are trimmed by bringing back the last half turn through the *inside* of the coil. By moving this half turn around, the inductance of the coil can be adjusted over a range wide enough to allow the detector and r.f. circuits to track well over the whole band. This method of inductance trimming is described elsewhere in the *Handbook* (§ 7-7).

The r.f. stage is trimmed by adjusting its trimmer condenser to the point where the regeneration control has to be set at a maximum. Either side of this point the control does not have to be advanced as far, and this indicates that the r.f. stage is not in resonance. When the r.f. and detector circuits are tracking well it will not be necessary to change the setting of the regeneration control more than 45° or so over the entire range. The bandspread can be increased by using less inductance and more trimmer capacity — with the coil specifications given the band covers about 75 of the 100 divisions of the dial.

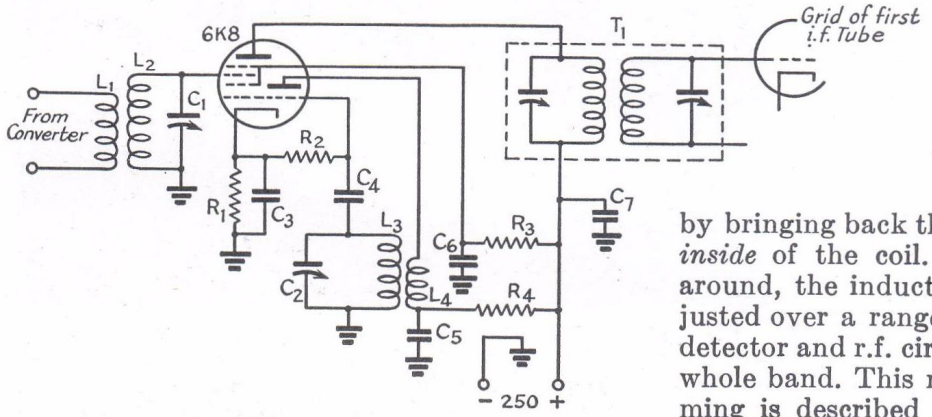

Fig. 1422 — Circuit diagram of converter for f.m. amplifier.

C_1, C_2 — 100-$\mu\mu$fd. midget variable.
C_3, C_6, C_7 — 0.01-μfd. paper, 400 volts.
C_4 — 50-$\mu\mu$fd. mica.
C_5 — 0.002-μfd. mica.
R_1 — 250 ohms, ½ watt.
R_2 — 50,000 ohms, ½ watt.
R_3 — 25,000 ohms, 1 watt.
R_4 — 50,000 ohms, 1 watt.
T_1 — Input transformer to f.m. amplifier.
L_1 — 4 turns No. 22 d.c.c. closewound ¼ inch from L_2.
L_2 — 10 Mc.: 11 turns No. 22 d.c.c. closewound on 1-inch diam. form.
L_3 — 15 Mc.: 5 turns No. 22 d.c.c. closewound on 1-inch diam. form. 13 Mc.: 6 turns No. 22 d.c.c. closewound on 1-inch diam. form.
L_4 — 2 turns No. 22 d.c.c. closewound and distance from L_3 adjusted to give 0.15 ma. current through R_2.

A two-wire line from the antenna will normally be best, and it should be tried with one side grounded or not, to see which gives the better coupling. In one instance where a single-wire antenna was used, some instability of the r.f. amplifier was traced to the antenna wire running too close to the detector tube, and it is recommended that the antenna wire or wires be run away in such a fashion that there is no chance for coupling of this type. (*Bib.* 3.)

• F.M. I.F. AMPLIFIERS

As pointed out earlier in this chapter, an f.m. receiving system differs from an a.m. one in that the pass band is wider and a limiter and discriminator are used instead of a second detector. The front end of an f.m. receiver is conventional, and any of the converters described can be used to feed an f.m. i.f. amplifier. The f.m. i.f. amplifier can be either the i.f. amplifier of a broadcast f.m. receiver (of which there are several on the market) or it can be readily built by the amateur. If the i.f. system of the f.m. broadcast receiver is used, the i.f. frequency should be learned so that the output of the converter can be tuned to this frequency and coupled to the grid of the mixer tube of the receiver, or if the converter is already built, a separate converter to work from the first converter into the f.m. intermediate frequency can be used. Such a device is shown in Fig. 1422.

Since most of the available broad-band i.f. transformers suitable for f.m. reception are built for frequencies of 5, 4.3 and 3 Mc., it is necessary to use a conversion between the output of the converter (usually 10 Mc.) and the f.m. i.f. system, unless the converter is rebuilt to give output on the f.m. intermediate frequency. Such a converter can be made simply from a single 6K8 tube, and the circuit and necessary constants are given in Fig. 1422. The combination of C_1-L_2 is tuned to the converter output frequency. T_1 is the input transformer of the f.m. amplifier, and L_3-C_2 is tuned to the sum of the converter output frequency plus the f.m. amplifier frequency. For example, a converter giving 10-Mc. output and working into a 5-Mc. i.f. amplifier will have the oscillator (L_3-C_2) tuned to 10 + 5 or 15 Mc.

• A 5-MC. F.M. I.F. SYSTEM

The i.f. amplifier shown in Figs. 1423, 1424 and 1425 is a broad-band affair working on 5 Mc. that can be used for either f.m. or a.m. reception by switching the grid lead of the first audio tube from across the discriminator load (for f.m. reception) to the limiter grid resistor for a.m. reception. Because a wider-band amplifier is required for f.m. than for a.m., the amplifier is not as selective as it could be on a.m. signals, but this presents no particular difficulty at the present time, with QRM presenting a problem only in rare instances. Used with the converters described (or any combination capable of working into a 5-Mc. amplifier), the system can be used for the reception of a.m. and f.m. signals in the 43-Mc. band, a.m. and f.m. amateur signals in the 56-Mc. band, and f.m. and a.m. signals in the 112-Mc. band. If you can get the fellows you work on 112 Mc. who are using modulated oscillators to cut down their modulation (and thus bring their frequency deviation down to a reasonable range), the system makes a grand receiver for the reception of modulated oscillators, and even the smallest transceiver will sound many times better and save audio power as well.

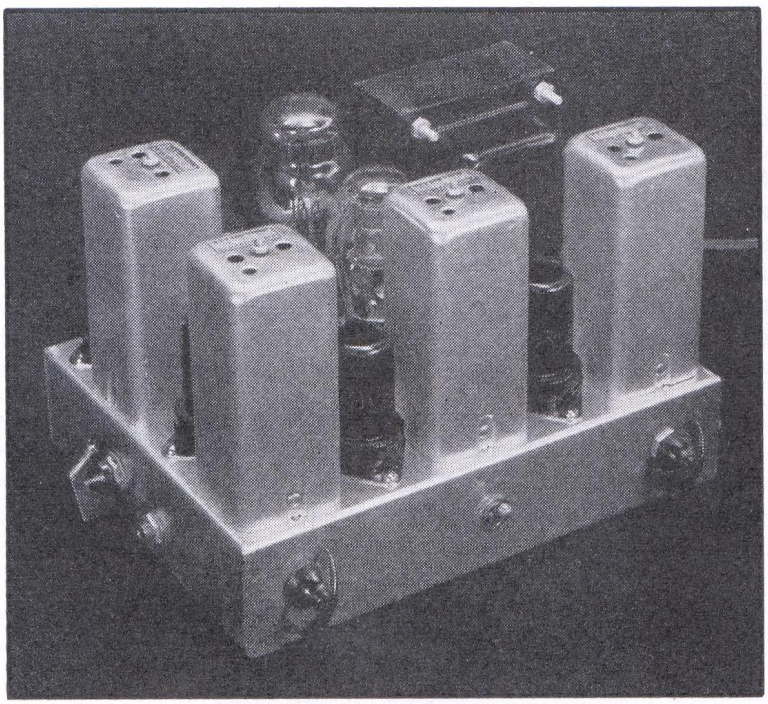

Fig. 1423 — The 5-Mc. f.m./a.m. amplifier is built, complete with power supply, on a 7-inch by 9-inch by 2-inch chassis. Controls on the front, from left to right, are audio volume control, B-plus switch and limiter control. The switch on the side is for changing from f.m. to a.m. and back, and the jack allows a meter to be plugged in to read limiter current.

As can be seen from an examination of Fig. 1424, two stages of high-gain amplification using Type 1852 tubes are unconventional only in that resistors are used across the transformer windings, to widen the pass band, and no gain control is included. No control of gain is required because it is always desirable to work the stages preceding the limiter at their highest level. The limiter stage uses a 6SJ7, with provision through R_{18} to control the plate and screen voltage to set the limiting action to

meet operating conditions. The use of a grid leak and condenser, R_{16} and C_7, and low screen and plate voltage allows the tube to saturate quickly, even at low signal levels, and the tube wipes off any amplitude modulation (including noise) and passes only frequency modulation. For a.m. reception, the audio system is switched, by Sw_1, on to the grid leak, R_{16}, and the grid and cathode of the tube are used as a diode rectifier to feed the audio system. The jack, J, in series with the grid leak, is used for plugging in a low-range milliammeter so that the limiter current can be read. The limiter current indication is invaluable in aligning the amplifier, and the meter can be used as a tuning meter during operation.

The discriminator circuit uses a 6H6 double diode in the conventional circuit. Audio from the discriminator (or from the limiter stage, in a.m. reception) is fed through the volume control, R_{25}, into a two-stage audio amplifier using a 6SF5 and 6F6 output pentode. The resistor R_{11} and the condenser C_{12} in the input of the audio circuit serve as a combined r.f. filter and a compensating network to attenuate the higher audio frequencies. It is necessary to include some sort of compensation when listening to 43-Mc. broadcast stations, since nearly all of them use "pre-distortion" (accented higher frequencies). A 0.01-μfd. paper condenser can be added across the output terminals for further compensation, if it is considered necessary.

The power supply uses a two-section filter, and an outlet socket is provided so that the converter power cable can be plugged in. A VR-150 regulator tube is used to regulate the voltage on the converter, making for additional stability of the converter with changes in line voltage. The addition of the regulator tube adds little in the way of expense to the amplifier and, although not absolutely necessary, is a nice refinement. If desired, it can be left out by simply erasing it from the circuit.

The amplifier is built on a 7-inch by 9-inch by 2-inch chassis. Reference to Figs. 1423 and 1425 will show the location of the parts on the chassis. After all of the holes have been drilled for the various components, the sockets and the transformer should be fastened in place on the chassis, leaving off the variable resistors, switches, binding posts, jack and chokes until after most of the wiring has been done.

If the amplifier is to be built to use low-impedance input coupling, as when working from

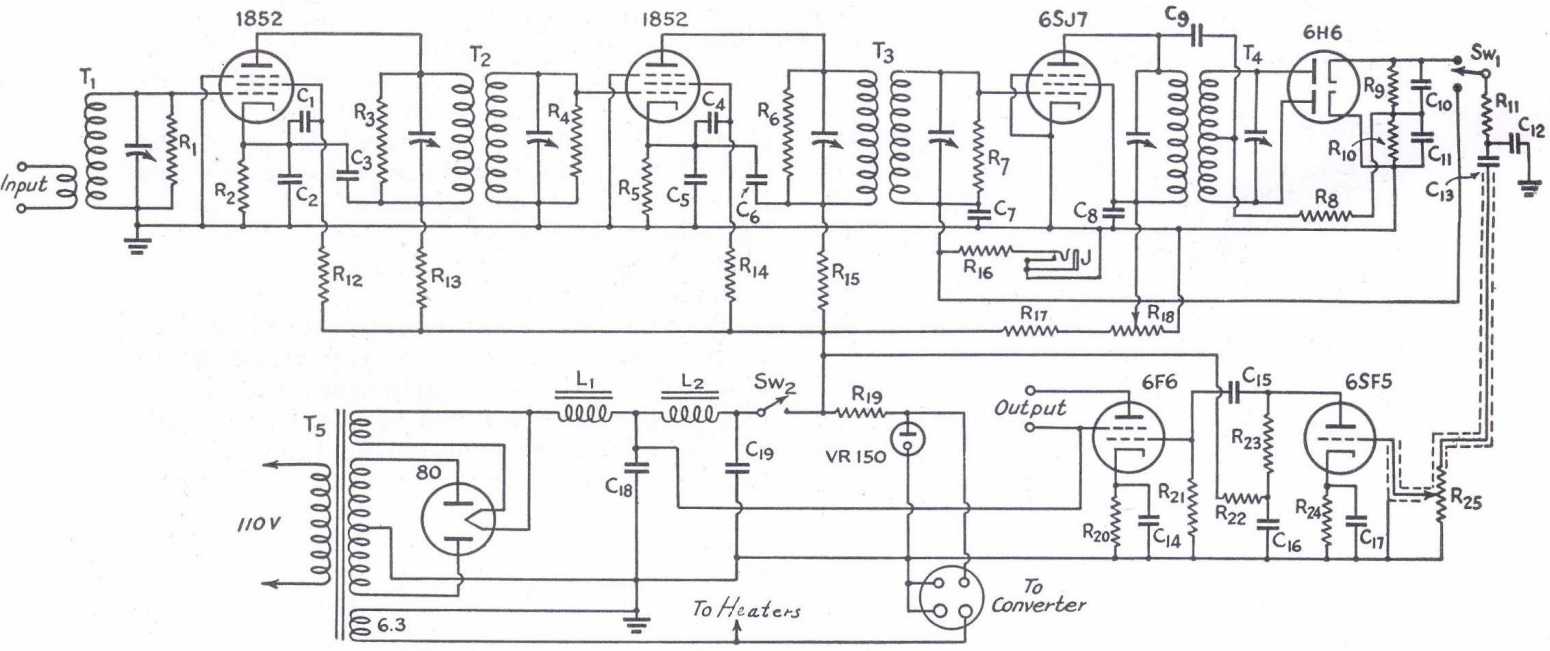

Fig. 1424 — Wiring diagram of the 5-Mc. f.m./a.m. amplifier.

C_1, C_2, C_3, C_4, C_5, C_6, C_8, C_{13}, C_{15} — 0.01-μfd., 600-volt paper.
C_7, C_{10}, C_{11} — 100-$\mu\mu$fd. midget mica.
C_9 — 50-$\mu\mu$fd. midget mica.
C_{12} — 0.001-μfd. midget mica.
C_{14}, C_{17} — 10-μfd., 25-volt electrolytic.
C_{16}, C_{18}, C_{19} — 16-μfd., 450-volt electrolytic.
R_1, R_4 — 55,000 ohms. R_2 — 200 ohms.
R_3, R_6 — 50,000 ohms. R_5 — 300 ohms.
R_7 — 40,000 ohms. R_8, R_{11}, R_{22} — 75,000 ohms.
R_9, R_{10}, R_{16} — 150,000 ohms. R_{12}, R_{14} — 60,000 ohms.
R_{13}, R_{15} — 100 ohms.
R_{17} — 25,000 ohms, 10-watt wire wound (Ohmite).
R_{18} — 3000-ohm wire-wound potentiometer.
R_{19} — 5000 ohms, 10-watt wirewound (Ohmite).
R_{20} — 500 ohms, 1-watt.
R_{21}, R_{23} — 250,000 ohms.
R_{24} — 5000 ohms.
R_{25} — 500,000-ohm volume control.
T_1 — 5-Mc. input transformer, modified. See text (Millen 67503).
T_2, T_3 — 5-Mc. interstage transformer (Millen 67503).
T_4 — 5-Mc. discriminator transformer (Millen 67504).
T_5 — 700-volt, 90-ma. transformer with 6.3- and 5-volt windings.
L_1 — 9-henry, 85-ma. choke (Thordarson T-13C29).
L_2 — 10-henry, 65-ma. choke (Thordarson T-13C28).
Sw_1 — Selector switch, only two positions used (Yaxley 32112-J).
Sw_2 — On-off switch, s.p.s.t. toggle.
J — Closed-circuit jack.

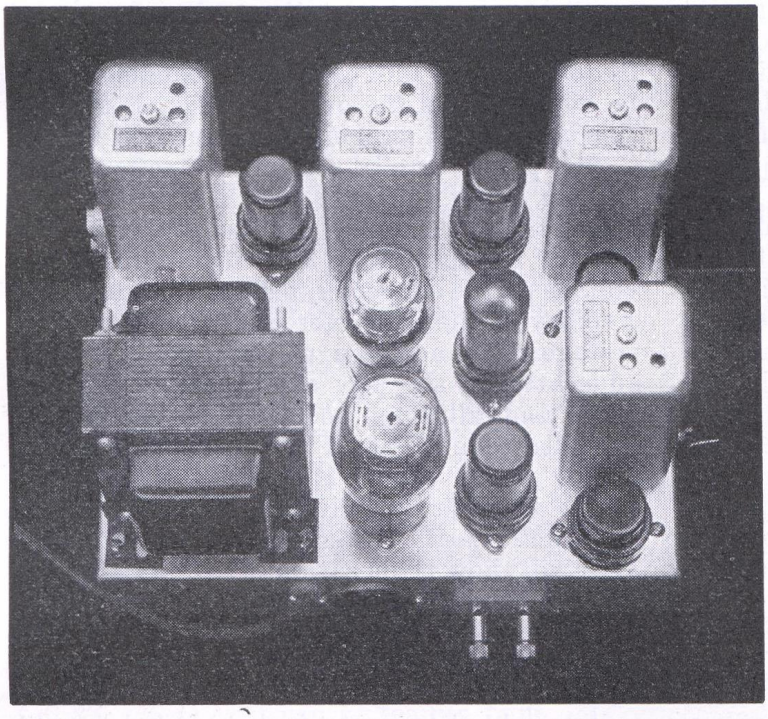

Fig. 1425 — A view of the top shows the arrangement of parts Along the rear, from left to right, are the input transformer, first 1852, interstage transformer, second 1852 and interstage transformer. The second row of tubes, from right to left, are the 6SJ7 limiter, 6F6 audio output and VR-150 voltage regulator. The transformer at the right front is the discriminator transformer, the 6H6 detector is in front of it. The tube to the left of the 6H6 is the 6SF5 first audio. Output terminals, converter power supply socket, and 110-volt line cord can be seen.

a converter removed some distance from the amplifier, the first i.f. transformer must be modified. A link winding is made by first winding a short strip of half-inch wide paper for several turns over the cardboard tubing used as a form in the i.f. transformer. Eleven turns of No. 30 d.s.c. wire are then close-wound flat around the center of the paper ring. Holding the wire in place with a finger, paint the coil with Duco cement to secure the turns in place. When the cement has dried, it should be possible to slip the coil off the cardboard form. The plate and B-plus wires are removed from the trimmer condenser in the transformer, and the wires from the plate coil to the trimmer condenser are disconnected. By unwinding and cutting off a turn or two of paper from the inside of the paper ring, the 11-turn coil can now be slipped easily over the grid coil and fastened in position so that it covers the ground end of the grid coil. A piece of paper should be slipped between the grid coil and the ground lead from the grid coil, to avoid any possibility of this lead shorting against the turns of the coil when the paper ring is slipped in place. The two ends of the link coil are brought out the bottom of the transformer can and later fastened to the input terminals of the set.

It is, of course, possible to use the transformer as is, by running the plate lead of the transformer to the plate of the mixer tube in the converter, but this makes it less convenient to use the converter with sharper i.f. amplifiers, since it would require soldering and unsoldering wires in the converter each time the change was made. Further, the long lead to the mixer tube would increase the chances for stray pickup of signals in the vicinity of 5 Mc.

The screen by-pass condensers, C_1, C_4 and C_8, are mounted across the sockets so that they act as a partial shield between the plate and grid of the tube, as is the custom with single-ended tubes. Tie-points are used wherever they are needed for mounting resistors and condensers. It is recommended that the 1852, 6SJ7 and 6H6 stages be wired first, so that the leads carrying r.f. can be made as short and direct as possible. After that, the rest of the leads can be filled in wherever convenient. The wires from the audio volume control, R_{25}, are shielded by running them in a single piece of flexible copper braid. Whenever convenient, spare pins on sockets were used to support resistors, condensers, etc.

If the parts list is duplicated, it will be found that the two variable resistors mounted on the front of the chassis will not clear the spade bolts projecting down from the i.f. transformers above, and this is easily remedied by cutting off ⅛ inch of the spade bolts before mounting the transformers in place. Also, in order to make room for the 6SF5 cathode by-pass condenser, C_{17}, some of the binding-post strip for the output terminals had to be filed off. A simpler way would be to mount the binding-post strip nearer the bottom of the chassis. The input terminals, a Millen crystal holder, are mounted on the outside of the chassis so that they will clear the limiter control. A handy connector for plugging into this input terminal can be made from an old 5-prong tube base or coil form, by sawing across the base and removing the two correctly-spaced pins and their supporting strip of bakelite.

If you have a source of 5-Mc. signal, such as a signal generator, aligning the amplifier is a very easy matter. If you don't already have the source available, a simple e.c.o. can be built with the grid circuit on 2.5 Mc. and the plate on 5 Mc. using an ordinary receiving pentode like the 6K7. Or, if you already have the converter, tune your regular receiver to 5 Mc., couple in the converter and tune in a steady signal, such as a harmonic from your transmitter or some other strong signal. The converter output can now be transferred to the f.m./a.m. i.f. and the transformers aligned. This is done

by plugging in a 0–1 ma. meter in the jack, J, and tuning the trimmers of the transformers for maximum current. You may have to hunt around a bit before the meter shows any indication, but once it starts to read the rest is easy. With a variable-frequency signal source, the signal is swung back and forth until some indication is obtained and then the amplifier alignment is completed. The exact frequency of alignment is unimportant as long as every stage can be tuned *through* resonance, which means that each trimmer can be adjusted through a maximum reading of the tuning meter. With the resistors across the circuits, it will be found that the transformers tune a little broader than normal, and the correct setting is in the midpoint of the broad point. Now that transformers T_1, T_2 and T_3 are aligned, it should be possible to switch Sw_1 to a.m. reception and hear signals, or at least noise if the converter is on 56 or 43 Mc. There isn't much noise on 112 Mc.

The alignment procedure can be carried on with a speaker connected to the output terminals through an output transformer or, if no speaker is used at this point, the terminals should be shorted with a jumper of wire, otherwise the 6F6 may be injured. The meter for alignment is a necessity, and no attempt should be made to line up the amplifier by ear except for very rough initial alignment.

If you live within the range of an f.m. broadcast station, adjustment of the transformer T_4 is a simple matter. Switch the amplifier on a.m., plug in the proper coils in the converter and tune in the f.m. station. It will sound pretty awful but don't worry about that. Switch the amplifier to f.m. and tune around with the trimmers on T_4 until you start to hear the signal again. This is best done with the audio gain almost wide open and the limiter control set at about half scale. The trimmers are best adjusted with an insulated tool, to reduce body capacity effects, and they should be adjusted until the b.c. signal is clearest and loudest. It will be found that one of the trimmers (plate circuit) will affect the volume mostly, while the trimmer in the grid circuit will have the greatest effect on the quality. During this period of adjustment, the receiver is kept tuned to the signal as indicated by maximum limiter current. If one is available, an audio output meter can be used to determine maximum audio output, although it is not an essential.

In the event that there is no local f.m. broadcast station, the only alternative is to line up the discriminator on an f.m. signal from an amateur station or, as a last resort, from a 2½-meter modulated oscillator. The disadvantage with the self-excited u.h.f. oscillator is that it is usually modulated too heavily and it doesn't stay on one frequency long enough to allow the amplifier to be aligned.

The final adjustment of the discriminator tuning can be checked by tuning in an a.m. signal. If the discriminator is properly tuned, the audio output (signal and noise) should practically disappear at the point that the signal as indicated by limiter current is a maximum. This is an indication that the discriminator characteristic crosses the axis at the mid-resonance point of the amplifier. Tuning the signal (by tuning the converter), it should be possible to understand the audio output at points either side of this minimum-volume setting. These points should appear symmetrically on either side of the minimum-volume point and should have about the same volume. Slight readjustment of the discriminator-transformer settings will bring this about.

When using the amplifier, it will be noted that the a.m. signals appear to give louder signals than those from f.m. stations, comparing audio-volume-control settings on stations showing equal limiter current. This doesn't indicate that the amplifier isn't working properly nor does it indicate that more audio is obtained from an a.m. signal than from an f.m. signal of similar strength. It is, however, an indication that the discriminator characteristic could have more slope to it and not have its peaks so far apart. We mention this simply to forestall any inquiries on the part of amateurs experimenting with f.m. amplifiers. As discriminator-transformer construction is improved, this apparent shortcoming will disappear.

The performance of the amplifier on a.m. reception could be improved somewhat by the inclusion of a.v.c. on the two 1852 tubes, taking the a.v.c. voltage from the limiter grid leak through the usual filter circuit. However, this was considered an unnecessary refinement because the amplifier will be used primarily on f.m. reception and the provision for a.m. reception was considered of secondary importance. The amplifier should run "wide open" on f.m. reception. (*Bib.* 4.)

• A COMPACT 112-MC. RECEIVER FOR MOBILE WORK

The receiver shown in Figs. 1426, 1427, 1428 and 1429 is designed especially for mobile installations and particularly as a companion unit to the transmitter of Fig. 1541. The receiver is built in a 3- by 4- by 5-inch box (the same size as the control box) and it can be mounted on top of the control box or alongside it, depending on the available room in the car. As can be seen from the wiring diagram (Fig. 1428) a 6V6 output tube is used, and it will furnish more than enough output to operate a 5- or 6-inch speaker. Power for the receiver

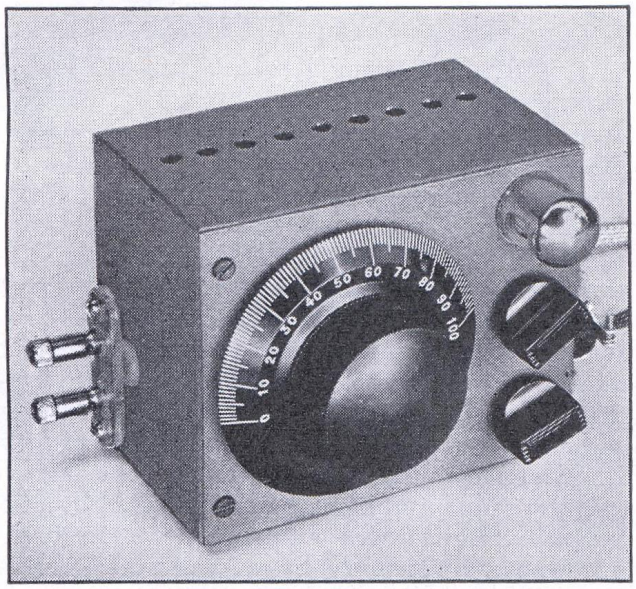

Fig. 1426 — The mobile 112-Mc. receiver is built in a 3- by 4- by 5-inch metal box. Antenna terminals and a hole to permit adjustment of the antenna coupling are at the left side. A pilot light at the top right-hand corner is included for easy reading of the dial during night operation. The speaker cable runs out through the rear of the cabinet.

can be furnished by the transmitter power supply, and the on-off switching of the receiver can be tied in with the transmitter control to facilitate changing over, or any other power supply that will deliver over 200 volts can be used.

A 9002 superregenerative detector is used, followed by a 6J5 and 6V6 audio amplifier. The antenna is inductively coupled to the detector, and this coupling is adjusted at the time of installation of the receiver. A band-set condenser, C_2, across the tuning condenser allows the band to be centered on the tuning scale and gives good band spread. Regeneration is controlled by the variable resistor R_3.

The construction of the receiver is not difficult, but close attention must be paid to the placement of parts in order that all of the components will fit into the box. The first step in laying out the receiver is drilling the holes for the dial. The tuning condenser shaft is centered between the top and bottom of the panel and located 1¾ inches in from the left-hand edge. Mounting holes for the tuning condenser are drilled using the Isolantite end-plate for a template, and the condenser is supported on 1⅜-inch spacers. The condenser is coupled to the dial through a flexible bakelite coupler and a short length of polystyrene rod, to insure adequate insulation between the condenser and the panel. Holes for the variable resistors and the pilot-light socket are drilled at the right-hand edge of the panel, ¾ inches in from the edge. The cabinet must be notched with a file to allow the resistors and light socket to clear the rolled-over edges when the unit is assembled.

A small bracket to carry the 9002 socket is made of 1/16-inch metal and attached to the tuning condenser. A good idea of the shape of the bracket can be obtained from Fig. 1429. The coil L_1 is mounted between the stator plate terminal of C_1 and pin No. 1 of the tube socket and C_2 is soldered across the terminals of C_1. A hole must be drilled in the bottom of the box just below the adjustment screw of C_2 so that any minor changes of band set can be made after the receiver is completely assembled.

The two audio tubes and the audio transformer are mounted in the box, as can be seen in Fig. 1427. The sockets are supported off the side of the box by small brass spacers so that the socket pins won't short on the metal of the box. It is convenient to make the connections to these sockets before they are fastened in place. The d.c. leads are brought to a 2-prong female socket located directly in front of the

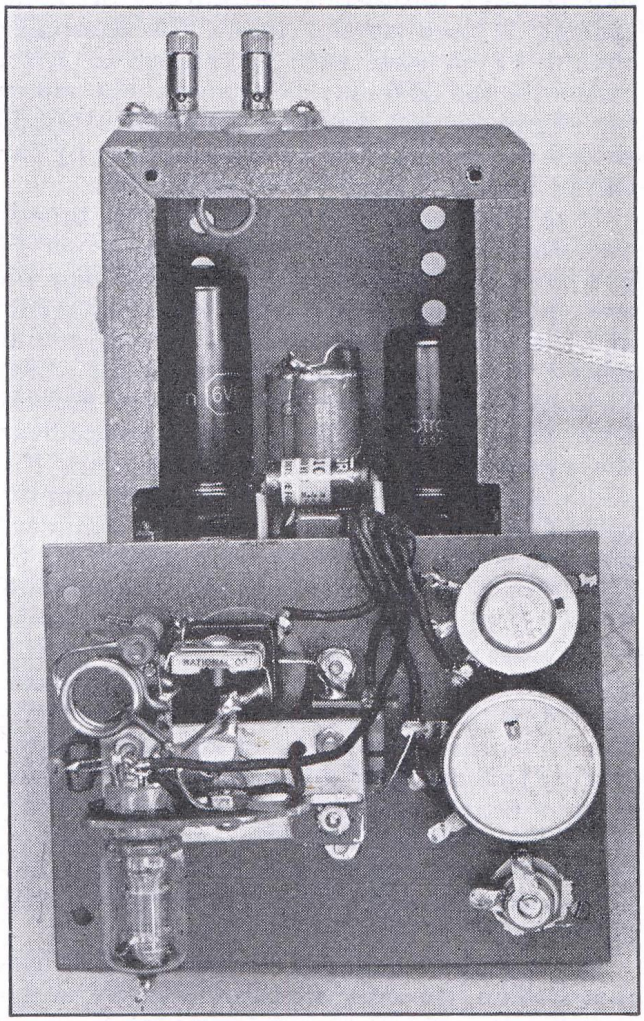

Fig. 1427 — A view of the detector assembly also shows the two audio tubes mounted inside the cabinet. Note the antenna link which is connected to the antenna terminals and fits into the proper position when the unit is assembled.

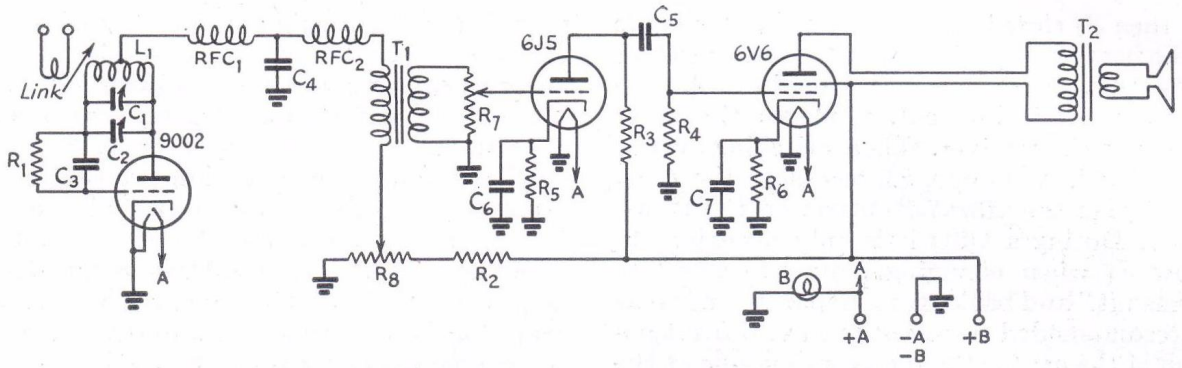

Fig. 1428 — Wiring diagram of the 112-Mc. mobile receiver.

C_1 — 15-$\mu\mu$fd. variable with four plates removed (National UM-15).
C_2 — 3 — 30-$\mu\mu$fd. mica.
C_3 — 50-$\mu\mu$fd. mica.
C_4 — 0.003-μfd. mica.
C_5 — 0.01-μfd. mica.
C_6, C_7 — 10-μfd. electrolytic, 25 volts.
R_1 — 10 megohms, ½ watt.
R_2, R_3 — 0.1 megohm, ½ watt.
R_4 — 0.25 megohm, ½ watt.
R_5 — 2500 ohms, ½ watt.
R_6 — 500 ohms, 1 watt.
R_7 — 0.5-megohm midget volume control.
R_8 — 50,000-ohm variable.
RFC_1 — U.h.f. r.f. choke (Ohmite Z-1).
RFC_2 — R.f. choke (Meissner 19–1995).
T_1 — Plate to grid coupling transformer (Inca G-52).
T_2 — Speaker transformer, 10,000 to 4 ohms (Jensen Z2362).
Speaker — 5-inch (Jensen ST-443).
L_1 — 3 turns No. 12 wire, ½-inch diam., spaced diam. of wire.
Link — 1 turn No. 12, ⅜-inch diam.

6J5 socket. All connections of ground potential are made directly to the panel or case so that when the unit is assembled and fastened in place the connections will be made automatically.

Three lines of ¼-inch diameter holes, one along the top of the case and two along the rear panel, should be drilled in the box before construction starts. These holes provide ventilation and prevent excessive heat from causing possible failures in the waxed paper condensers.

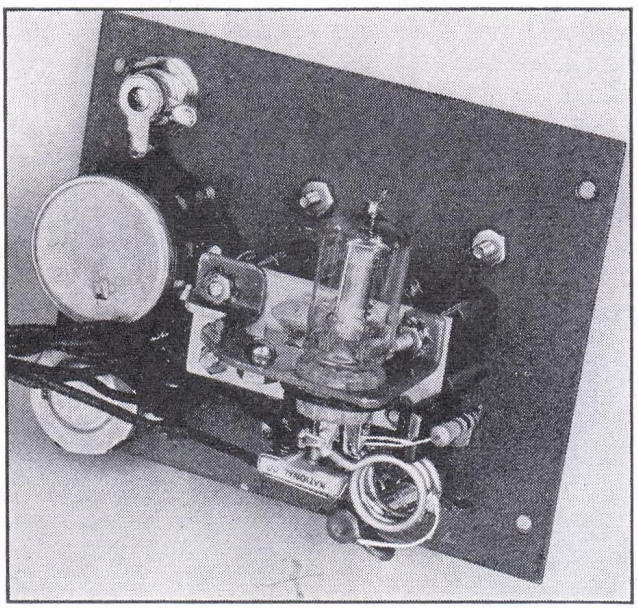

Fig. 1429 — Another view of the detector assembly shows the shape of the small metal bracket which supports the 9002 detector. The regeneration and audio volume controls are at the left — the audio gain control is the one at the bottom of the panel.

The receiver can be connected to the power supply and antenna to be used for testing before it is installed in the car. Testing in this manner allows accurate setting of the band and preliminary setting of the antenna coupling. The antenna coupling is finally adjusted so that the receiver will superregenerate well

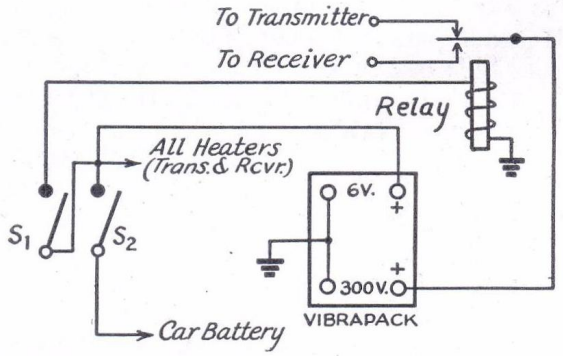

Fig. 1430 — Wiring diagram of the control circuit. S_1 and S_2 are mounted in the control box, along with the microphone jack and battery (see Fig. 1542), and the vibrator supply and the relay are mounted in the trunk compartment with the transmitter.
S_1 — S.p.s.t. toggle.
S_2 — S.p.s.t. heavy-duty toggle.
Relay — 6-volt s.p.d.t. relay.

over the whole range of the dial without any dead spots, but too loose coupling is to be avoided because it will reduce the sensitivity of the receiver. The adjustment that requires that the regeneration control be set towards the maximum end of its range before the set will superregenerate is the correct one.

The control unit shown in Fig. 1430 allows one switch to turn the receiver on and the transmitter off and vice versa. When putting the station into operation, S_1 should be closed

and then S_2 closed. Closing S_2 will put voltage on the heaters of both transmitter and receiver tubes, turn on the vibrator supply and close the relay. This last action places the plate voltage on the receiver. When switching over to "transmit", S_1 is opened, releasing the relay and placing the vibrator output on the transmitter. During a QSO it is only necessary to throw S_1 when changing from "receive" to "transmit" and back again. Separate antennas are recommended — one at the usual front position of the car for the receiver, and one at the rear of the car for the transmitter. The receiving antenna can be a ¼-wave or ½-wave vertical rod fed by concentric line. If a ½-wave antenna is used, it is advisable to make the length of concentric line an odd multiple of a quarter wavelength or else to adjust the length of the antenna for maximum coupling to the receiver.

If concentric-line feed from the antenna is used, it is recommended that concentric line with insulation over the outer conductor be used, with the outer conductor grounded at both the antenna end and the receiver end. If insulation is not used over the outer conductor, there is a good possibility that vibration of the car will cause occasional grounds at points along the outer conductor, and this will change the loading and tuning of the receiver during operation.

In general, noise reduction procedure is the same as that followed for automobile receivers for the broadcast band. Anything that contributes to quieter broadcast reception will help with the 112-Mc. operation but, since every car is practically an individual problem, no specific suggestions can be made.

If the car does not have a light located conveniently to the dash, the cap can be removed from the pilot light, and the lamp will give enough light by which to see the log book and note pad.

BIBLIOGRAPHY

[1] Grammer, "New Miniature U.H.F. Receiving Tubes in a 56- and 112-Mc. Converter," *QST*, September, 1941.

[2] Goodman, "A Practical 112-Mc. Converter," *QST*, March, 1940.

[3] Goodman, "Two U.H.F. Receivers Using the 9000 Series Tubes," *QST*, November, 1941.

[4] Goodman, "A 5-Mc. F.M. I.F. Amplifier," *QST*, April, 1940.

CHAPTER FIFTEEN

UHF Transmitters and Transceivers

ALTHOUGH most of the transmitters described in Chapter Eleven can be used on the 28-Mc. band, the long leads and high minimum capacities of the tuning condensers make it desirable to design special equipment for the 56-Mc. band. Further, the excitation requirements for the same tubes are usually higher on 28 and 56 Mc., and exciter units designed expressly for these ranges should be used. The general practice is, however, exactly the same, except that particular care must be taken in the layout of components (for short, direct leads) and in the selection of tubes. It is well to work with tubes designed for the higher frequencies.

Most of the 56-Mc. transmitters are shown with crystal control, for use with amplitude modulation. However, they can be adapted for f.m. by replacing the crystal with excitation from a f.m. oscillator similar to that described in Figs. 1519, 1520 and 1521. Higher-powered transmitters can be built by adding amplifiers to the units shown, basing the design of the amplifier on the medium-powered one described in Fig. 1516.

• A 10-WATT 56-MC. TRANSMITTER

The transmitter shown in Figs. 1501, 1502, 1503 and 1504 is an inexpensive affair using 6A6-type tubes throughout. As can be seen from Fig. 1503, one section of the first tube is used as a triode crystal oscillator on 7 Mc. while the second half doubles to 14 Mc. The two sections of the second tube are used as 28-Mc. and 56-Mc. doublers, and the third tube is a push-pull final amplifier. Capacitive interstage coupling is employed except between the 56-Mc. doubler and the grid circuit of the final, where inductive coupling is used.

In the oscillator, parallel plate feed permits grounding the rotor plates of the tuning condenser; since the following grid circuit is series-fed there is no essential difference in r.f. performance between this and the more common circuit with series plate and parallel grid feed. Cathode bias allows the tube to operate at low plate current; it is not necessary to work the oscillator very hard since the excitation requirements of the first doubler are rather low.

The 14- and 28-Mc. doubler circuits are identical except for the cathode resistor, R_2, in the first doubler stage. The second doubler uses no cathode bias because it is desirable to secure as much output as possible to drive the 56-Mc. doubler. Parallel plate feed is used in both stages.

The 56-Mc. doubler has series plate feed through an untuned plate coil. Since the coupling to the final grid circuit is fairly loose, the coil is made nearly self-resonant so that maximum energy transfer will result. The push-pull amplifier circuit is the standard arrangement for neutralized triodes.

Fixed or cathode bias is not required in the last three stages, either for operating or protective purposes. The plate currents of the 6A6s will not be excessive in the event that excitation fails or is purposely shut off. This is convenient in case the oscillator is to be keyed for c.w. work.

Meter switching with shunt resistors (R_7 to R_{12}, inclusive) provides for measuring plate

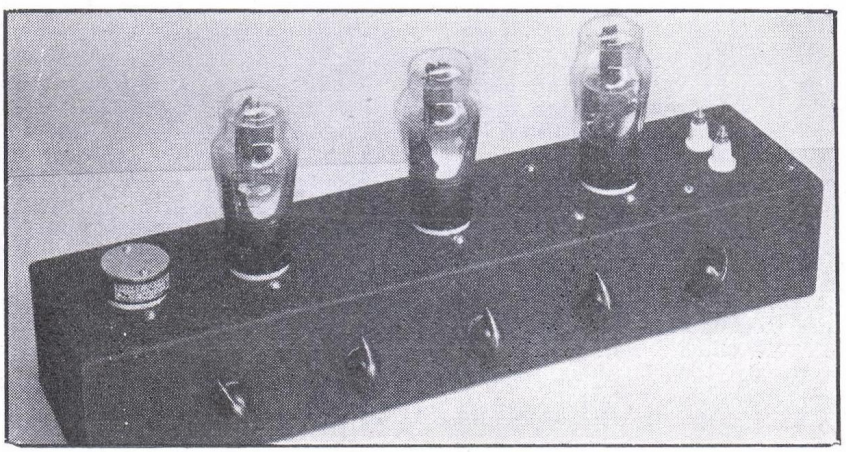

Fig. 1501 — In this front view the oscillator, doubler and amplifier tubes run from left to right. The crystal socket is at the left end of the chassis and the output terminals are at the right. Tuning controls are arranged in line along the front wall of the chassis.

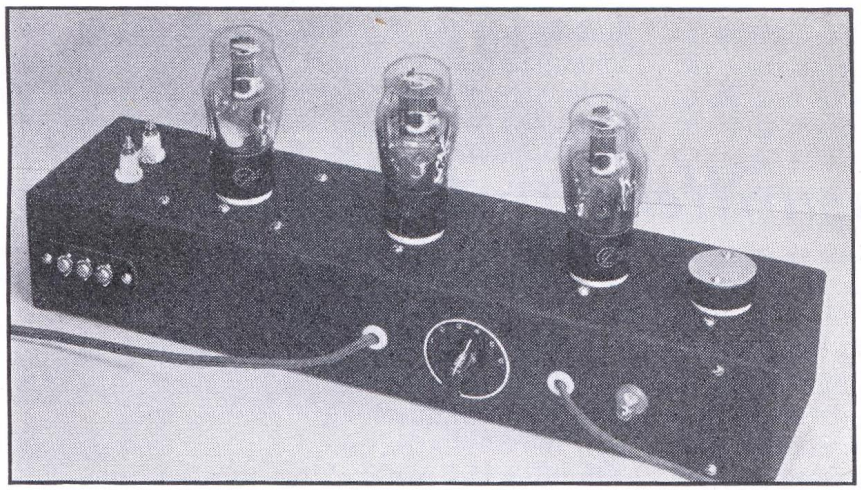

Fig. 1502 — The plate-voltage terminals are at the left in this rear-view photograph. The meter switch is flanked by the meter cord on the left and the 110-volt line cord on the right. The crystal-current bulb is mounted in a rubber grommet.

currents, although the meter is not incorporated in the transmitter itself.

The transmitter is built on a chassis measuring 3 by 4 by 17 inches. One tube is located at the exact center of the top and the other two are 4½ inches to the right and left, respectively. It is advisable to mount the oscillator and doubler tube sockets with the filament prongs toward the front of the chassis and the amplifier tube socket with its filament prongs facing the right end. This arrangement helps keep the r.f. wiring as simple and straightforward as possible. The crystal socket and output terminals are each centered 1¾ inches in from the ends of the chassis. The second doubler tuning condenser, C_3, is mounted in the center of the front wall of the chassis. The other variable condensers are to the left and right with 2¾-inch spacing between shaft centers. C_1, C_2 and C_3 are supported by the chassis wall

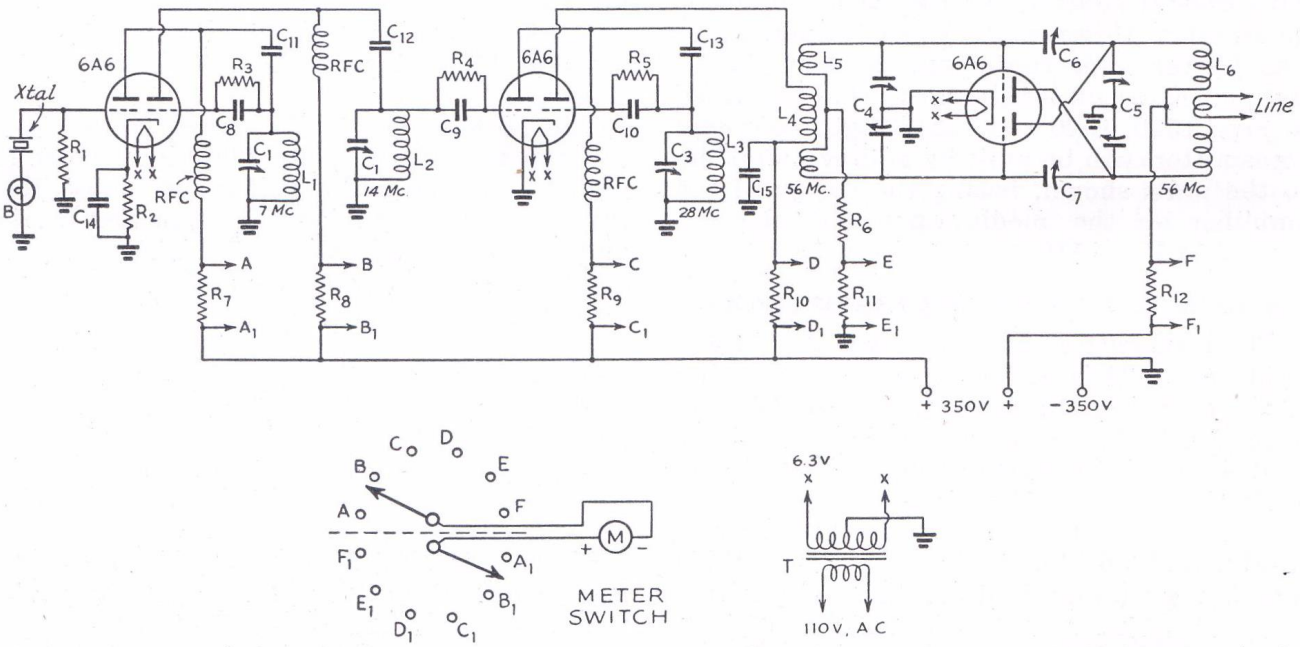

Fig. 1503 — Wiring diagram of the 56-Mc. exciter-transmitter.

C_1 — 50-μμfd. variable (Hammarlund HF-50).
C_2 — 35-μμfd. variable (Hammarlund HF-35).
C_3 — 15-μμfd. variable (Hammarlund HF-15).
C_4 — 50-μμfd. per section dual variable (Hammarlund HFD-50).
C_5 — 15-μμfd. per section dual variable (Hammarlund HFD-15-X).
C_6, C_7 — 3-30-μμfd. compression-type trimmer (National M-30).
C_8, C_9, C_{10} — 100-μμfd. midget mica.
C_{11}, C_{12}, C_{13}, C_{14}, C_{15} — 500-μμfd. midget mica.
R_1 — 15,000 ohms, ½ watt.
R_2 — 500 ohms, 1 watt.
R_3, R_4, R_5 — 30,000 ohms, ½ watt.
R_6 — 1000 ohms, 1 watt.
R_7, R_8, R_9, R_{10}, R_{11}, R_{12} — 25 ohms, ½ watt.
RFC — 2.5-mh. r.f. chokes (National R-100).
B — 60-ma. pilot bulb.
Sw — Two-circuit, 6-position selector switch (Mallory 3226-J).
T — 6.3-volt filament transformer (Thordarson T-19F81).
L_1 — 21 turns No. 22 d.s.c., close wound, 1-inch diam.
L_2 — 11 turns No. 22 d.s.c., 1 inch long, 1-inch diam.
L_3 — 6 turns No. 14, ¾ inch long, 1-inch diam.
L_4 — 9 turns No. 14, ⅝ inch long, ¾-inch diam.
L_5 — 2 turns No. 12 each side of L_4, 1-inch diam., center opening ¾ inch. Turns spaced diam. of wire.
L_6 — 3 turns No. 12 each side of coupling link, ⅞-inch diam., center opening ¾ inch. Turns spaced diam. of wire.
Link — 5 turns No. 12, ⅞-inch diam., ½ inch long.

but C_4 and C_5 are mounted on small metal pillars from the upper side of the chassis. This mounting brings the shafts of C_4 and C_5 in line with the other three.

Fig. 1502 shows the placement of parts on the rear wall of the chassis. Wiring to the meter switch is simplified if the switch is located 6½ inches in from the right-hand end, looking at the rear, where there is a comparatively open spot in the r.f. layout. This point is also convenient to the supply ends of the plate chokes in the first three stages, so that these chokes can be mounted directly to the switch. To save trouble the shunt resistors should be soldered to the switch contacts before the switch is mounted.

The filament transformer and crystal lamp are at the left end of the chassis in the bottom view. The transformer should be kept as far as possible to the left so that it will not be near the r.f. circuits. The lamp is held firmly in the grommet by stiff leads soldered to its base. The plate supply terminals are out of the way at the extreme left end of the base. Two positive terminals are provided so that a modulator transformer secondary may be connected in the plate lead of the final amplifier.

The rest of the parts are mounted so that r.f. leads will be short and direct; short leads are particularly important in the last two or three stages. The grid connections in the amplifier should be made directly between the grid prongs of the socket and the stator plate terminals of the grid tank condenser, which should be directly above the grid prongs if the unit is laid out as recommended. The plate prongs and the stator sections of C_5 should be cross-connected so that the neutralizing condensers, C_6 and C_7, may be supported by the condenser lugs as shown in Fig. 1504. This gives leads of negligible length and perfect symmetry, both of which contribute to good neutralizing. The padder-type condensers used for neutralizing may seem a bit unusual, but since the neutralizing capacity required is small the actual dielectric is mostly air, thus the effect of the mica is inconsequential. The small physical size of the condensers makes them ideally suited for the purpose. The output coupling coil has its ends soldered to lugs which are held in place by the feed-through terminals. The lugs will bend as the position of the coil is varied to change the coupling.

A power supply delivering 350 volts at 150 ma. is needed. Circuit performance is similar to that to be expected at the lower frequencies; each tank circuit will be in resonance when adjusted for minimum plate current to the tube with which it is associated. These currents should be 10, 18, 18 and 40 ma., in the order listed, for the first four stages. It is quite possible that the values will vary slightly in different layouts, but they should be approximately as given. Tuning of the various tanks should be adjusted to obtain maximum output from the 56-Mc. doubler, as indicated by maximum grid current in the final amplifier grid leak R_6. If no grid current is obtained it is probably an indication that the coupling between L_4 and L_5 is either too tight or too loose; this coupling is quite critical and therefore deserves careful adjustment. The amplifier grid current should be 25 ma. or more when the coupling is optimum. Each time the coupling is changed, condenser C_4, as well as the preceding tuning condensers, should be readjusted.

After a grid current indication is obtained the amplifier should be neutralized. Plate voltage should be removed from the amplifier but the rest of the circuits should be in normal operating condition. Start with the plates of the neutralizing condensers screwed up tight and then back off a full three turns on each condenser. This places the neutralizing capacities at approximately the correct values. Condenser C_5 is then rotated through resonance,

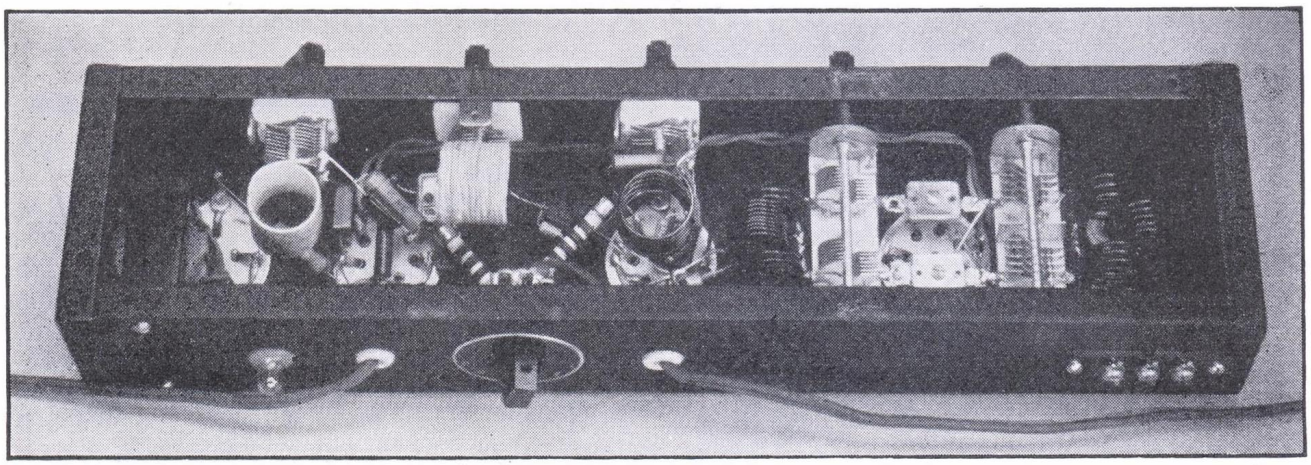

Fig. 1504 — **This bottom view shows how the tuning condensers are mounted with respect to the tube sockets. The self-supporting coils mount directly on the tuning condensers. The filament transformer is in the lower left-hand corner.**

which will be indicated by a kick in the grid current. Adjust the neutralizing condensers in small steps, turning both screws in the same direction and the same amount each time, until the grid current remains stationary when C_5 is rotated. This indicates complete neutralization. Retune the grid circuit after neutralization so that maximum excitation will be secured. It is also a good idea to recheck the coupling between L_4 and L_5 as described above, since neutralizing will change the load on the driver somewhat.

matching or tuning system is used. Systems employing a two-wire non-resonant line may be coupled directly to the output coil without tuning.

At the recommended input, 21 watts (60 ma. at 350 volts), the output as measured in a dummy antenna is something over 10 watts. For modulating the transmitter 100 per cent, an audio power output from the modulator of about 11 watts is required. The modulator output transformer must match an impedance of 5833 ohms (modulated amplifier plate voltage

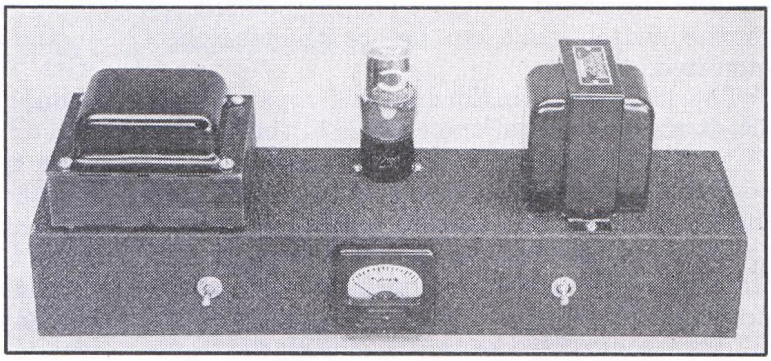

Fig. 1505 — The power supply chassis also houses the single milliammeter which serves for all plate current measurements in the transmitter.

Plate voltage may now be applied to the amplifier. With the plate tank tuned to resonance the plate current should fall to 20 or 25 ma. A load such as an antenna or feeder system, or a 10-watt lamp used as a dummy antenna, may be connected and the coupling adjusted until the plate current reaches the full-load value of 60 ma. The grid current will fall off to 10 ma. or so when the amplifier is loaded.

The transmitter output may be fed into any type of antenna providing an appropriate

divided by modulated amplifier plate current expressed in amperes). A 6000-ohm output winding will be close enough to provide a satisfactory match. A modulator using a Class-B 6A6 makes an excellent companion to the transmitter because it maintains the uniformity of tube types, and such a unit is described in Chapter Thirteen.

A power supply capable of supplying this transmitter is shown in Figs. 1505 and 1506. It is built on a 3- by 4- by 17-inch chassis and has provision for mounting a meter that can be switched to either the transmitter or the modulator for checking plate currents. The switch Sw1 is used to turn both the transmitter and the modulator on, since it is in parallel with the switch on the modulator power supply. (*Bib.* 1.)

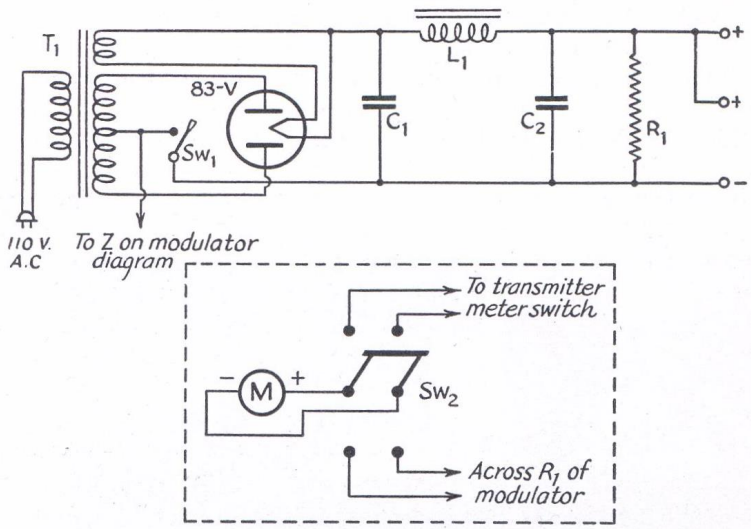

Fig. 1506 — Wiring diagram of the transmitter power supply.

C_1, C_2 — 8-μfd., 450-volt electrolytic.
R_1 — 25,000 ohms, 25-watt.
Sw_1 — S.p.s.t. toggle switch (see text).
Sw_2 — D.p.d.t. toggle switch.
M — 0–150 milliammeter.
T_1 — Power transformer, 750 volts at 180 ma., c.t.; 5 v. at 3 amp. (Thordarson T-13R09).
L_1 — Filter choke, 5 henrys, 200 ma., 80 ohms (Thordarson T-67C49).

• A 12-WATT 56-MC. TRANSMITTER FOR MOBILE WORK

The transmitter shown in Figs. 1507, 1508, 1509 and 1510 is designed to work from a power supply delivering 125 ma. at 325 volts and, since there are vibrator packs available which deliver this output, it is quite suitable for installation in a car for mobile work. Since maximum economy is desired in the exciter and audio stages, high-gain doubler tubes and Class-B audio for modulation are used.

From the diagram in Fig. 1508 it can be seen that a 6AG7 Tri-tet oscillator using a 7-Mc. crystal quadruples to

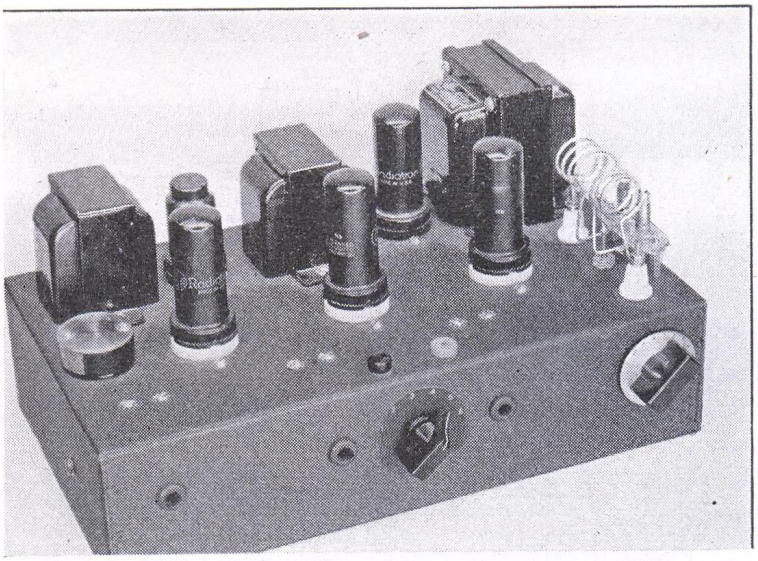

Fig. 1507 — A complete 12-watt 56-Mc. 'phone transmitter, ready for installation in car or home. The tubes along the front, from left to right, are 6AG7 Tri-tet oscillator, 6AG7 doubler and 6V6 final amplifier. The 6C5 driver (left) and the 6N7 Class-B modulator are at the rear between the transformers. The knob on the right controls the final tank condenser — the other tuning condensers are adjusted by screw driver through the rubber grommets. The meter switch is mounted on the front center, just under the meter pin jacks.

Note that the antenna coil is mounted on the antenna binding post strip — coupling is adjusted by swinging the coil.

drive a 6AG7 doubler to 56 Mc., and this latter tube drives a 6V6 amplifier on 56 Mc. A 6L6 can be substituted for the 6V6 but it gives no improvement in performance at the input (12 watts) the amplifier runs. Provision for neutralizing the 6V6 was included in the design of this unit but it was found unnecessary with this particular parts arrangement. It is not to be assumed, however, that the 6V6 will work well without neutralization in every arrangement — the necessary neutralizing capacity is small and is doubtless present in this layout as a stray capacity. The grid of the 6V6 is tapped down on the driver plate coil to lighten the loading and give a better match.

The modulation equipment consists of a 6C5 driver stage and a 6N7 Class-B modulator. Any arrangement except one using a single-button microphone would require more audio gain and hence more possibility of "hash" pick-up.

The transmitter is built on a 7- by 12- by 3-inch chassis, thus providing plenty of room for the parts. Reference to Figs. 1507 and 1509 will show the placement of parts, but some of the minor constructional points should be pointed out. The tuning condensers C_1, C_2 and C_3 are mounted on the underside of the chassis on the small brackets that are furnished with them, and they are set far enough back from the front so that the ends of the shafts do not quite touch the metal. They are adjusted by a screw driver that is prevented from shorting to the chassis by rubber grommets in the holes. The final tank condenser, C_4, is supported on the panel.

All of the inductances are mounted on or near their respective tuning condensers except the final tank coil, L_4, which is mounted above the chassis on feed-through insulators. This makes it more convenient to adjust the antenna coupling coil, L_5, after installing the transmitter in the car.

The plate circuits and the final grid circuit can be metered by plugging in the meter leads to the two pin jacks on the front center of the chassis and setting the meter switch to the proper position. This is a convenience when tuning up with a different crystal or antenna. The power leads are terminated at a four-prong plug mounted on the back of the chassis.

One problem in connection with mobile units is the drop in the line from the battery to the vibrator or motor-generator unit, and these leads must be kept as short as possible. This transmitter is intended to be mounted in the trunk rack of the car, with the control box mounted on the dashboard of the car and the vibrator pack mounted under the hood on the fire wall. This is, of course, for a car with the battery under the hood — for cars with the battery elsewhere the vibrator pack and control box might have to be mounted differently. There isn't too much drop in the leads running back to the heaters of the tubes from the battery if heavy wire is used, and the drop in the 325-volt line from the vibrator pack is negligible.

The wiring diagram of the control box is shown in Fig. 1510. As can be seen, the microphone battery is mounted in this box, and a jack is provided for the microphone. The switch Sw_1 turns on the vibrator pack and the heaters of the tubes, while switch Sw_2 is used as an "on-off" switch for the transmitter, since it controls the microphone battery and the plate supply lead. The control box is a small 4- by 4- by 2-inch box (Parmet MC-442) and takes up very little room.

An alternative system is to mount the vibrator pack and an additional storage battery in the trunk rack and to control both the "on-off" of the heaters and vibrator pack and of the plate power through suitable relays controlled from the dash. However, the storage battery must be removed from the car for charging, and thus the installation may not be always "ready to go."

The adjustment of the transmitter is conventional in every way and it should not be neces-

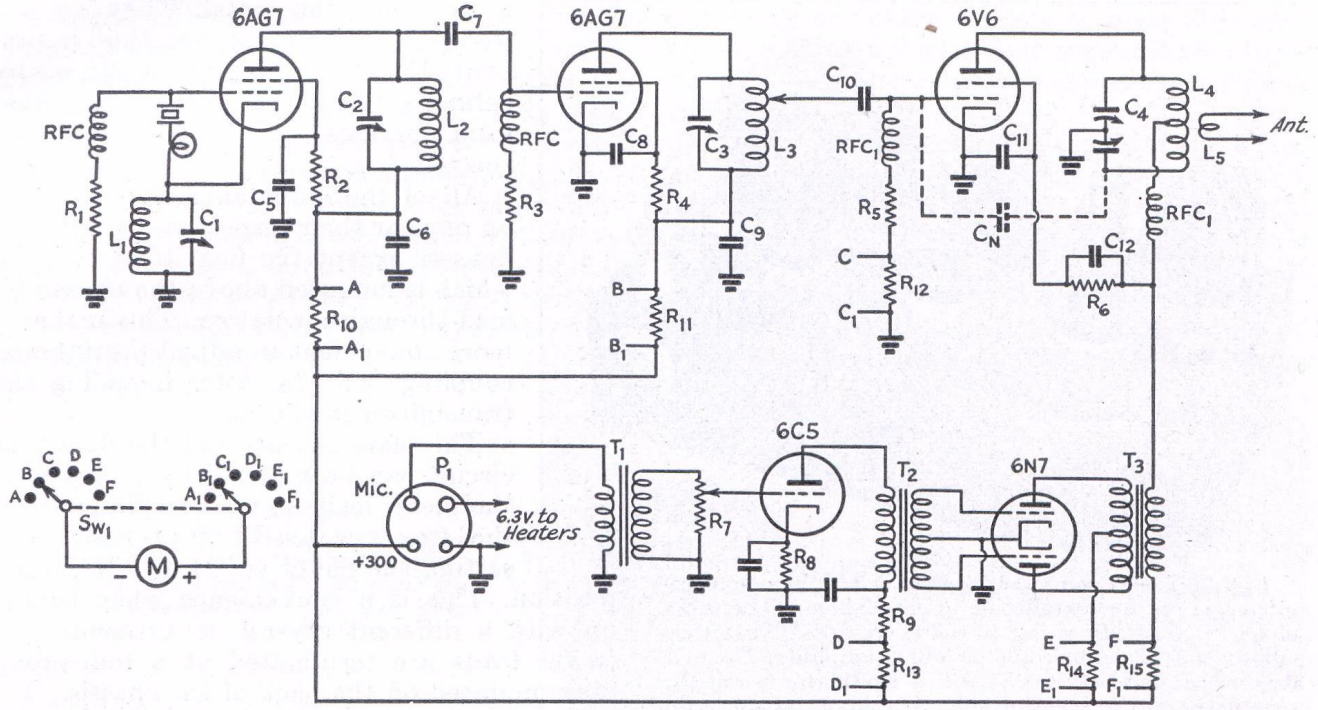

Fig. 1508 — Wiring diagram of the 56-Mc. 'phone transmitter.

C_1 — 50-$\mu\mu$fd. variable (National UM-50).
C_2, C_3 — 25-$\mu\mu$fd. variable (National UMA-25).
C_4 — 30-$\mu\mu$fd. per section variable (Hammarlund HFD-30-X).
C_5, C_8 — 0.01-μfd., 400-volt paper.
C_6, C_9, C_{11} — 0.002-μfd. mica.
C_7, C_{10} — 250-$\mu\mu$fd. mica.
C_{12}, C_{14} — 8-μfd., 450-volt electrolytic.
C_{13} — 25-μfd., 25-volt electrolytic.
CN — See text.
R_1, R_3 — 0.2 megohms, 1 watt.
R_2, R_4 — 40,000 ohms, 1 watt.
R_5 — 3,000 ohms, 1 watt.
R_6 — 5,000 ohms, 2 watt.
R_7 — 0.1-megohm volume control.
R_8 — 1000 ohms, ½ watt.
R_9 — 6000 ohms, 1 watt.
R_{10}–R_{15} — 25 ohms, ½ watt.
RFC — 2.5-mh. r.f. choke (National R-100U).
RFC_1 — U.h.f. r.f. choke (Ohmite Z1).
Sw_1 — 2-circuit, 5-position rotary switch, non-shorting (Mallory 3226J).
T_1 — Microphone transformer (Stancor A-4726).
T_2 — Driver transformer (Stancor A-4721).
T_3 — Modulation transformer (Stancor A-3845).
L_1 — 19 turns No. 18 enam., spaced slightly to occupy ⅜-inch winding length, on ¾-inch diam. form (National PRF-2).
L_2 — 8 turns No. 14, spaced to occupy 1⅞ inch, ⅞-inch diam., self-supporting.
L_3 — 3½ turns No. 14, spaced to occupy ⅞ inch, ⅞-inch diam., self-supporting. 6V6 grid tap 1 turn from plate end.
L_4 — 3 turns No. 14, each side center, spaced to occupy ¾ inch, ⅞-inch diam.
L_5 — 2 turns, No. 14, ⅞-inch diam.
P_1 — 4-prong base-mounting plug (Amphenol RCP-4).
Lamp in series with crystal is 60-ma. dial light.

sary to repeat here how to tune a crystal-controlled transmitter. With 325 volts from the power supply, the total plate and screen currents of the 6AG7 Tri-tet and the 6AG7 doubler will be 12 and 16 ma. respectively, and the final grid current should run about 2 ma. If, when the voltage is removed from the screen and plate of the 6V6 final, there is no flicker in the grid current as the final tank is tuned through resonance, there is no need to worry about neutralizing the final amplifier. However, if a flicker (of 0.1 ma. or so) does show up, the amplifier can be neutralized readily by running a stiff wire from the free end of the final tank over near the grid terminal on the 6V6 socket to form a neutralizing condenser (shown by dotted lines in Fig. 1508). The stage is then neutralized in the usual manner, varying the neutralizing capacity by moving the free end of the wire. Connecting the voltage to the screen and plate of the 6V6 and tuning to resonance, the total plate and screen current should run under 35 ma. unloaded and about 39 or 40 ma. loaded.

The 6C5 plate current will run around 8 ma., the no-signal 6N7 plate current around 35 ma., kicking up to about 50 ma. on peaks.

The antenna can be anything from 0.25- to 0.6-wavelength long, depending upon what one has available. Since the transmitter can be mounted close to the end of the antenna, there is no particular problem in feeding the antenna aside from finding a suitable insulator to run through the side of the car. If something near a quarter-wavelength long is used for the antenna, one side of the antenna coil, L_5, should be grounded to the car and a variable condenser connected in series with the antenna and the other side of L_5. When the antenna is near a half-wavelength long, parallel tuning of L_5 should be used. The center of L_5 can be grounded or the whole thing can be left floating. Regardless of the length of antenna, the antenna coupling is varied by movement of L_5

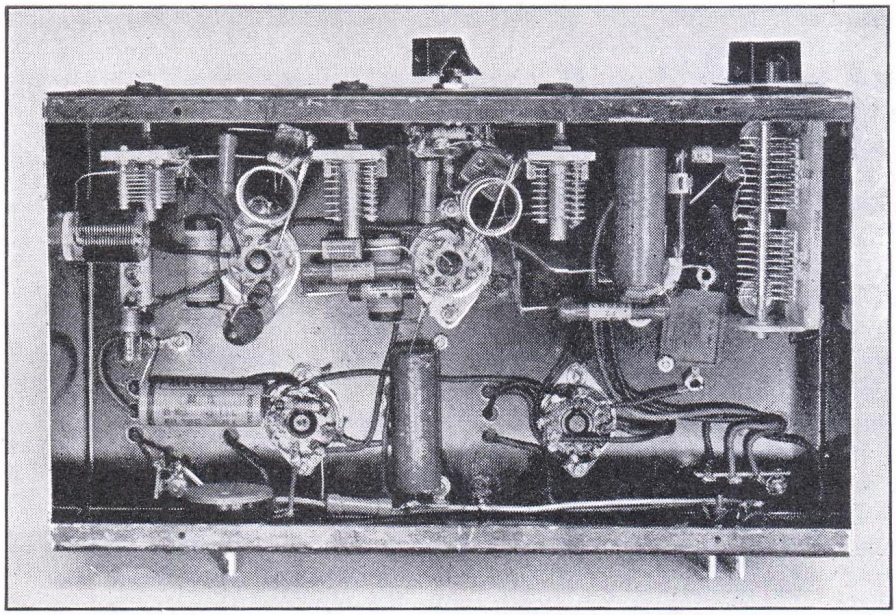

Fig. 1509 — A view under the chassis of the 56-Mc. transmitter shows the straightforward arrangement of parts. The coils L_2 and L_3 are self-supporting and are mounted on their respective condensers. Note the audio volume control and the power supply plug mounted at the rear of the chassis. The microphone lead from the plug to the microphone transformer is run through grounded shield braid.

with respect to L_4 after tuning both amplifier and tank circuit to resonance. (*Bib.* 2.)

• A THREE-BAND 815 TRANSMITTER

The 815 double beam-power tube is useful in u.h.f. applications, and Figs. 1511, 1512, 1513 and 1514 show a transmitter using an 815 in the output stage on 28, 56 and 112 Mc.

The 815 can be used on the lower frequencies without neutralization, but in the u.h.f. range above 28 Mc. the high gain of the tube plus its grid-plate capacity of 0.2 μμfd. requires neutralization except where the grid circuit is heavily loaded (has low Q). However, neutralization is a simple matter and yields an amplifier that can be modulated 100% without any indication of regeneration, with no fixed bias necessary to hold down the tube.

As can be seen in Fig. 1512, a 7N7 double triode is used as the oscillator and first doubler, and this is followed by a 7C5 (loktal 6V6) second doubler which drives the 815 as a neutralized amplifier on the three bands. With the arrangement as shown, a 7-Mc. crystal is used for 28-Mc. operation, a 14-Mc. crystal for 56-Mc. operation, and a 28-Mc. crystal for 112-Mc. operation. Anyone interested in using only 7-Mc. crystals can include the necessary extra doubler stages without any trouble. It is possible to quadruple in the stage following the crystal oscillator, and thus use a 7-Mc. crystal for 56-Mc. operation, but everything has to be cranked up to the last notch and it is hardly worth while. As it is, the 7N7 and 7C5 run smoothly with 275 volts on the plate (dropped to 200 on the oscillator) and no crowding is necessary. More than enough excitation is obtained on 28 and 56 Mc., but this is easily controlled by adjusting the coupling between coils, as will be explained later.

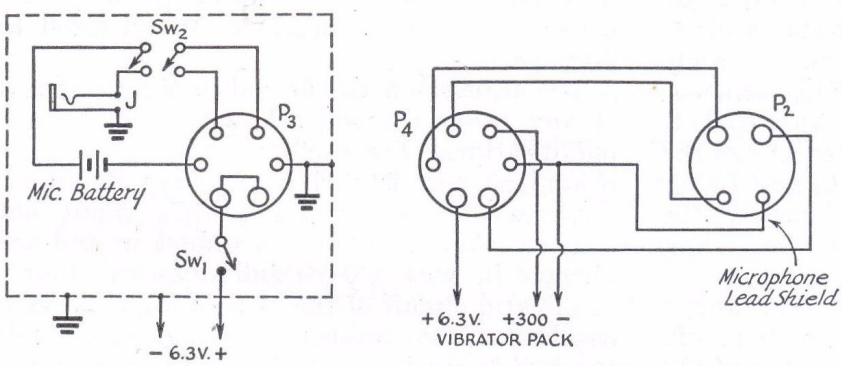

Fig. 1510 — Circuit diagram of control box.
J — Small microphone jack (Mallory 702B).
Sw_1 — D.p.s.t. high-current toggle with sections in parallel.
Sw_2 — D.p.s.t. toggle.
P_2 — 4-prong cable socket (Amphenol PF-4).
P_3 — 6-prong cable plug (Amphenol RCP-6).
P_4 — 6-prong socket (Amphenol PF-6).
Battery is Burgess 3A2. Microphone lead is shielded throughout.

The final tank circuit uses the usual coil-and-condenser combination for 10- and 5-meter operation and a parallel-line tank for 112 Mc. The tuning condenser used on the lower frequencies is mounted on a metal bracket which plugs into the chassis, thus making it possible to remove this assembly and plug in the parallel lines used on the highest frequency. The parallel lines are tuned by adjusting a sliding jumper, and the antenna line taps on to the tank lines through small fixed condensers. While a coil and condenser can be used with fair efficiency at 112 Mc., the parallel-line tank

results in lower losses and consequently higher output.

The 815 is readily neutralized by using small tabs of copper supported on stiff wires close to the plates of the tube. The plate acts as the other half of the neutralizing condenser, and the combination gives about the shortest leads possible. This construction adds no expense to the unit, unless one considers the two small ceramic bushings (Millen 32150) through which the wires are run. Neutralizing consists simply of moving the copper tabs with respect to the tube plates until the stage is neutralized, as indicated by no reaction on the grid current when the plate circuit is tuned through resonance (with plate and screen voltage off).

Jacks are provided for metering grid and plate current in the driver and final stages.

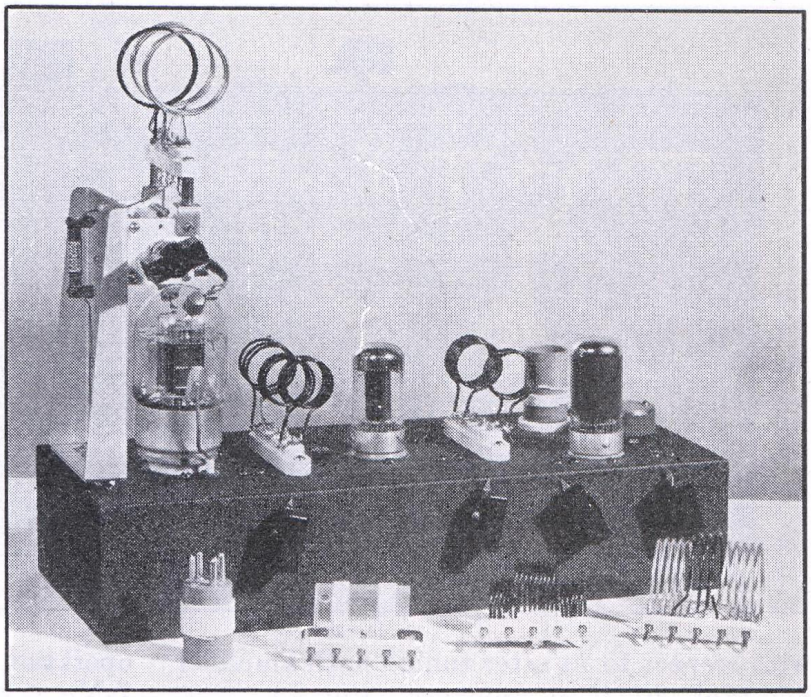

Fig. 1511 — The 815 transmitter with the 56-Mc. coils in place. The 815 amplifier is at the left, the 7C5 driver in the center, and the 7N7 oscillator-doubler at the right. The panel controls, from left to right, are final grid, second doubler grid, first doubler plate and oscillator plate. The spare set of coils is used on 28 Mc.

The transmitter is built on a 6- by 14- by 3-inch chassis, and reference to Figs. 1511, 1513 and 1514 will show how the various components are arranged. The tuning condensers on the chassis are mounted on the small brackets that are available for the Cardwell Trim-Air condensers. Low-loss bakelite loktal sockets are used for the exciter portion, and a ceramic octal socket is used for the 815. The oscillator coil, L_1, plugs into a four-prong ceramic socket, and Millen 41205 sockets, mounted above the chassis, are provided for coils L_2-L_3 and L_4-L_5. A third 41205 socket, mounted below the chassis, is used to plug in the final tank assembly.

The condenser used to tune the final tank is mounted on a bracket of aluminum that will support the condenser just over the top of the 815. Two copper straps, wrapped around the center of the rotor and fastened to the end-plate spacer bars, provide a central rotor contact that keeps the final tank circuit perfectly symmetrical. Another 41205 socket, supported on this condenser by brass brackets and spacers, provides a socket for the final amplifier coils. A Millen 40205 plug fastened to the bottom of the aluminum bracket holds the assembly in place and provides a connection for the d.c. plate voltage and a ground connection for the aluminum bracket. The 112-Mc. parallel-line tank similarly is mounted on a 40205 plug.

The heater current and low-voltage plate current are introduced at the rear of the set through a four-prong plug, while the high voltage plus modulation is introduced through a separate safety terminal. The two grid-current jacks are mounted directly on the rear of the chassis, and the two plate-current jacks are mounted on a strip of bakelite supported away from the chassis by brass pillars, for safety and better insulation than could be provided by fibre washers.

The adjustment of the coils is similar to that of any other transmitter, with a few minor modifications. The oscillator plate coil, L_1, is wound as specified, and the crystals should oscillate with the condenser C_1 about half meshed. Coils L_2 and L_3 are next wound and plugged in, with a 0–10 milliammeter plugged in the grid circuit of the 7C5. With the crystal oscillating (as indicated by a neon bulb touched to the "hot" end of L_1 or by monitoring the signal in the receiver), C_2 and C_3 should be tuned for grid current to the 7C5. It will be found that there is some interlocking of the tuning of these two condensers when the coupling is too tight between L_2 and L_3, and the two coils should be moved in relation to each other until practically "one-spot" tuning is obtained. The grid current to the 7C5 should run from 1.5 to 2 ma., with 275 volts applied to the 7N7. Next, L_4 should be wound, leaving off L_5 for the time being, since L_4 is to be made self-resonant. If it is self-resonant, as indicated by a neon bulb touched to the plate end, L_5 can be wound on, but if it isn't, the turns should be pushed together or pulled apart until signs of r.f. can be seen. When L_5 is added, the coupling should be made rather loose at first, since it will be found that there is more than

enough drive available, as indicated by the grid current to the 815. The coils can be coupled until about 6 or 7 ma. of grid current flow in the 815. It will not normally be possible to obtain more than 4 to 5 ma. of grid current on 112 Mc., even with the coils tightly coupled, but this is still sufficient to drive the 815. The plate current of the 7C5 will run from 35 to 40 ma.

When grid current has been obtained in the 815 stage (with no plate or screen voltage applied), the tank circuit can be tuned through resonance, as indicated by a sharp flicker of the grid current. The plates of the neutralizing condensers can then be moved in relation to the tube until no flicker can be seen, indicating that the tube is neutralized. Neutralization should always be checked when shifting from one band to another, since an accidental jar of the tube or some unbalance in the stage may affect the adjustment. If the stage is correctly neutralized, it will be possible to apply several hundred volts (more might injure the tube) to the screen and plate and, with no bias, excitation off and the plate tank unloaded, have no signs of r.f. anywhere in the circuit with any setting of the tank condenser. Unless the stage is neutralized, it will be impossible to modulate the amplifier fully without distortion, as is the case in any modulated amplifier.

When the amplifier has been neutralized, plate voltage can be applied with the excitation on, and the amplifier can be loaded up to its rating of 150 ma. at 400 volts. About thirty watts of audio power will be required to modulate the stage.

The linear tank is tuned by sliding the shorting bar (two National metal-tube grid caps soldered together) up and down the bar until resonance is indicated. The bar has plate voltage on it, and all tuning should be carefully

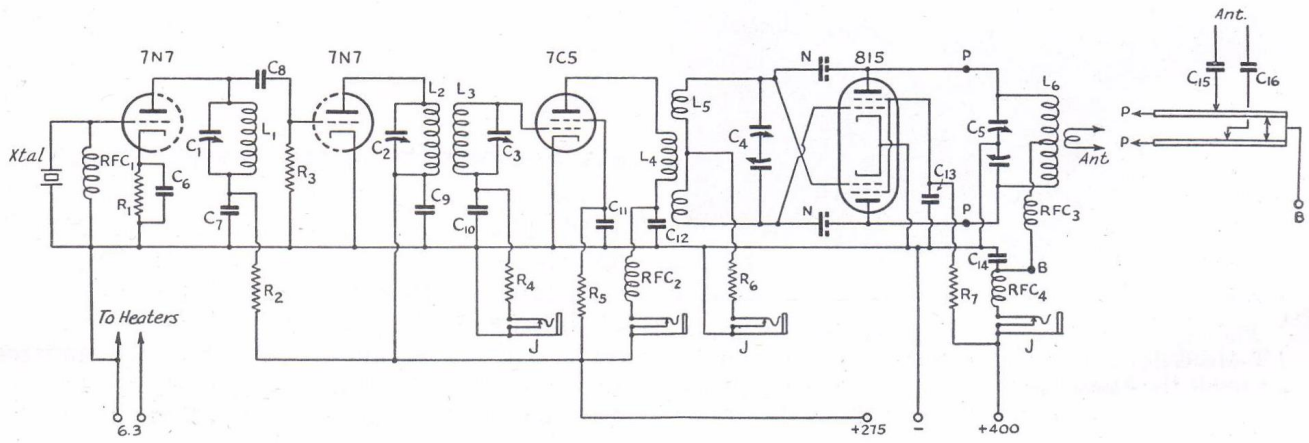

Fig. 1512 — Circuit diagram of the 815 u.h.f. transmitter.

C_1, C_2 — 75-$\mu\mu$fd. midget variable (Cardwell ZU-75-AS).
C_3 — 25-$\mu\mu$fd. midget variable (Cardwell ZR-25-AS).
C_4 — 15-$\mu\mu$fd. per section dual midget variable (Cardwell ER-15-AD).
C_5 — 15-$\mu\mu$fd. per section dual midget variable, 0.07 spacing, modified. (Cardwell ET-15-AD.) See text.
C_6, C_7, C_9, C_{10}, C_{11} — 0.005-μfd. midget mica.
C_8 — 100-$\mu\mu$fd. midget mica.
C_{12} — 250-$\mu\mu$fd. midget mica.
C_{13}, C_{15}, C_{16} — 0.001-μfd. mica.
C_{14} — 0.001-μfd. mica, 2500-volt rating.
N — Small copper tabs, ½- by ¾-inch. See text.
R_1 — 300 ohms.
R_2 — 5000 ohms, 10-watt wirewound.
R_3 — 50,000 ohms.
R_4 — 75,000 ohms.
R_5 — 12,000 ohms.
R_6 — 15,000 ohms.
R_7 — 15,000 ohms, 10-watt wirewound.
All resistors 1 watt unless otherwise mentioned.
RFC_1 — 2.5-mh. r.f. choke (National R-100).
RFC_2, RFC_3, RFC_4 — U.h.f. r.f. choke (Ohmite Z-1).
J — Closed-circuit jack.

L_1 — 7-Mc. crystal: 18 turns No. 22 d.c.c. closewound.
14-Mc. crystal: 7 turns No. 22 d.c.c. closewound.
28-Mc. crystal: 4 turns No. 18 enam., spaced to occupy ⅝ inch.
All L_1 wound on 1-inch diam. plug-in form (National XR-1).

L_2 — 14 Mc.: 8 turns No. 22 d.c.c. closewound on 1¼-inch diam. form.
28 Mc.: 5 turns No. 14 enam., spaced to occupy ½ inch, self-supporting, 1-inch diam.
56 Mc.: 4 turns No. 14 enam., spaced to occupy ½ inch, self-supporting, ¾-inch diam.

L_3 — 14 Mc.: 9 turns No. 22 d.c.c. closewound ⅝ inch from L_2. (Wound on Millen 43001 form.)
28 Mc.: 7 turns No. 14 enam. spaced to occupy 1 inch, self-supporting, 1-inch diam.
56 Mc.: Same as L_2.

L_4 — 28 Mc.: 9 turns No. 14 enam., spaced to occupy 1 inch, self-supporting, 1-inch diam.
56 Mc.: 5 turns No. 14 enam., spaced to occupy ⅞ inch, self-supporting, 1-inch diam.
112 Mc.: 3 turns No. 12, spaced diam. of wire, self-supporting, ⅝-inch diam.

L_5 — 28 Mc.: 5 turns No. 14 enam. each side of L_4, self-supporting, same diam. and spaced to occupy ½ inch.
56 Mc.: 3 turns No. 14 enam. each side of L_4, self-supporting, same diam. and spaced to occupy ¾ inch.
112 Mc.: 1 turn No. 14 each side of L_4, same diam.

L_6 — 28 Mc.: 10 turns No. 12, spaced wire diam., self-supporting, split in center for ¾ inch for coupling link 1¾-inch diam.
56 Mc.: 4 turns No. 12 spaced twice wire diam., self-supporting, split in center for ½ inch for coupling link, 1¾-inch diam.
112 Mc.: 17 inches ¼-inch copper tubing spaced ¼ inch.

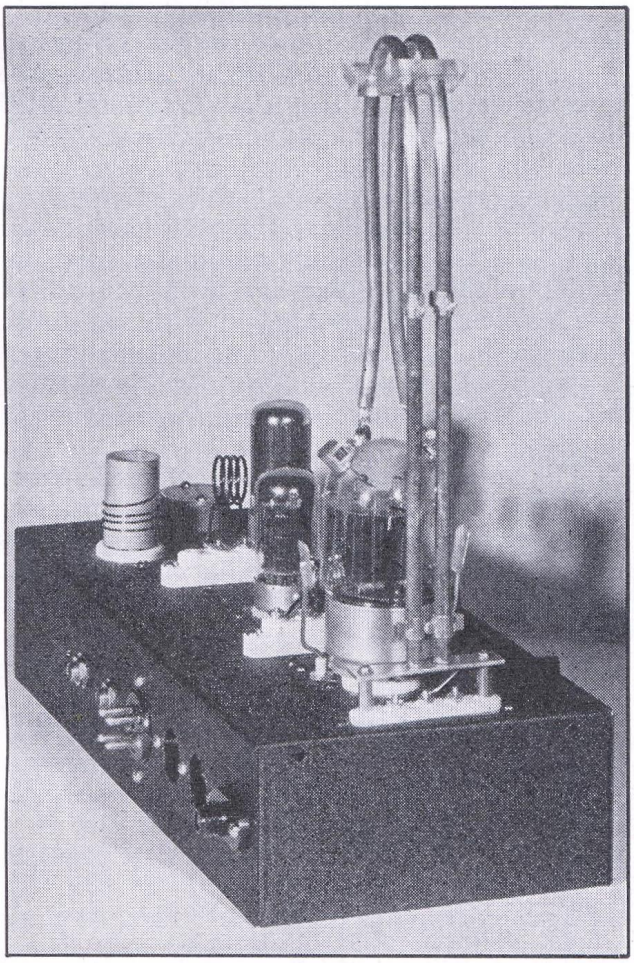

Fig. 1513 — Another view of the transmitter with the 112-Mc. coils and final tank in place. Note the small tabs alongside the 815 that are used for neutralizing and the meter jacks and power-supply terminals at the rear of the chassis.

done with an insulated screwdriver. The antenna coupling is obtained from two similar grid caps that are slid up and down the lines until proper loading is obtained.

If f.m. is to be used on the 5- or 2½-meter band, the frequency-modulated oscillator can be coupled in through several turns around L_1, with the crystal removed from its socket. An f.m. oscillator is described in Figs. 1519, 1520 and 1521.

As mentioned before, more than enough excitation is available on the 10- and 5-meter bands, but there is no advantage in running the grid current above 4 or 5 ma., since the output will not increase and the linearity of the amplifier is good with only 3 to 4 ma. grid current. The output of the transmitter could not be measured accurately at anything higher than 28 Mc. (where it was close to 40 watts) but, with the lamp loads used, it appears to be about 35 watts on 56 Mc. and 30 on 112 Mc., at the rated input of 60 watts.

A 275-volt and a 400-volt power supply are required for this transmitter. Figs. 1237 and 1215 show power supplies that will fill the bill, although the voltage from the supply of Fig. 1215 as shown will be too high, and a lower-voltage transformer should be substituted. A pair of 6L6s in Class AB_1 will furnish enough audio power to modulate fully the 815, and such a modulator is described in Fig. 1311. (*Bib.* 3.)

• A 300-WATT 56-MC. AMPLIFIER

The 56-Mc. amplifier shown in Figs. 1515, 1516, 1517 and 1518 uses a pair of 35Ts or 35TGs running at 200 ma. with 1500 volts on the plates. With approximately 25 to 30 watts of driving power, the efficiency and performance will be excellent. The 815 transmitter shown in Fig. 1511 is well suited for the job, although any exciter of comparable output will serve to excite the amplifier.

The amplifier is built on a 5½- by 9½- by 1½-inch chassis and is designed to be mounted on a panel of metal or Presdwood. Two panel brackets are used, one at each end of the chassis, and the plate tuning condenser, C_2, is mounted on one of the brackets and insulated from it by small steatite bushings. The grid tuning condenser, C_1, is mounted on the

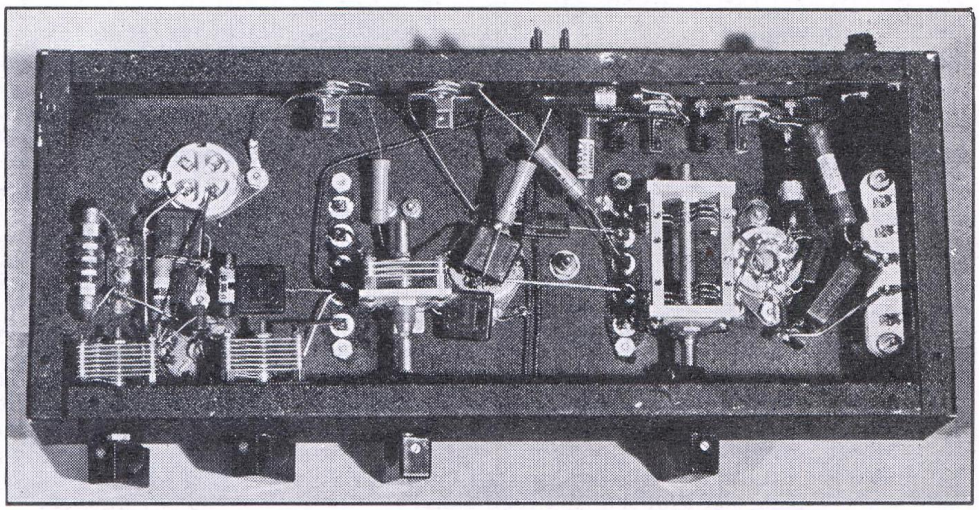

Fig. 1514 — A view underneath the chassis shows the placement of parts. By-pass condenser leads are made as short as possible, and most of the r.f. leads are made with heavy wire.

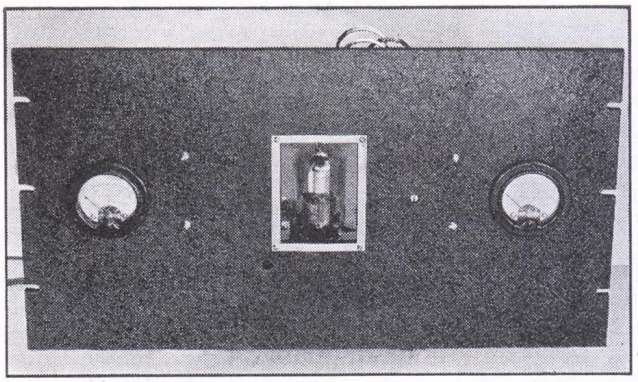

Fig. 1515 — The 300-watt 56-Mc. amplifier is built on a chassis which is supported by a Presdwood panel. The grid and plate tuning condensers are adjusted by an insulated screwdriver through holes in the panel.

chassis and the rotor is left unconnected. The grid and plate tuning condensers are adjusted by an insulated screwdriver through holes in the panel, although dials on insulated extension shafts could be used.

The plate tank coil is mounted on a Millen 40205 plug, and the corresponding socket is supported on the tank condenser by two small brass angles. The grid coil is mounted on a National PB-16 plug, and its socket is raised above the chassis by small steatite stand-off insulators.

The neutralizing condensers are made from small tabs of aluminum with approximately one square inch of active area supported about $\frac{3}{16}$-inch apart on individual steatite pillars or bushings. If 35Ts are used, as shown in the photographs, the lower neutralizing condenser plates are mounted on through bushings that run through the chassis to the grid terminals on the sockets. If 35TGs are used, it is not necessary to carry the grid leads through the chassis. In either event, the grid leads are crossed from the neutralizing condensers, to provide the proper phasing for neutralization.

The chassis is fastened to the front panel by the brackets mentioned above. The two meters are mounted on the panel outside of the brackets, and a square hole in the center of the panel allows the tubes to be observed during operation. A National 3- by 4-inch coil chart frame is used to outline the rectangular hole.

Leads for the excitation are brought to two binding posts mounted on the panel bracket at the grid end of the chassis, and the output leads are run to an antenna tuning unit from the terminals on the plate coil socket. If desired, the antenna tuning unit can be mounted directly above the amplifier, or it can be mounted on the wall at the point where the antenna leads come through the house.

If sufficient excitation is available, the grid current will run 55 ma. or more when the plate circuit is loaded to 200 ma. at 1500 volts. The amplifier can be loaded to 225 ma. or higher if the excitation doesn't drop below this value with the increased plate loading. The plates of the tubes will run a dull red under normal operation, and if the two tubes do not show the same color it indicates an unbalance in the circuit that must be corrected. However, the amplifier is laid out in such a fashion that no trouble from this source should occur. At 300 watts input, approximately 150 watts of audio power is required to modulate fully the output of the amplifier, and a pair of HY40Zs is recommended for the modulator. A suitable power supply, delivering the necessary 200 ma. at 1500 volts, can be built along the lines of the supply described in Fig. 1246, substituting lower-current chokes and transformer.

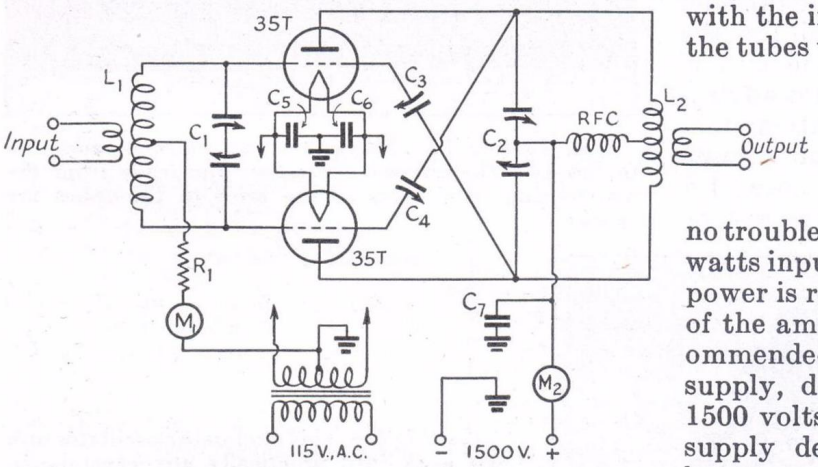

Fig. 1516 — Wiring diagram of the 300-watt 56-Mc. amplifier.

C_1 — 25-$\mu\mu$fds. per section dual (Cardwell ER-25-AD).
C_2 — 35-$\mu\mu$fds. per section dual, rotor contacted at center (Millen 13035).
C_3, C_4 — Homemade neutralizing condensers. See text.
C_5, C_6 — 0.001-μfd. mica.
C_7 — 0.001-μfd. mica, 5000 volts.
R_1 — 2500 ohms, 10 watts.
L_1 — 6 turns No. 12, $\frac{3}{4}$-inch diam., spaced to occupy $\frac{7}{8}$ inch. Link is 2 turns No. 14, $1\frac{1}{2}$-inch diam.
L_2 — 4 turns No. 12, $1\frac{1}{2}$-inch inside diam., spaced diam. of wire with $\frac{3}{4}$-inch gap in middle to accommodate 3-turn swinging link of No. 14.
M_1 — 0–100 or 0–150 milliammeter.
M_2 — 0–300 milliammeter.
T_1 — 5-volt 8-ampere transformer (Thordarson T-19F84).

• AN F.M. MODULATOR-OSCILLATOR UNIT

If one already has a crystal- or e.c.o.-controlled transmitter for the 28-, 56- or 112-Mc. band it is a relatively easy matter to disconnect the modulator and substitute for the crystal or e.c.o. the f.m. oscillator-modulator shown in Figs. 1519, 1520 and 1521. The r.f. output of the unit is intended to be fed through a link to a tuned circuit which substitutes for the crystal in the crystal oscillator. This tuned circuit is resonant at the same frequency as the output tank of the control unit, L_2C_3 in

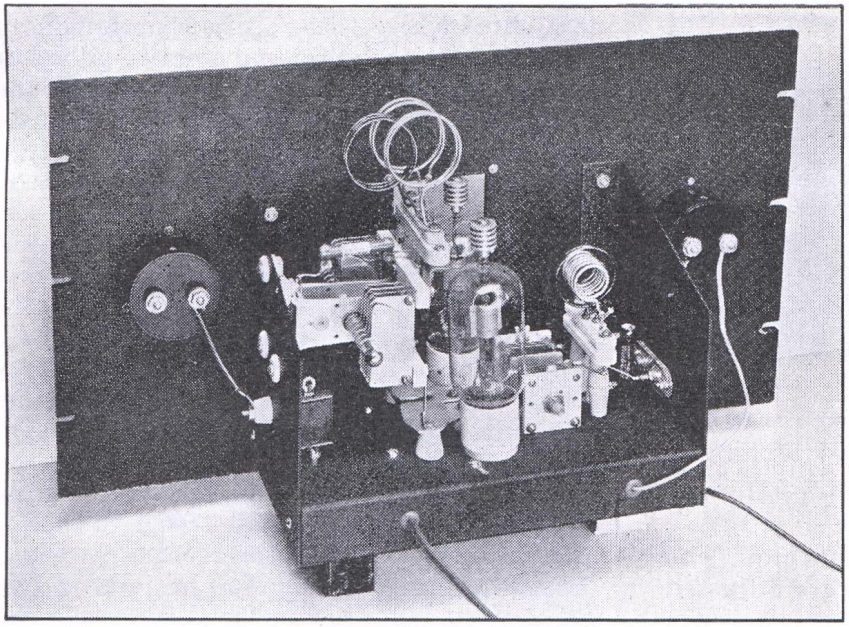

Fig. 1517 — A view behind the panel of the 300-watt amplifier shows the plate tuning condenser mounted on the panel bracket and gives a good idea of the construction of the neutralizing condensers. The plate coil socket is supported on the plate tuning condenser by two brass angles.

Fig. 1520, and is in fact identical with it in construction. In transmitters using triode or pentode crystal oscillators in which the tubes are not well screened, it is advisable to use the crystal oscillator tube as a doubler rather than as a straight amplifier. If the transmitter uses a 7-Mc. crystal oscillator, for instance, the output of the unit can be on 3.5 Mc. and the grid circuit of the ex-crystal tube tuned also to 3.5 Mc. This will avoid difficulty with self-oscillation in the ex-crystal tube. With a pentode oscillator it is possible to work straight through provided the grid tank substituted for the crystal is tuned well on the high-frequency side of resonance, but this procedure is not advisable since it may make the modulation nonlinear. It is rather important that all circuits in the transmitter be tuned "on the nose" for best performance. Of course, if the crystal tube

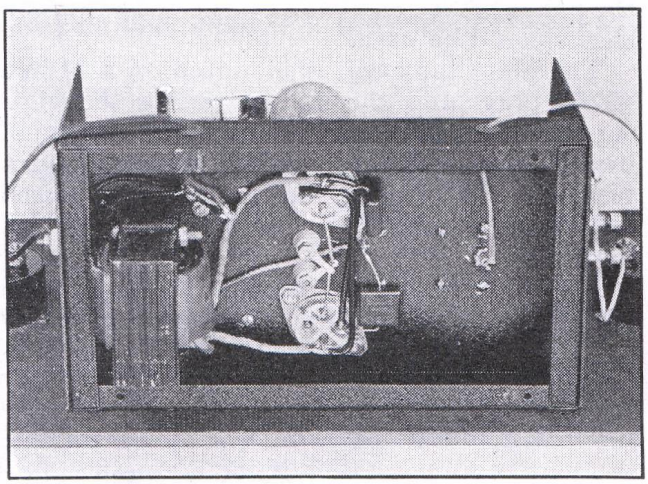

Fig. 1518 — The filament transformer is mounted underneath the chassis. Note how the leads from the neutralizing condensers to the grids of the tubes are crossed.

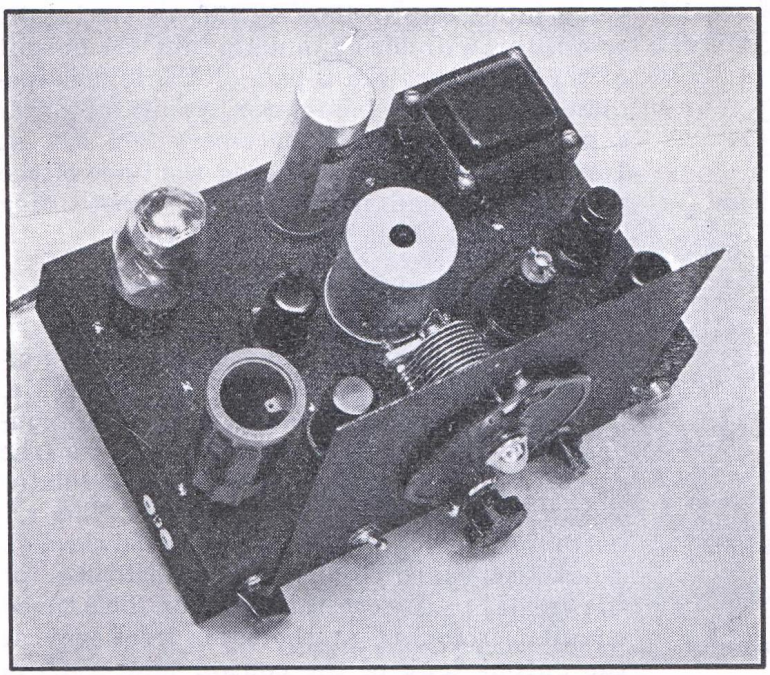

Fig. 1519 — This modulator-oscillator unit can work into practically any crystal-controlled 56-Mc. transmitter for frequency-modulated output. It contains a speech amplifier and power supply, so that no additional equipment is needed.

The oscillator coil is in the round shield can in the center. The coil in the left foreground is the buffer output circuit. Speech amplifier and modulator are at the right, with the power supply along the rear edge. A 7 by 11 chassis is used.

is a well-screened transmitting type it can be used as a straight amplifier.

With harmonic-type oscillators the input frequency can be the same as that of the crystal, since the output frequency of the crystal tube is already a harmonic. In the Tri-tet the cathode tank should be short-circuited; in the types using a cathode impedance to provide feedback this impedance also should be shorted. Care should be taken to avoid short-circuiting the grid bias, whether from a cathode resistor or grid leak. In the latter case this usually will mean that a blocking condenser (500 $\mu\mu$fd. or larger) should be connected between the "hot" end of the grid tank and the grid of the ex-crystal tube, with the grid leak (and choke) connected on the grid side of the condenser. Such a blocking condenser can be incorporated in the plug-in tank. The grid tank tuning condenser can be a small air padder mounted in the coil form.

Those who already have a suitable power supply and speech amplifier can omit the lower part of Fig. 1520 and build simply the oscillator, buffer and modulator. Transformer input to the modulator can be used in case the

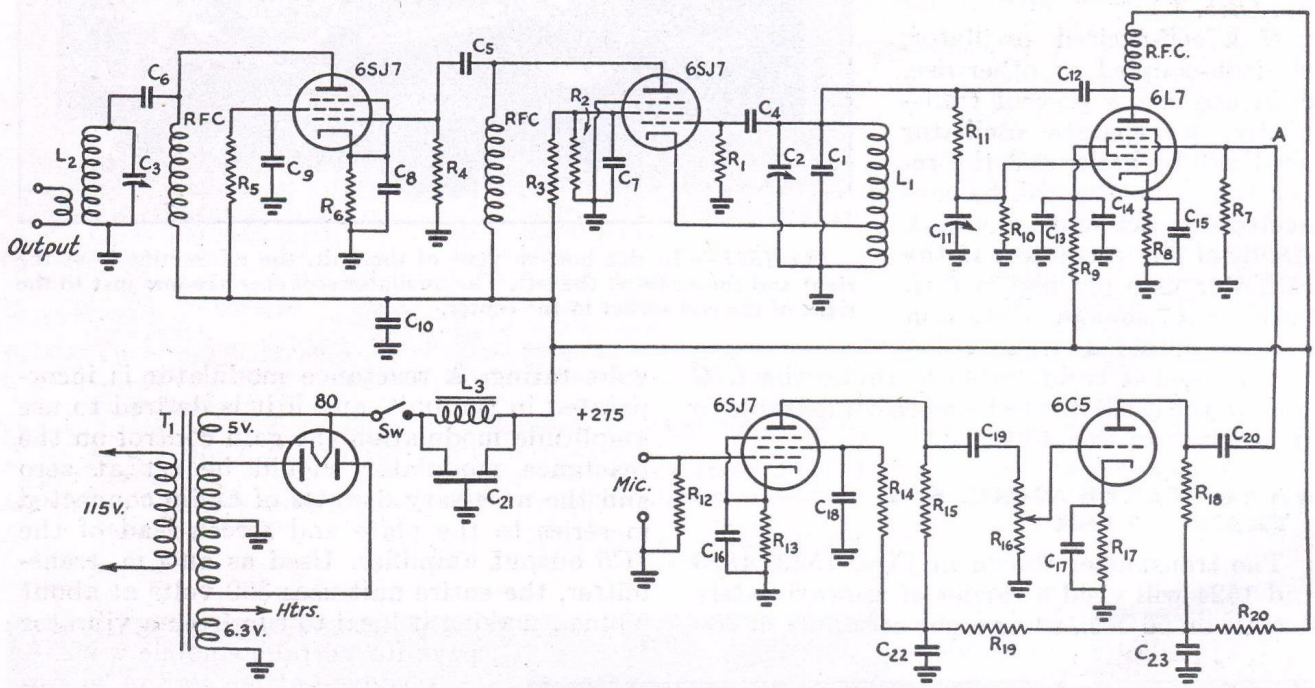

Fig. 1520 — Circuit diagram of the f.m. control unit for use with normally crystal-controlled transmitters.

C_1 — 150-$\mu\mu$fd. silvered mica for 7 Mc., 650 $\mu\mu$fd. for 3.5 Mc.; 1150 $\mu\mu$fd. for 1.74 Mc.
C_2 — 100-$\mu\mu$fd. variable (National SE-100).
C_3 — 50-$\mu\mu$fd. variable (Hammarlund HF-50).
C_4 — 100-$\mu\mu$fd. mica.
C_5 — 250-$\mu\mu$fd. mica.
C_6 — 0–001-μfd. mica.
C_7, C_8, C_9, C_{10} — 0.01-μfd. paper.
C_{11} — 3–30-$\mu\mu$fd. compression trimmer (set full open).
C_{12} — 250-$\mu\mu$fd. mica.
C_{13} — 0.01-μfd. paper.
C_{14} — 8-μfd. electrolytic, 450-volt.
C_{15} — 0.01-μfd. paper.
C_{16}, C_{17} — 10-μfd. 25-volt electrolytic.
C_{18} — 0.1-μfd. paper.
C_{19}, C_{20} — 0.01-μfd. paper.
C_{21} — Dual 8-μfd. electrolytic, 450-volt.
C_{22}, C_{23} — 8-μfd. electrolytic, 450-volt.
R_1 — 0.1 megohm, 1 watt.
R_2 — 25,000 ohms, 1 watt.
R_3, R_4, R_5 — 50,000 ohms, 1 watt.
R_6 — 300 ohms, ½ watt.
R_7 — 0.5 megohm, ½ watt.
R_8 — 300 ohms, ½ watt.
R_9 — 30,000 ohms, 1 watt.
R_{10} — 0.5 megohm, ½ watt.
R_{11} — 50,000 ohms, 1 watt.
R_{12} — 5 megohms, ½ watt.
R_{13} — 900 ohms, ½ watt.
R_{14} — 1 megohm, ½ watt.
R_{15} — 0.25 megohm, ½ watt.
R_{16} — 0.5-megohm volume control.
R_{17} — 2000 ohms, ½ watt.
R_{18} — 50,000 ohms, ½ watt.
R_{19} — 0.25 megohm, ½ watt.
R_{20} — 0.15 megohm, 1 watt.
RFC — 2.5-mh. r.f. choke.
L_1 — 7 Mc.: 10 turns No. 18 enamelled, length ¾ inch, diameter 1 inch, tapped 3rd turn from ground.
3.5 Mc.: 11 turns No. 24 enam., length ¾ inch, diameter 1 inch, tapped 4th turn from ground.
1.75 Mc.: 21 turns No. 24 enam., length 1 inch, diameter 1 inch, tapped 6th turn from ground.
L_2 — 14 Mc.: 10 turns No. 18.
7 Mc.: 20 turns No. 18.
3.5 Mc.: 40 turns No. 24.
1.75 Mc.: 75 turns No. 26.
All coils wound with enamelled wire on 1½-inch diameter forms (Hammarlund SWF-4). 1.75-Mc. coil close-wound; others spaced to a length of 1½ inches.
Link 3 to 5 turns, not critical.
L_3 — 10 henrys, 40 ma.
T_1 — 250 volts at 40 ma.; 6.3 volts at 2 amp.; 5 volts at 2 amp. (Thordarson T13R11).
Sw — S.p.s.t. toggle switch.

Note: Data for L_1 subject to individual trimming for proper frequency coverage. Adjust inductance by changing turn spacing to bring low frequency end of band near maximum capacity on C_2. Coil specifications given apply to coil centered in round shield 2 inches in diameter and 2½ inches high. The 3.5- and 7-Mc. coils will give full coverage of the 56–60-Mc. band with C_2 100 $\mu\mu$fd.; the 1.75-Mc. coil will cover approximately 57–60 Mc. with the same variable condenser.

available speech amplifier happens to have a low-impedance output circuit. The transformer and gain control connect between ground and point "A" of Fig. 1520, R_7 being omitted. Any of the conventional methods may be used, in fact, to couple the modulator to an available speech amplifier, with one precaution — if a high-impedance connection is used the "hot" lead should be shielded to prevent hum pickup. (*Bib.* 4.)

If a self-excited oscillator, electron-coupled or otherwise, is in use in the present transmitter, a separate oscillator need not be built, and the reactance modulator can be connected directly across the tank circuit of the oscillator. If the oscillator uses too high a C/L ratio, not enough deviation may be obtained without distortion, and it is advisable to revise the L/C ratio in the oscillator to be more comparable to those given in Fig. 1520.

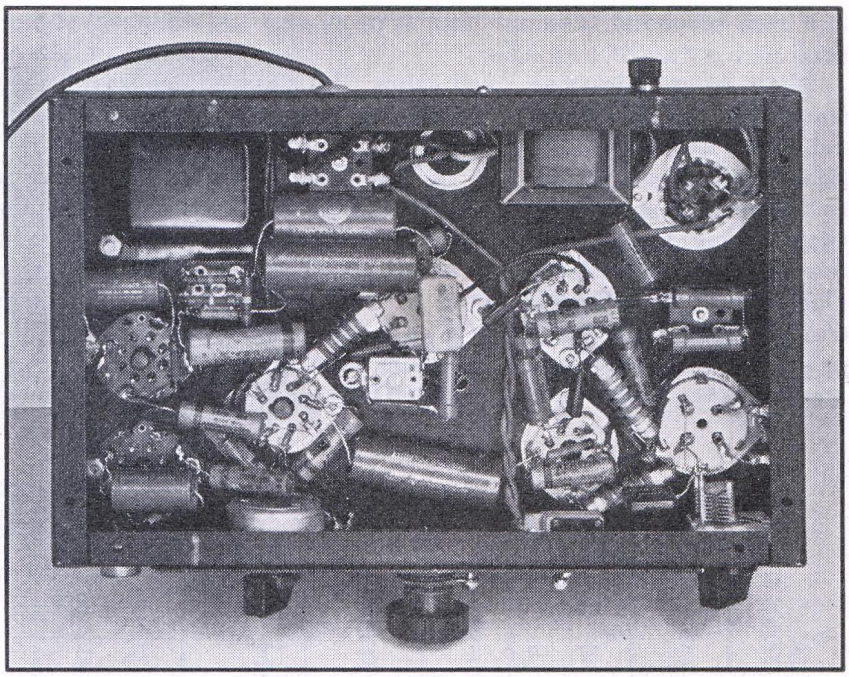

Fig. 1521 — In this bottom view of the unit, the r.f. section is at the right and the audio at the left. The oscillator socket is the one just to the right of the coil socket in the center.

• A COMPLETE 56-MC. F.M. TRANSMITTER

The transmitter shown in Figs. 1522, 1523 and 1524 will yield a carrier of approximately 7 watts on 56 Mc., using a power supply of 300 volts rating. A reactance modulator is incorporated in the unit, and if it is desired to use amplitude modulation the gain control on the reactance modulator should be set at zero and the necessary 6 watts of audio connected in series to the plate and screen lead of the 7C5 output amplifier. Used as an f.m. transmitter, the entire unit uses 300 volts at about 90 ma., making it ideal to run from a vibrator pack for portable/mobile work.

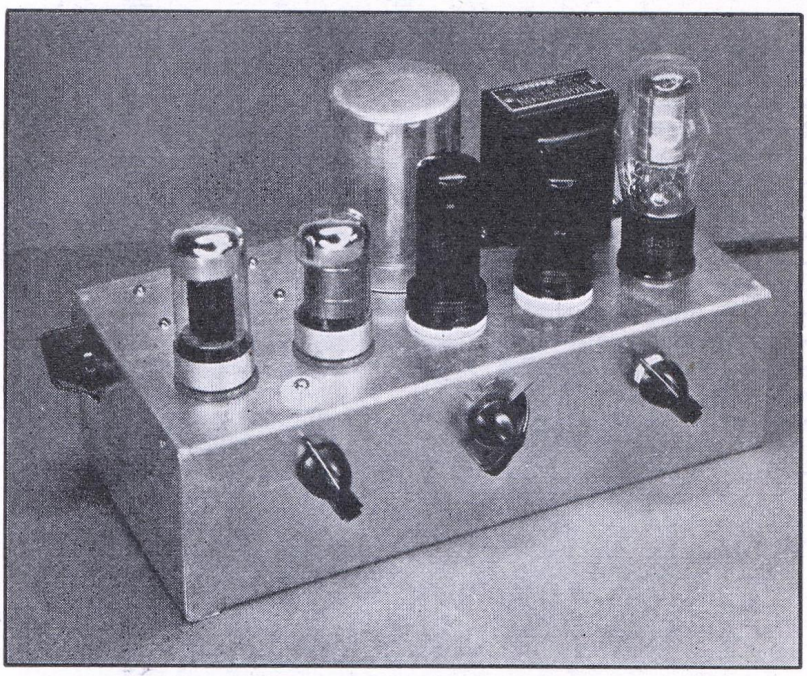

Fig. 1522 — The complete 56-Mc. f.m. transmitter has all of the r.f. components under the chassis with the exception of the oscillator grid coil, which is housed in the shield can in the rear center of the chassis. The tubes, from left to right, are 7C5 output amplifier, 7G7 doubler, 6F6 e.c.o., 6SA7 reactance modulator, and VR-150 voltage regulator.

A single-button carbon microphone is transformer-coupled to the 6SA7 reactance modulator which is connected across the tank circuit of the 6F6 e.c.o. A VR-150 stabilizes the voltage across the oscillator and modulator and aids materially in keeping the mean frequency constant. The grid circuit of the e.c.o. tunes from 14 to 15 Mc. with a slight margin at either end of the tuning range, and the plate circuit of the e.c.o. is tuned to 28 Mc. by using a self-resonant coil which is adjusted for maximum output by squeezing the turns together or pulling them apart. Once adjusted, it need not be touched for any tuning conditions. The 28-Mc. output of the e.c.o. drives a 7G7/1232 doubler to 56 Mc., which in turn drives the output amplifier. With a 300-volt supply, the final grid current should run about 0.6 ma. under load for linear amplitude modulation.

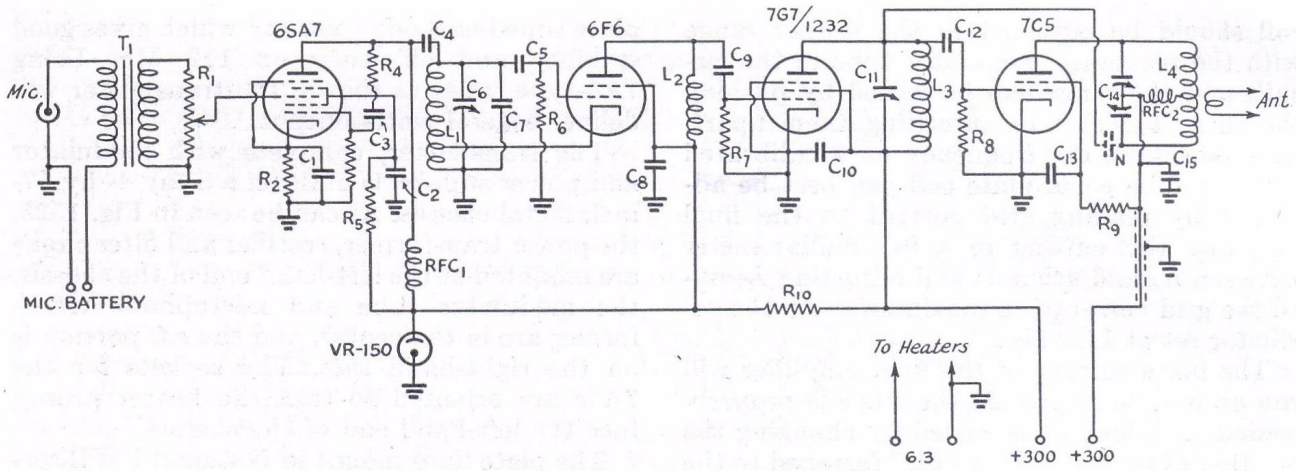

Fig. 1523 — Wiring diagram of the 56-Mc. f.m. transmitter.

C_1 — 0.01-μfd., 400-volt paper.
C_2 — 8-μfd. 450-volt electrolytic and 0.005-μfd. mica in parallel.
C_3 — 0.001-μfd. mica.
C_4 — 500-μμfd. mica.
C_5, C_9, C_{12} — 100-μμfd. mica.
C_6 — 15-μμfd. midget variable (Hammarlund HF-15).
C_7 — 25-μμfd. silvered mica (Sprague).
C_8, C_{10}, C_{13} — 0.005-μfd. mica.
C_{11} — 35-μμfd. midget variable (Hammarlund HF-35).
C_{14} — 35-μμfd. per section midget split stator (Cardwell ER-35-AD).
C_{15} — Two 500-μμfd. mica, one at each end of rotor.
N — Neutralizing condenser, see text.
R_1 — 100,000-ohm volume control.
R_2 — 750 ohms.
R_3 — 0.25 megohm (not marked in diagram).
R_4 — 50,000 ohms.
R_5 — 5000 ohms.
R_6 — 25,000 ohms.
R_7 — 0.1 megohm.
R_8 — 75,000 ohms.
R_9 — 5000 ohms, 1-watt.
R_{10} — 3000 ohms, 10 watt wire-wound.
All resistors ½-watt unless otherwise mentioned.
RFC_1 — 2.5-mh. r.f. choke.
RFC_2 — U.h.f. r.f. choke (Ohmite Z-1).
T_1 — Microphone transformer (Thordarson T58A37).
L_1 — 10½ turns No. 20 enam. spaced to occupy 1 inch on 1-inch diam. form, cathode tap 2½ turns up. Plugged into socket on chassis.
L_2 — 14 turns No. 20 enam. spaced to occupy 1⅛ inches, with diam. of 9/16 inch, self-supporting (see text).
L_3 — 4 turns No. 20 enam., ½-inch diam. and ¼-inch long.
L_4 — 6 turns No. 14 enam., ¾-inch inside diam., wound to occupy 1-inch length, with ⅜-inch gap in center to take the swinging link of 2 turns No. 14 enam., same diam.

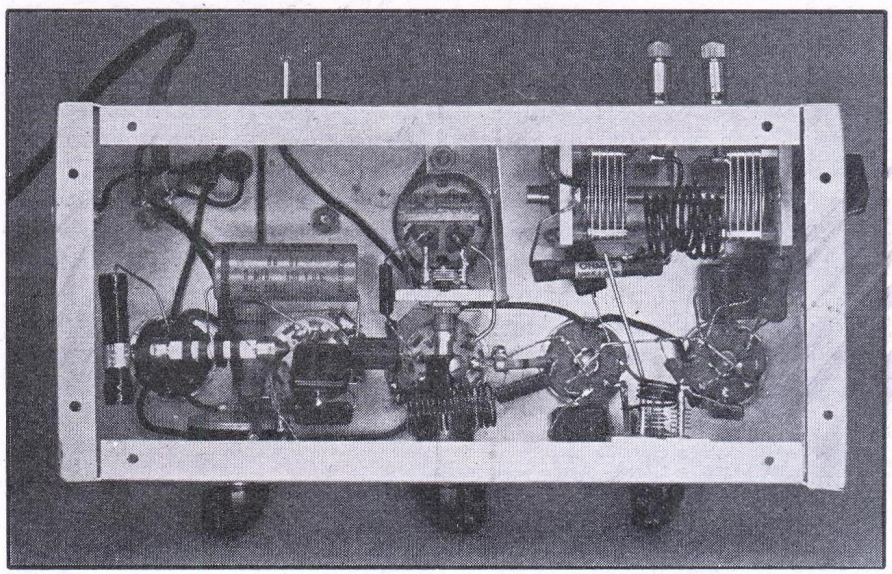

Fig. 1524 — A view underneath the chassis of the 56-Mc. f.m. transmitter shows the volume control at the left, the oscillator control at the center, the doubler tuning control at the right, and the final amplifier tuning control at the side. The microphone is connected to a connector on the left side of the chassis, and the four-prong plug and flexible wire connect to power supply and microphone battery respectively. Note the shield between the final tuning condenser and the oscillator tuning condenser, to reduce reaction between the two circuits, and the wire running from the doubler tuning condenser to near the final tank condenser which is used as a neutralizing condenser (N in Fig. 1523).

The output connects to the two binding posts mounted on a Victron strip.

If f.m. is used exclusively, the grid current can run lower with no harmful effect other than a slight decrease in output of the amplifier. The 7C5 final amplifier is plate neutralized by running a stiff wire from the plate side of the doubler tuning condenser over near the open side of the final amplifier split-stator tuning condenser. The capacity from this wire to the stator of the condenser is sufficient to neutralize the final amplifier, and it is adjusted by snipping off the wire a small bit at a time until the plate-tank tuning shows no reaction on the grid current (with plate and screen voltage off).

No difficulty should be encountered in adjusting the transmitter other than spotting the e.c.o. coils to the proper frequencies. The grid

coil should be adjusted to the proper range with the reactance modulator tube in the circuit, and the range can be varied by pushing the turns together or spreading them apart, while checking the frequency on a calibrated receiver. The e.c.o. plate coil can best be adjusted by reading grid current to the final amplifier (by cutting in a 0-1 milliammeter between R_3 and ground) and adjusting L_2 until the grid current is a maximum with the oscillator set at 14.5 Mc.

The plate current of the final amplifier will run around 45 ma. when the stage is properly loaded. The loading is varied by changing the position of the "swinging link" fastened to the output binding posts.

When using f.m., the amount of deviation is controlled by the setting of the gain control, R_1. With the gain control wide open, the deviation is over 30 kc. on 58.5 Mc., which is more than adequate for all purposes. When the receiving station does not have a regular f.m. receiver, the signal can be received on a conventional receiver by reducing the deviation at the transmitting end and tuning the signal off to one side of resonance at the receiving end.

The power lead from the power supply plug to the final amplifier was shielded because it showed some traces of r.f. All r.f. should be kept out of the power supply in a rig like this where the oscillator is self-excited, because it is likely to roughen the note. When properly adjusted, the signal should be a very good T9. If it is still rough with the reactance modulator tube out of its socket, the trouble is in the e.c.o.; if it is rough with the modulator tube in its socket and the volume control set at zero, the trouble is in the modulator.

• A COMPLETE LOW-POWERED 112-MC. TRANSMITTER

The transmitter shown in Figs. 1525, 1526 and 1527 is a complete low-powered unit using linear tank circuits instead of coils and condensers. The circuit (Fig. 1526) is of the "tuned-plate tuned-cathode" variety which gives good stability and efficiency on 112 Mc. Using 7A4-type tubes as shown, the transmitter will deliver several watts output.

The transmitter, complete with modulator and power supply, is built on a 3- by 4- by 17-inch metal chassis. As can be seen in Fig. 1525, the power transformer, rectifier and filter choke are mounted at the left-hand end of the chassis, the modulator tube and microphone transformer are in the center, and the r.f. portion is on the right-hand side. The sockets for the 7A4s are oriented so that the heater prongs face the left-hand end of the chassis.

The plate lines mount in National FWB terminal strips which have been equipped with banana-plug jacks. The strips are placed 2¾ inches apart, on either side of the 7A4 sockets. The plate lines are held together firmly by a copper strip at the shorted end and by improvised spacers at the center and plate end. These spacers are made by cutting a FWB strip in half and enlarging the holes so they can accept the copper tubing. The ends of the lines must be flared out a bit to equal the spacing between the holes for the banana-plug jacks. Banana plugs are soldered to the ends of the copper tubing.

The cathode lines are mounted underneath the chassis and are connected directly to the cathode pins of the 7A4 sockets, the other end of the cathode lines being supported by a metal pillar. The cathode tuning condenser is n unted on the front wall of the chassis and the plate tuning condenser is mounted on the rear wall. The location and mounting of the other parts can be seen from Fig. 1527.

In tuning to the 2½-meter band, first set the plate tuning condenser, C_2, so that the spacing between plates is approximately ¼ inch. Then apply power and rotate the cathode tuning condenser, C_1, until oscillation starts, as indicated by a drop in plate current. The plate current at resonance should be about 20 ma., and it will rise to 50 ma. or more when the unit is

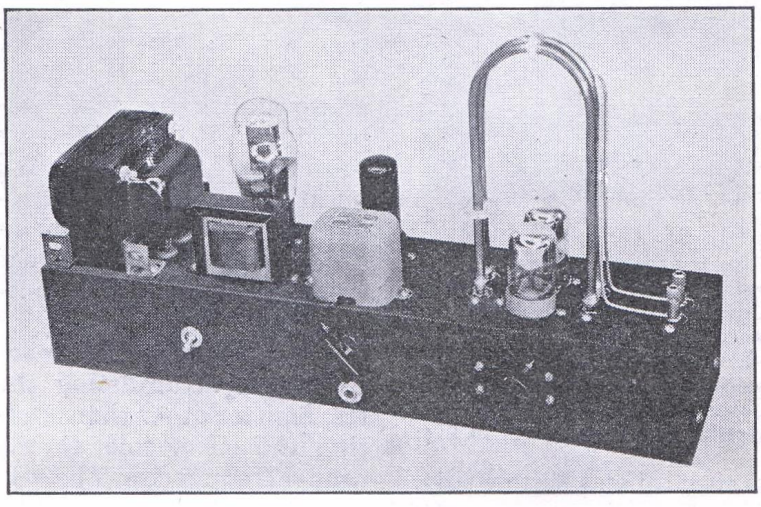

Fig. 1525 — A complete low-powered 112-Mc. transmitter. The cathode tuning is controlled by the knob at the right and the volume control is at the center, just above the microphone jack. The rubber grommet between the two knobs insulates the screwdriver used for plate tuning.

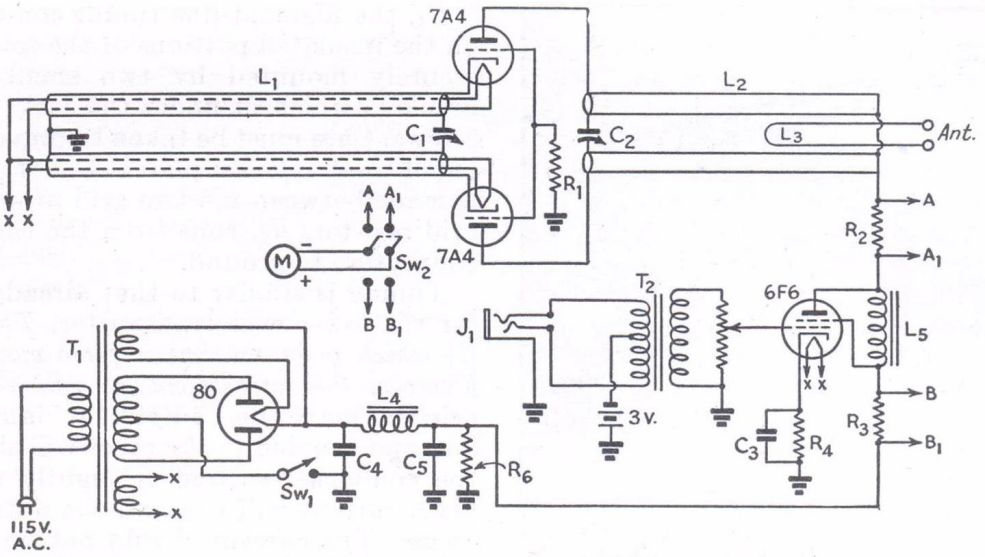

Fig. 1526 — Circuit of the complete 112-Mc. transmitter.

C_1 — 15-$\mu\mu$fd. variable (National UM-15).
C_2 — Small disk-type neutralizing condenser (Bud NC-890).
C_3 — 25-μfd. electrolytic, 25 volts.
C_4, C_5 — 8-μfd. electrolytic, 450 volts.
R_1 — 10,000 ohms, ½ watt.
R_2, R_3 — 25 ohms, ½ watt.
R_4 — 400 ohms, 1 watt.
R_5 — 50,000-ohm volume control.
R_6 — 25,000 ohms, 10 watts.
L_1 — 11½ inches ¼-inch o.d. copper tubing spaced ½ inch on centers.
L_2 — 15 inches ¼-inch o.d. copper tubing spaced ½ inch on centers.
L_3 — Loop 4 inches long of No. 14 wire, ½-inch wide.
L_4, L_5 — 10 henries, 55 ma. (Thordarson T-14C64).
J_1 — Double-button microphone jack.
Sw_1 — S.p.s.t. toggle switch.
Sw_2 — D.p.d.t. toggle switch.
T_1 — 600-volt 60-ma. transformer with 6.3- and 5-volt windings (Thordarson T-13R17).
T_2 — Double-button microphone transformer (UTC S-6).

not oscillating. Antenna coupling is adjusted by changing the position of the antenna coupling loop, L_3, with respect to the plate lines, and the oscillator should be loaded to about 35 ma. A 0–100 milliammeter can be used for measuring plate current — when it is switched across R_2 it reads oscillator current and across R_2 and R_3 it will read total oscillator and modulator current. The 6F6 should draw about 50 ma. (combined screen and plate current).

As with all self-excited transmitters, a reliable frequency-checking system should be used to insure that the transmitter is working within the amateur band. The frequency is lowered by increasing the capacity of C_2 and retuning C_1 for maximum output as described on page 324. Either a single- or double-button microphone can be used.

• MEDIUM-POWER TUNED-PLATE TUNED-FILAMENT TRANSMITTER

Figs. 1528, 1529 and 1530 show the construction and circuit of a second tuned-plate tuned-filament 2½-meter transmitter. This set has much in common with the one just described, but conventional tubes of the medium-power class are employed. Fundamentally the circuit of Fig. 1529 is the same as that of the r.f. portion of Fig. 1526, with slight changes made necessary by the directly-heated type of tube used. This arrangement, even with conventional tubes, operates with an efficiency of better than 50 per cent.

A glance at Fig. 1528 will show the arrangement of the plate circuit, supported on top of the chassis. The chassis is 4½ inches wide, 15 inches long and 2½ inches deep. There is no

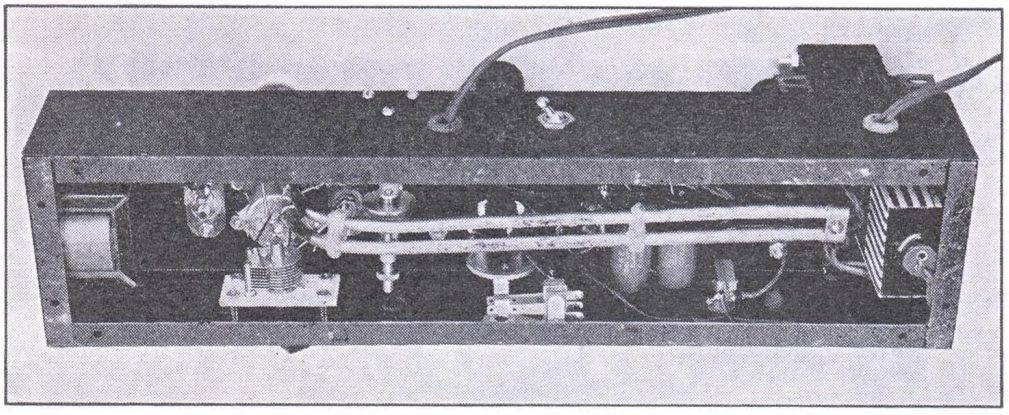

Fig. 1527 — The cathode lines run under the chassis and are supported by a metal pillar at the far end, near the microphone battery. Note the modulation choke, L_5, at the left-hand end of the chassis.

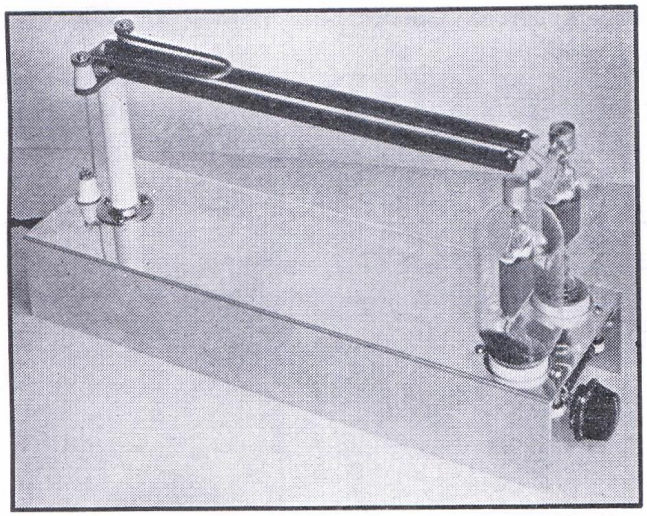

Fig. 1528 — This transmitter operates efficiently with conventional tubes at 112 Mc. To reduce losses, the plate lines are not condenser tuned. A slider is used for frequency adjustment. The hairpin coupling link is at the left.

tuning condenser for the plate line; a condenser may be used, if desired, but for best efficiency it should be omitted. The line is relatively short for the frequency, the reason being that the internal tube leads make a considerable addition to the actual length of the line, plus the loading effect of the tube plate-grid capacity.

The high-voltage connection, brought through an insulator in the chassis, is shown just to the left of the supporting insulator in Fig. 1528. The antenna-coupling link, L_3, is made from small-diameter copper tubing; its length should be adjusted to give the desired loading, with the antenna used.

Fig. 1530 is a view of the tuned filament circuit underneath the chassis. Each pipe is soldered to and partly supported by a filament prong on each tube socket. The shorted end of the line is held in place by a metal pillar which also makes the connection to the chassis ground. A wire is fed through each pipe and connected to the other filament prong on the appropriate socket. These wires are connected together at the shorted end and filament voltage applied between this common connection and ground.

C_1, the filament-line tuning condenser, rests on the insulated portions of the sockets and is securely mounted by two small aluminum brackets which fit under the socket mounting screws. Care must be taken to prevent grounding of the condenser plates. A short connection is made between the two grid prongs, and the grid resistor, R_1, runs from the center of this connection to ground.

Tuning is similar to that already described for the low-power transmitter. *The setting of C_1 which gives minimum plate current is not, however, the adjustment at which the circuit delivers maximum output.* A lamp dummy antenna coupled to the pipes will show that as the condenser setting is slightly altered the plate current will rise and the output will increase. The current should not be allowed to exceed 200 ma. at full load.

Other tubes than the T40s shown have been used successfully in this circuit, including types 809, T20, RK32, RK11, RK12, 811, and TZ40. Still others of similar construction and ratings undoubtedly also would function satisfactorily. Tubes like the HK24 and 35T will work well at 224 Mc. using this circuit.

A modulator capable of delivering 100 watts of audio is required with the transmitter running 200 watts input, and a pair of HY30Zs in Class B is recommended for the modulator. A suitable power supply which will furnish the necessary 200 ma. at 1000 volts is shown in Fig. 1225.

• A GRID-STABILIZED 815 112-MC. TRANSMITTER

The transmitter shown in Figs. 1531, 1532 and 1533 uses an 815 double beam tube in a grid-stabilized oscillator circuit and will run at an input of 60 watts with good efficiency. The circuit (Fig. 1532) is similar to the tuned-grid tuned-plate except that it uses a linear circuit instead of a coil and condenser in the grid circuit. By tapping the grids down on the line the line is loaded lightly and consequently retains its high Q. The 815 does not have a high-enough grid-plate capacity to give all of the necessary feedback, and some additional

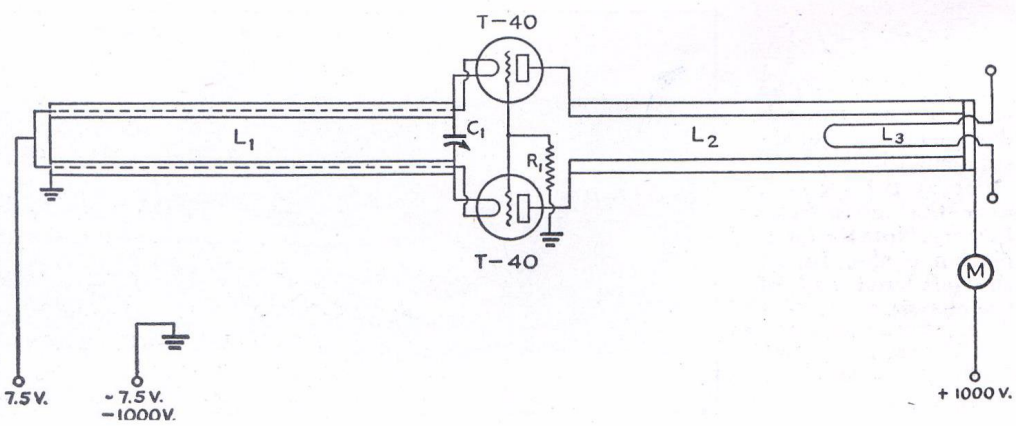

Fig. 1529 — Circuit diagram of the medium-power 112-Mc. oscillator.
C_1 — 15-$\mu\mu$fd. variable.
R_1 — 5000 ohms, 10-watt.
L_1, L_2 — Filament and plate lines; 1/16-inch o.d. copper tubing, length 12 inches, spaced diameter of tubing.
L_3 — Hairpin link for antenna coupling; length approximately 3 inches.

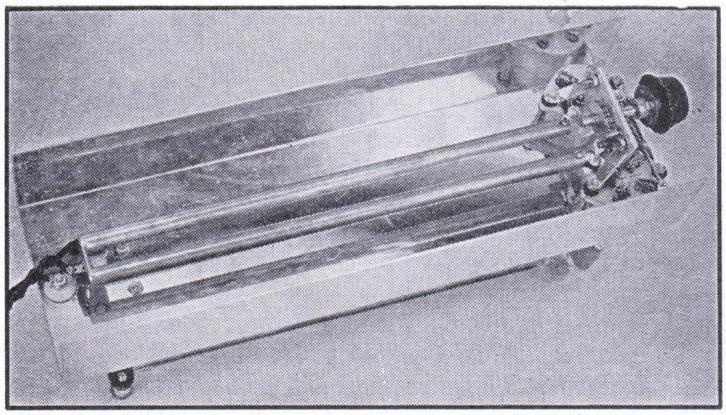

Fig. 1530 — Below-chassis view of the medium-power oscillator. The arrangement is described in the text.

capacity must be added from plate to grid of both sections of the tube. This is easily done by two short lengths of wire running from the plate terminals to near the grid lines.

The transmitter is mounted on a 3- by 4- by 5-inch box, and the box houses the filament transformer and the various condensers, resistors and the r.f. choke. The grid line is made of half-inch copper tubing and is supported a half inch from the box by three feed-through insulators which also serve as convenient connectors to the grids and to the grid leak. The open ends of the parallel tubings take 3-inch lengths of ⅜-inch diameter tubing which can be moved in and out to adjust the frequency of the oscillator. They are held securely in place by set screws through the half-inch tubing.

The plate condenser is supported by a 3-inch steatite pillar which also acts as a guide for the sliding variable antenna coupling. Two large 866-type plate caps are slid over the pillar and the antenna binding-post assembly (National FWB) is fastened to them by short lengths of No. 12 wire. By sliding this assembly up and down the antenna coupling can be set to any value desired.

There is nothing unusual about the tuning of the transmitter outside of the adjustment of the feedback condensers. This can best be done with a dummy load such as a 25-watt electric lamp connected to the antenna terminals. The lead from the grid leak, R_1, to ground should be opened and a 0-10 milliammeter connected in the circuit. Plate voltage can be applied and the plate tuning condenser rotated for maximum output as indicated by the brilliancy of the lamp. The grid current should be between 3.5 and 5 ma. at this point — if it is higher there is too much feedback and the feedback capacity should be reduced by trimming off a short length of the wire or by moving it away

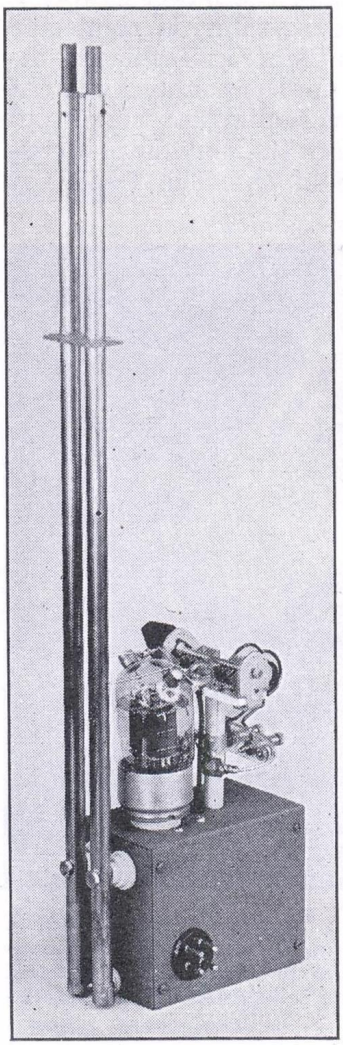

Fig. 1531 — The grid-stabilized 812 112-Mc. transmitter is mounted on a 3- by 4- by 5-inch box. The frequency is changed by adjusting the length of the grid lines by sliding the inner tubes in and out. The power supply cable plugs on the plug mounted on the side of the box.

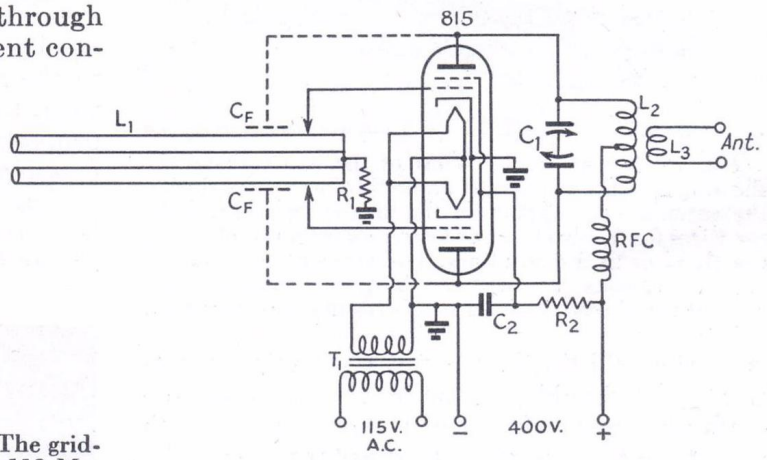

Fig. 1532 — Wiring diagram of the grid-stabilized 2½-meter oscillator.
C_1 — 15-μμfd. dual condenser (Hammarlund HF-15X).
C_2 — 0.002-μfd. mica.
C_F — Feedback condenser. See text.
R_1 — 15,000 ohms, 1 watt.
R_2 — 25,000 ohms, 10 watts.
L_1 — ½-inch diam. copper tubing 23 inches long. Spaced 1 inch on centers; grids tapped 2¾ inches from shorted end.
L_2 — 2 turns No. 12 enam., 1-inch diam., turns spaced ¾ inch.
L_3 — 2 turns No. 12 enam., ¾-inch diam., turns spaced ¼ inch.
RFC — U.h.f. choke (Ohmite Z-1).
T_1 — 6.3-volt filament transformer (Thordarson T19F81).

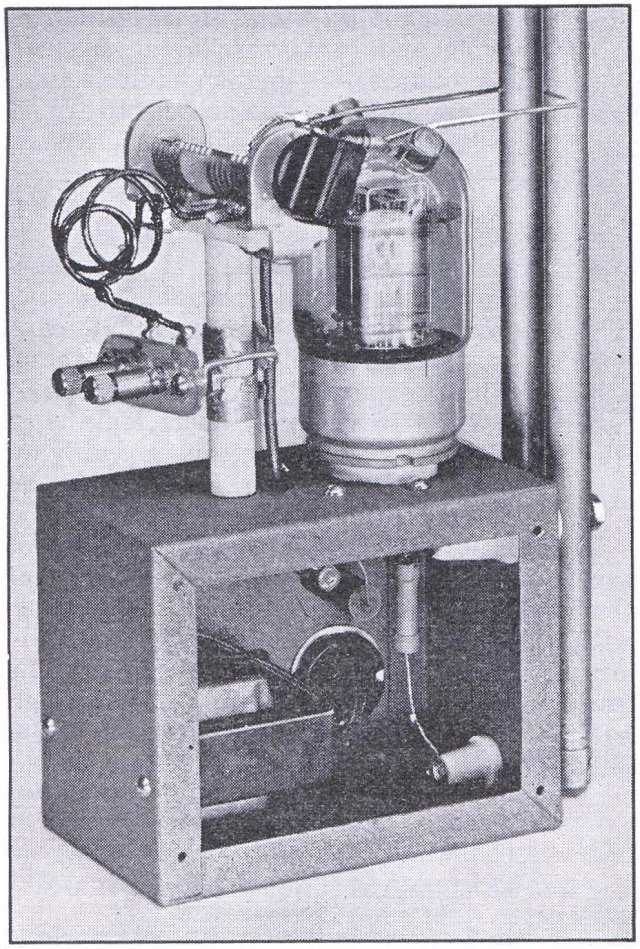

Fig. 1533 — A close-up view of the 815 transmitter showing how the antenna coupling is changed by sliding the antenna coil support on the insulating pillar. Note the wires for feedback control running from the plates of the 815 close to the grid lines. The filament transformer and the various resistors and by-pass condensers are mounted in the box, shown here with one side removed.

from the grid lines. It is not too critical a setting but it should be done before the transmitter is put on the air. After the proper feedback adjustment is found, the antenna can be coupled to the transmitter and modulation applied. The frequency can be checked by means of Lecher wires or a wavemeter. The antenna coupling is tightened until the plate current is 150 ma. and the grid current should be between 3.5 and 5 ma. under these conditions.

The power supply is required to deliver slightly over 165 ma. at 400 volts, and the modulator must give at least 30 watts to modulate fully the oscillator. A pair of 6L6s in Class AB_1 will be satisfactory for the modulator, and the 400-volt supply can be the same as suggested for Fig. 1512.

• A TRANSMITTER FOR 224 MC.

As one operates on frequencies higher than 116 Mc. he finds considerable difficulty in getting good performance with tubes other than those designed expressly for u.h.f. operation. However, there are several inexpensive tubes available to amateurs that will perform well on 224 Mc., and the transmitter shown in Figs. 1534, 1535 and 1536 shows how the HY75 can be put to work.

The transmitter is built on a 3½- by 6½-inch strip of ¼-inch Presdwood supported by two strips of 1- by 2-inch wood. A rectangular hole is cut in the center of the Presdwood to accommodate the tuning condenser which is supported by two metal pillars at one end. The tuned circuit consists of two pieces of ¼-inch copper tubing 3½ inches long which are supported at one end by two feed-through insulators. The screws of the feed-through insulators are sweated into the ends of the tubing, and the tuning condenser connects to two lugs right at this point. Connection from the tubing to the grid and plate leads of the tube is made through ½ inch of flexible braid. Filament chokes, the plate r.f. choke and the grid leak are mounted under the chassis.

The antenna coupling consists of a loop of wire parallel to the copper tubing and terminating in the antenna binding posts. The coupling is varied by moving the loop nearer to or farther away from the copper tubing.

The transmitter should first be tested with a dummy load, and a 10-watt electric lamp is excellent for the purpose. The load is connected to the antenna posts and the power supply is then turned on. If everything is connected properly the lamp will light, its brilliancy depending upon the tightness of coupling and the setting of C_1. It will be found that the output is a little better towards the maximum-capacity end of the range of C_1. The frequency

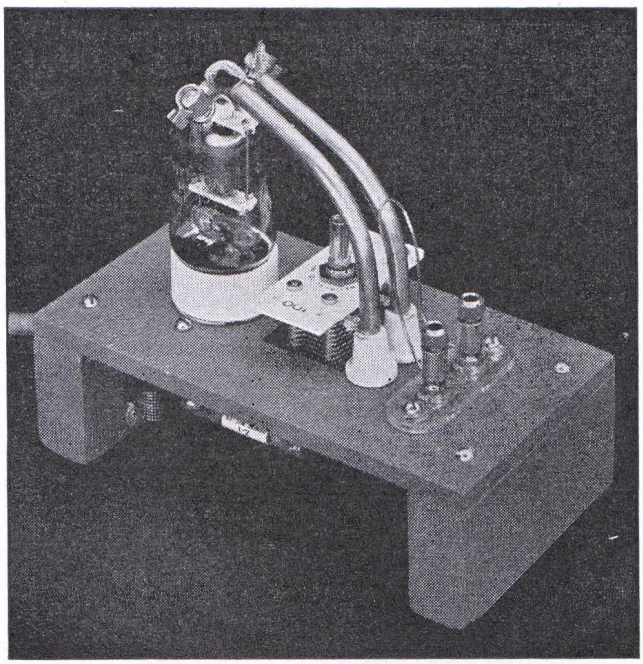

Fig. 1534 — A 224-Mc. transmitter using the HY75. A rectangular hole in the top of the Presdwood chassis allows the tuning condenser to be placed for shortest leads. The tuning condenser is adjusted by an insulated screwdriver.

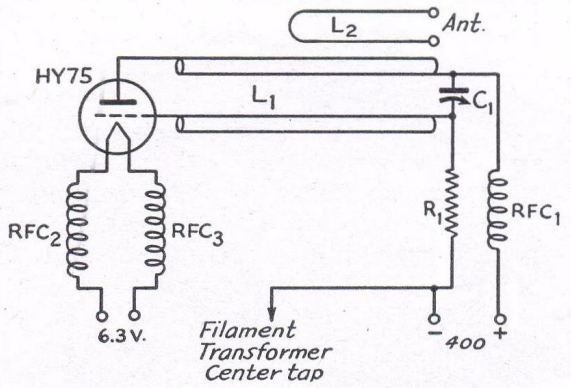

Fig. 1535 — Wiring diagram of the 224-Mc. oscillator.
C_1 — 100-$\mu\mu$fd. midget variable (National UM-100).
R_1 — 5000 ohms, 10 watts wirewound.
L_1 — ¼-inch copper tubing 3½ inches long, spaced ½ inch on centers.
L_2 — 2-inch loop No. 16 bare wire.
RFC_1 — U.h.f. choke (Ohmite Z-1 or Z-0).
RFC_2, RFC_3 — 10 turns No. 18 enam. closewound on ½-inch diam., self-supporting.

coverage of the transmitter should now be checked, by Lecher wires or a wavemeter, to make sure that it will cover the range. The coverage can be adjusted slightly by changing the separation of the copper tubes, but if this is not enough the tubes will have to be made shorter or longer. The tuning condenser is adjusted by an insulated screwdriver.

The transmitter requires a power supply capable of furnishing 60 ma. at 400 volts, and the modulator should be capable of delivering 12 watts of audio. The 6A6 modulator mentioned for use with Fig. 1503 will be quite adequate.

Because of its small size, a transmitter of this type can be built right into a rotatable antenna for the 224-Mc. band if desired. It is desirable not to run a feed line for any great distance at this frequency because of the chances for loss in the line.

• A 112-MC. BATTERY TRANSCEIVER

The transceiver shown in Figs. 1537, 1538, 1539 and 1540 is designed for short-haul portable operation in the 112-Mc. band. Its range can be extended considerably by using it with a better antenna in a suitable location, but with the attached antenna a range of several miles can be expected from mediocre locations and many times this distance from high points. The use of 1.4-volt battery tubes and a Class-B audio stage provides economical battery operation. Replacement batteries can be obtained for less than $3.00, and the complete cost of the transceiver is approximately $21.00. Variable antenna coupling, good band spread and a loud speaker all add to operating convenience.

The transceiver uses an HY-114-B oscillator-detector, a 1G4G driver and a 1G6G Class-B audio output stage. The use of Class-B output results in economical use of the battery power because full plate current is only drawn during modulation peaks or strong signal peaks. The HY-114-B is used in the usual transceiver circuit — a larger value of grid leak is switched in during reception and causes the detector to superregenerate. Other contacts on the send-receive switch open the microphone circuit,

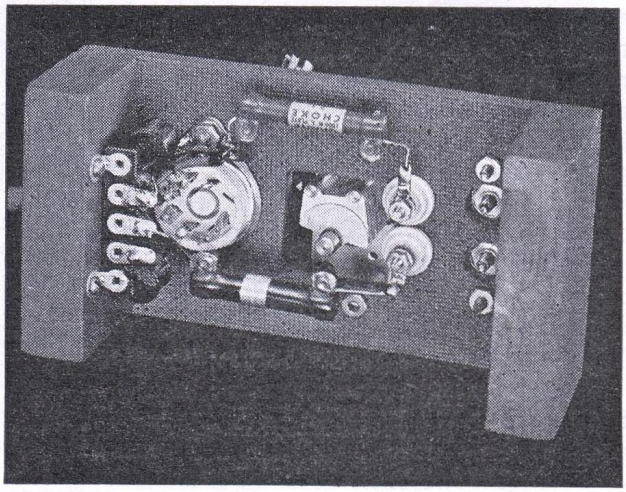

Fig. 1536 — The r.f. chokes and the grid leak are mounted under the chassis of the 224-Mc. transmitter. The power supply cable is brought in through a hole in the side to the tie strip on the left-hand side.

change over the plate voltage to the detector and switch the audio output from modulation transformer to speaker or headphones. A toggle switch on the panel allows headphones to be switched in when that type of operation is desired.

A 10- by 12- by 3-inch chassis is used as the cabinet for the transceiver, the bottom plate of the chassis serving as a panel on which is mounted all of the radio equipment. A carrying handle and eyes for the carrying-belt snap hooks are bolted to the chassis. The arrangement of the parts and controls can be seen in Figs. 1538 and 1540. A shelf is made by cutting down a deck chassis that originally measured 8¾ by 6½ inches to a depth of 2¾ inches. The tuning dial is mounted so that its shaft is 2½ inches down from the top and 2¼ inches in from the right-hand edge, and then the tuning condenser can be mounted to line up with the dial — it is spaced from the panel by 1¼-inch pillars. The shelf is mounted on the panel so that it is 6½ inches above the bottom of the panel. When the shelf has been located, it can be removed and the tube sockets and other parts mounted on it. The HY-114-B socket is 1⅝ inches in from the left-hand edge (looking at it from the rear) and the 1G4G socket is placed 1¾ inches farther to the right. The 1G6G socket is located 3 inches from the right-hand edge, and all sockets are placed as close to the edge of the shelf as possible, with the filament prongs facing the edge.

Transformer T_1 is mounted between the HY-114-B and the panel, T_2 fits between the two audio tubes, T_4 mounts on the right end of the shelf under the speaker, and T_3 is mounted below the shelf in back of the regeneration control.

Before the unit is completely assembled for wiring, it is necessary to modify C_1. The mounting bracket is removed and the rotor terminal is shifted around to the right-hand side (rear view). The extra rotor and stator plates can be removed at this time, and the right-hand stator terminal is clipped off flush with the plate. This last operation allows the padding condenser, C_2, to be mounted between the rotor and stator lugs of C_1 without interference from the unused terminal.

The swinging link is made by fastening a 1-turn link of No. 12 wire to a 3½-inch length of ¼-inch diameter polystyrene rod. The ends of the link are passed through holes drilled in the rod and fastened with Duco cement. Flexible leads to the antenna posts are soldered to the link before it is cemented in place.

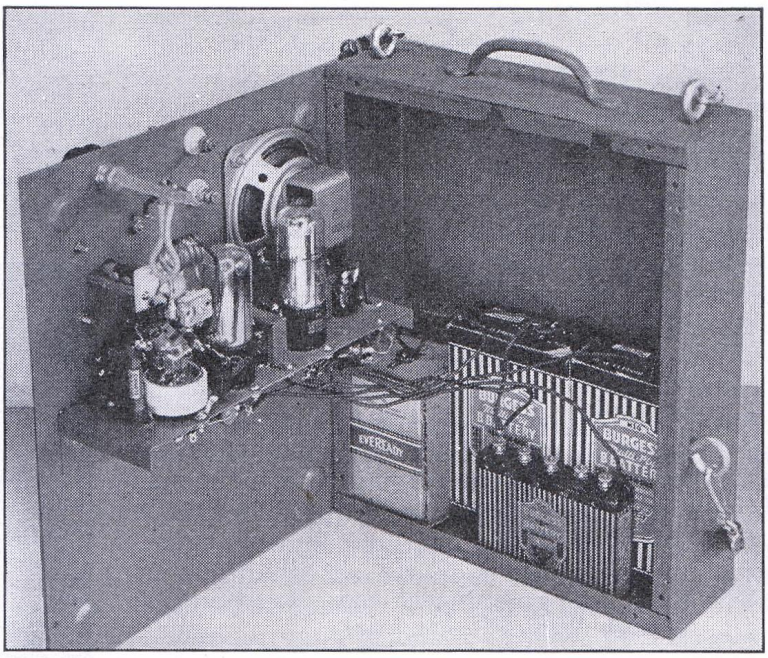

Fig. 1538 — A shot inside the chassis shows how the batteries are arranged and how all of the radio gear is mounted on the panel (actually the bottom plate of the chassis). Note the swinging link used to control antenna coupling. The band-set condenser is adjusted before the unit is fastened in place.

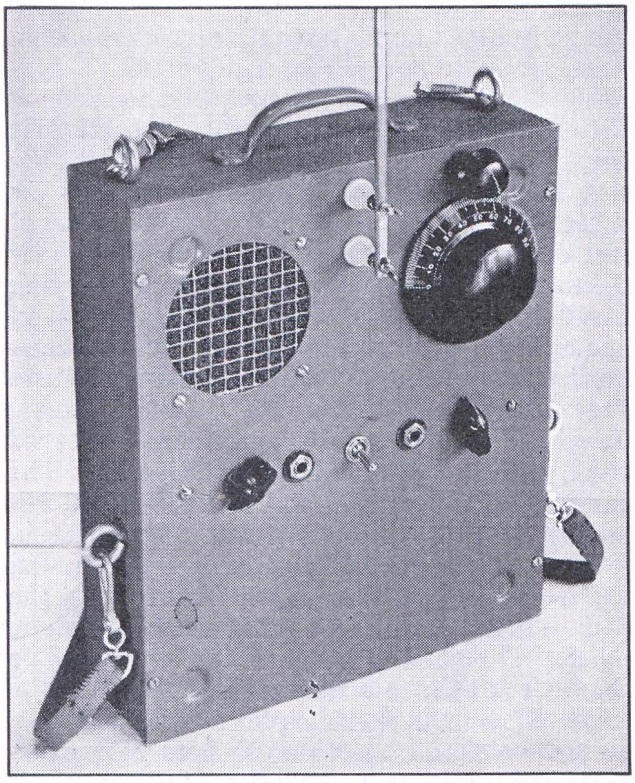

Fig. 1537 — The complete self-contained 2½-meter transceiver is built in a 10- by 12- by 3-inch chassis. In this front view the speaker grill and tuning control can be seen. The knob above the tuning dial controls the adjustable antenna coupling, and the lower knobs are regeneration (left) and send-receive switch. The toggle switch in the center permits either headphone or speaker operation — the battery "off" switch is mounted on the regeneration control.

The wiring of the detector-oscillator is the most important part of the wiring, and care should be taken in making the leads short and rigid. The coil L_1 is placed so that it will clear the plates of C_1 and not be too close to the cabinet when the panel is put in place. The other wiring requires no special attention except that it should be not likely to flop around. Spare pins on the sockets can be used conveniently as tie points for the wires coming from the batteries.

The carrying straps can be cut from web belting or from inexpensive dog leashes. Eyes and snap hooks for the straps are sold by hardware stores, and the belting or leashes can be obtained from the dime stores or from pet shops.

The A supply is one Burgess 4F or one Eveready type 742, and either two Burgess M30 or two Eveready 482 are used for the B supply. The bias battery is either a Burgess 5540 or an Eveready 773. Life charts furnished with the batteries show that the B batteries will last for approximately 60 or 70 hours of operation — the A battery will stand up a bit longer. The C battery will last for its shelf life, and it need only be checked once in a while.

To put the transceiver in operation, the battery leads are soldered in place and an antenna is attached. The antenna length is not critical, but it should be around 23 inches if a quarter-wave antenna is to be used and about 45 inches for a half-wave antenna. The headphones and microphone are plugged in the proper jacks and the swinging link set for minimum antenna coupling. S_3 should be turned

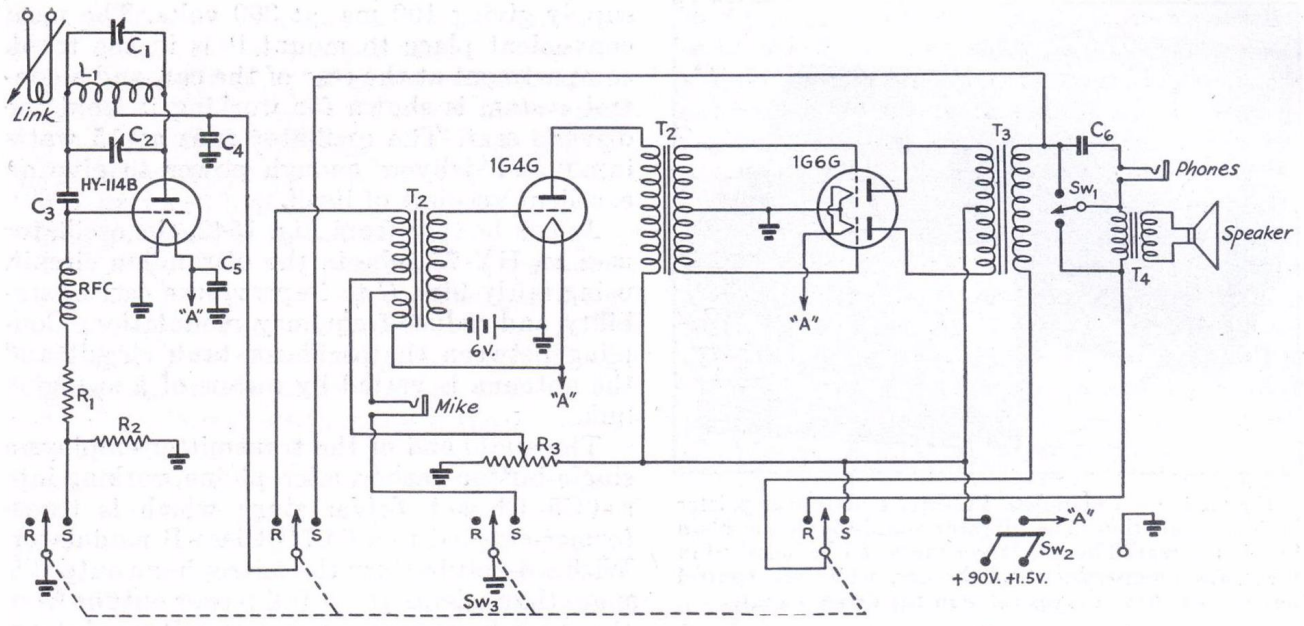

Fig. 1539 — Circuit of the battery transceiver.

C_1 — 2-plate variable (Hammarlund HF-15 with four plates removed).
C_2 — 3–30-$\mu\mu$fd. mica (National M-30).
C_3 — 100-$\mu\mu$fd. mica.
C_4 — 0.005-μfd. mica.
C_5 — 0.01-μfd. paper, 400 volts.
C_6 — 0.25-μfd. paper, 600 volts.
R_1 — 5000 ohms, ½ watt.
R_2 — 0.1 megohm, ½ watt.
R_3 — 0.1 megohm variable (Yaxley).
L_1 — 5 turns No. 12 bare wire, ½-inch diam., turns spaced diameter of wire.
Link — See text.
RFC — U.h.f. r.f. choke (Ohmite Z-1).
S_1 — S.p.d.t. toggle switch.
S_2 — D.p.s.t. snap switch mounted on R3 (Yaxley No. 7).
S_3 — 4-circuit single-gang selector switch (Yaxley 3242-J).
Speaker — 3-inch speaker (Jensen Economy-P-300).
T_1 — Transceiver transformer (Inca I-45).
T_2 — 1G4G plate to Class-B grids transformer (Inca L-48).
T_3 — Modulation transformer, 10,000 ohms to 8000 ohms secondary (Inca N-37).
T_4 — Speaker transformer, 8000 ohms to 4 ohms secondary (Inca F-64).

to the "receive" position and turning R_3 clockwise will turn on the set.

As R_3 is advanced in a clockwise direction, the superregenerative hiss should become audible. Tightening the antenna coupling will require that R_3 be advanced further but, unless something is radically wrong, it will be possible to make the detector superregenerate with the antenna coupling set near maximum. The band-set condenser, C_2, should now be adjusted so that the 2½-meter band is centered on the tuning dial, and this can best be done with Lecher wires or an absorption-type wavemeter, or by comparison with someone else's transceiver. When this has been done, the transceiver can be switched to the "send" position and the transmitter checked.

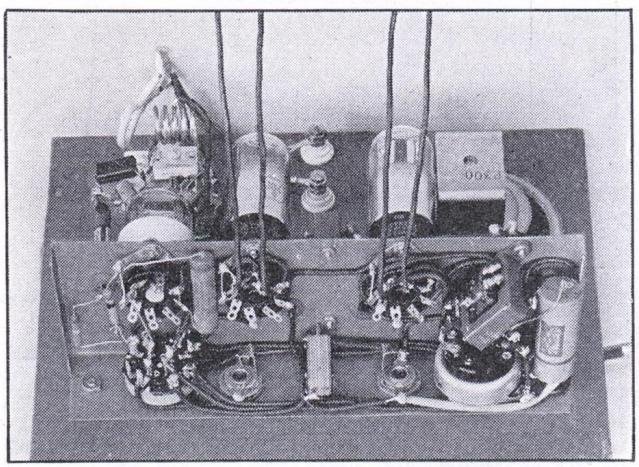

Fig. 1540 — Another view of the gear mounted on the panel, showing the placement of parts. This arrangement should be followed closely in order to clear the batteries when the entire unit is assembled. The modulation transformer can be seen just in front of the regeneration control — the other transformers are mounted above the shelf.

If the detector does not superregenerate smoothly over the entire range, it will be well to experiment with the position of the tap on L_1, the value of C_4 and the value of R_2. The hiss should be smooth, with no tendency towards an audible squeal. The antenna loading can be judged by switching to the "receive" position and increasing the coupling until the detector stops superregenerating. The link is then backed off slightly until the detector again works properly, and this setting will be satisfactory for transmitting as well.

This transceiver has been used successfully as a "walkie-talkie" over a half mile or more of flat town streets, and distances of from 12 to 15 miles have been covered from suitable locations. The headphone output is of good strength, but the speaker output is relatively low and it will be most useful with strong sig-

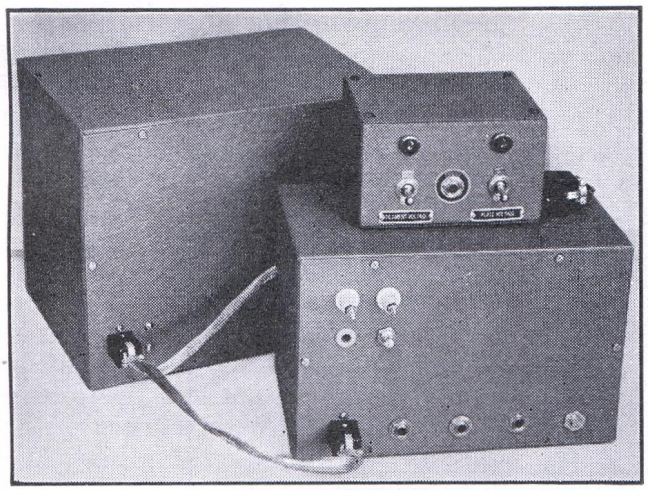

Fig. 1541 — A complete 112-Mc. mobile transmitter before installation. The vibrator supply is in the plain box at the rear. The two larger units can be installed in the trunk compartment of the car, while the control box mounts near the operator in the driver's seat.

nals and in surroundings with few disturbing noises.

• A 15-WATT 112-MC. TRANSMITTER FOR MOBILE USE

The transmitter shown in Figs. 1541, 1542, 1543 and 1544 is designed to be used in an automobile in conjunction with a vibrator power supply giving 100 ma. at 300 volts. The most convenient place to mount it is in the trunk compartment at the rear of the car, and a control system is shown for working it from the driver's seat. The oscillator runs at 15 watts input and delivers enough power to give an excellent account of itself.

As can be seen from Fig. 1542, the oscillator uses an HY-75 tube in the ultraudion circuit, using fairly high *C* to improve the carrier stability and reduce frequency modulation. Coupling between the oscillator tank circuit and the antenna is varied by means of a swinging link.

The audio end of the transmitter employs a single-button carbon microphone working into a 6C5 Class-A driver stage which is transformer-coupled to a 6Y7G Class-B modulator. With a 6-volt battery the microphone output is more than adequate for full power output from the speech system. The Class-B modulator gives higher power efficiency and lower average plate current than a Class-A modulator and, as a result, the proportion of the limited power-supply output current which must be reserved for the audio section is relatively low. The 6Y7G, an octal-based version of the 79, requires a plate-to-plate load resistance of about 14,000 ohms. The oscillator, operating with 300

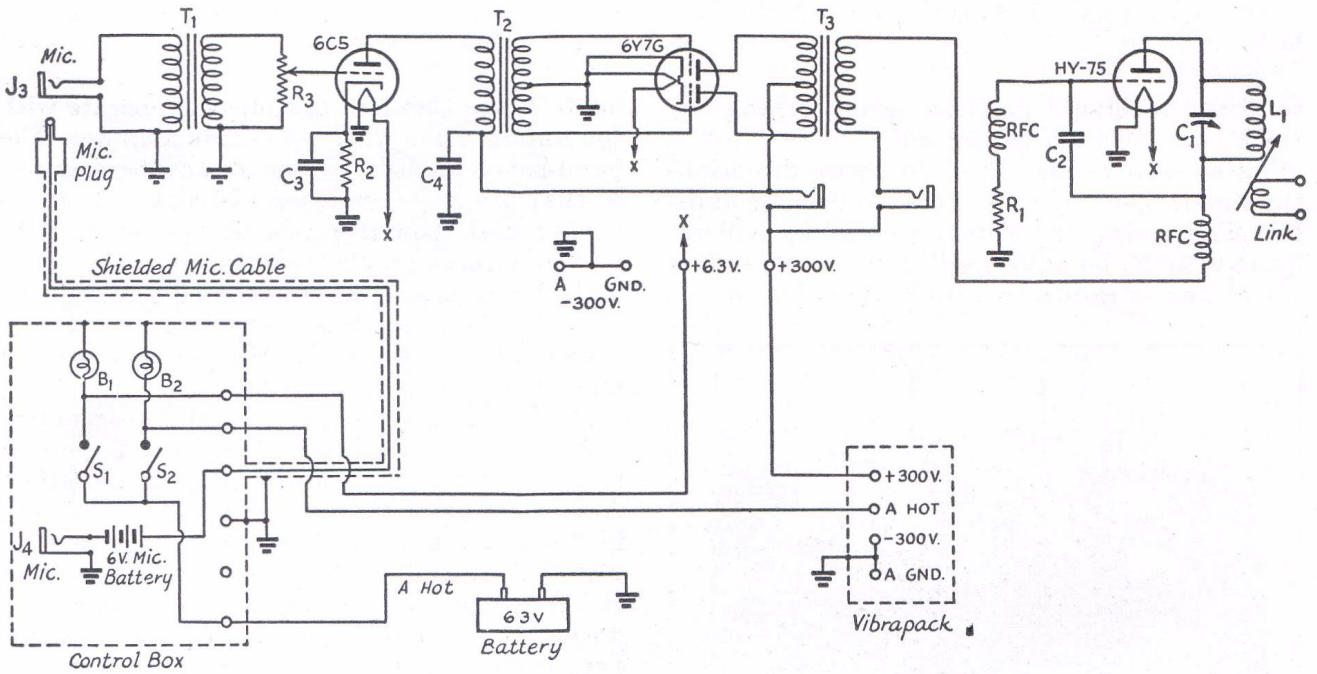

Fig. 1542 — Wiring diagram of the 2½-meter mobile transmitter.

C1 — 35-μμfd. midget variable (Hammarlund HF-35).
C2 — 100-μμfd. mica.
C3 — 10-μfd. electrolytic, 50-volt.
C4 — 8-μfd. electrolytic, 450-volt.
R1 — 5000 ohms, 1 watt.
R2 — 1000 ohms, 1 watt.
R3 — 0.1-meg. variable.
L1 — 2 turns of ⅛-inch diam. copper tube, ¾-inch diam., turns spaced ⅜ inch.
Link — 2 turns No. 12 wire, ¾-inch diam., double spaced.
J1, J2 — Midget closed-circuit jacks.
J3, J4 — Midget open-circuit jacks.
S1, S2 — Heavy-duty d.p.s.t. toggle switches.
B1, B2 — 150-ma. dial lights.
RFC — High-frequency r.f. chokes (Ohmite Z-1).
T1 — S.b. microphone to single or push-pull grids (Thordarson T-86A02).
T2 — Interstage audio, single plate to push-pull grids (Thordarson T-19D06).
T3 — Output transformer, 10,000-ohm primary to 4500-ohm secondary (Thordarson T-17M59).

volts at 50 ma., represents a load impedance of 6000 ohms, so that the primary-to-secondary impedance ratio required in the coupling transformer is 2.3 to 1. With the transformer specified a close approximation to this ratio is secured when the taps are selected to match 4500 ohms to 10,000.

The transmitter is enclosed in a 5- by 6- by 9-inch metal cabinet. Most of the parts are mounted on a chassis (ICA) measuring 4¾ by 8½ by 1½ inches. The panel and chassis are fastened together by the d.c. input plug, gain control and jacks which may be seen in Fig. 1541; the microphone jack, J_3, is the one at the right. Feed-through insulators which serve as antenna terminals can be seen at the top left-hand corner of the panel. A hole for screw-driver tuning of the oscillator is drilled below one of the antenna insulators. This hole should preferably be drilled after C_1 has been mounted to insure that it lines up with the condenser shaft. The swinging-link control shaft is to the right of the hole just mentioned.

Fig. 1543 of the transmitter shows the arrangement of the main components. The 6C5, T_2, the 6Y7G and the HY-75 may be seen from left to right along the rear edge of the chassis. T_1 is located at the front left-hand corner with T_3 to the right. C_1 is mounted on a stand-off insulator which elevates the condenser mounting bracket 1⅝ inches above the base. The nut which clamps the mounting bracket and condenser together should be loosened and the bracket rotated 180 degrees; this reduces the length of the leads associated with the tuned circuit. The condenser shaft should be slotted with a hack-saw to allow screw-driver adjustment.

The r.f. circuit components are kept as compact as possible. The plate r.f. choke is to the left of the tube, and the grid choke, C_2 and R_1 are at the right. L_1 is soldered directly to the terminals of C_1. Small-sized shield braid is used for the flexible lead between the HY-75 plate cap and the tuned circuit.

The swinging link is easily constructed. It is made from a panel bearing assembly with the shaft extension cut down to a length of 1 inch. A piece of ¼-inch polystyrene rod is fastened to the metal shaft by means of a solid shaft coupling. The ends of the link winding pass through holes drilled in the polystyrene rod; adequate rigidity will be obtained if the shaft holes are not made too large and if the wires are cemented in place. The panel bearing shaft is slotted to facilitate screw-driver adjustment.

Fig. 1544 shows the arrangement of the parts mounted beneath the chassis. C_3 and R_2 are at the upper left-hand corner. C_4 is the condenser connected between the tube socket and the microphone jack. The shaft of R_1 should be slotted before the resistor is mounted. The 4-prong plug is mounted on the panel and projects through a 1⅜-inch hole in the chassis wall.

The cabinet has rolled-over edges to which the panel is fastened. The panel and chassis assembly cannot be slipped into the case unless the edges on the bottom and sides are cut out; the entire length of the side pieces need not be removed but the bottom edge should be cut off completely.

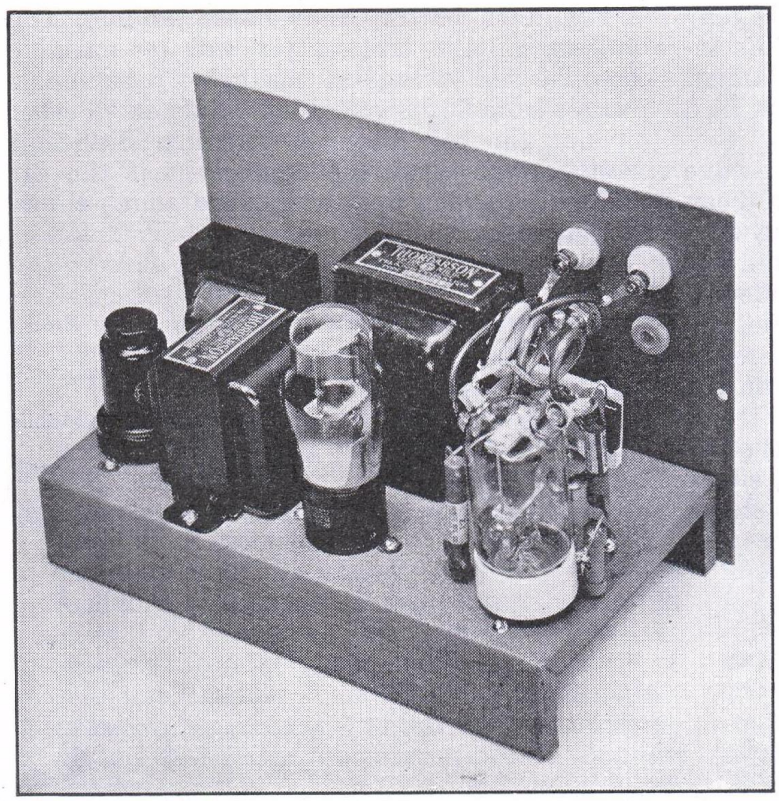

Fig. 1543 — A rear view of the mobile transmitter.

The control box components are all housed in a 3- by 4- by 5-inch metal utility box. The plug mounts at one end of the box and the rest of the parts mount on one of the long sides. The microphone battery can be placed inside the case, but this calls for filing down the turned-down edges since the opening is a little too small to pass an ordinary 6-volt dry battery such as the Burgess No. F4PI.

Heavy-duty toggle switches should be used for the storage battery circuits. Most dealers carry a type designed for 125 volts at 12 amperes. These switches are nearly all of the d.p.s.t. variety and the poles may be connected in parallel to increase the safety factor.

Plate currents can be measured by a 0–100 milliammeter fitted out with a plug for the plate jacks J_1 and J_2. The oscillator plate current should

be approximately 35 ma. with no antenna load and with 300 volts on the plate. The antenna coupling and tuning should be adjusted to obtain a full-load current of approximately 50 ma., using the loosest coupling which will give the desired plate current.

The modulator plate current should be about 25 ma. without speech and should rise to about 100 ma. on peaks. Under full modulation the plate current of the oscillator will kick downward slightly because of the voltage drop most power supplies show when the modulator current increases.

The preliminary testing might well be carried on with a dummy load coupled to the oscillator. As a matter of fact, this procedure is recommended unless the transmitter frequency has been set inside the 2½-meter band before the actual auto installation is started. In any event, check the frequency carefully before starting up for regular operation, because the antenna loading will affect the frequency. Also, because the circuit is high-C a small variation in the setting of C_1 will cause a considerable jump in frequency. It is wise to check the frequency each time an adjustment is made. Frequency checking can be done with an absorption-type wavemeter, with Lecher wires or by listening on a calibrated receiver.

A 300-volt 100-ma. vibrator type supply is recommended for mobile operation. The self-rectifying type is the least expensive and places the smallest load on the car battery. Of course, any supply that will deliver the necessary voltage and current will be quite satisfactory. An a.c. supply for testing purposes may have the same output capabilities as the vibrator supply and should include a filament transformer designed to deliver 6.3 volts at 3 or 3.5 amperes.

The antenna can be either a quarter-wave (24 inches), or a half-wave (50 inches) rod can be used. It is easiest to feed the antenna with a short length of two-wire line, tuning the line by connecting a small 15-$\mu\mu$fd. condenser across the link or in series with the line, depending on the length of the line. The antenna tuning condenser can be mounted right on the antenna terminals of the transmitter.

The control box should be mounted at some convenient point near the driver's seat, either under the dash or above it. Fig. 1542 shows how the control box is wired into the circuit, and Fig. 1430 shows how receiver control can be included in the arrangement to give a complete mobile station.

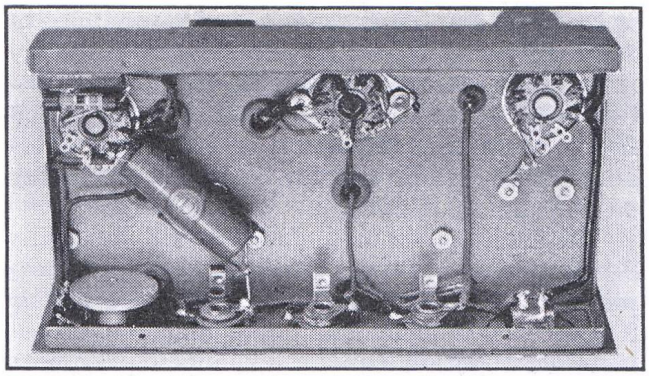

Fig. 1544 — The bottom view of the mobile transmitter.

The four leads which run from the control box to the transmitter in the trunk are encased in large-sized spaghetti tubing.

The power supply is housed in a metal cabinet both for good appearance and protection. Both of the cabinets (transmitter and supply) should be bolted to the trunk floor before the rest of the equipment is installed. The transmitter and supply can then be slipped in place and bonded together and to the car frame.

Current and voltage readings will be low unless the power supply and transmitter filaments get the proper voltage. The slight drop caused by the long leads can be tolerated if the car battery voltage is up to standard, but a run-down battery may cause trouble. The voltage at the transmitter will be variable because the voltage at the battery terminals ranges from 6 to 8 volts, depending on whether or not the car motor is running. Sufficient voltage will reach the equipment if the car motor is turning over at a speed which shows "charge" on the dash ammeter.

BIBLIOGRAPHY

[1] Chambers, "An Inexpensive 56-Mc. Exciter or Transmitter," *QST*, June, 1941. Chambers, "A Modulator and Power Supply for the Inexpensive 56-Mc. Transmitter," *QST*, August, 1941.

[2] Goodman and Bubb, "56-Mc. Transmitter for Mobile Work," *QST*, October, 1941.

[3] Goodman, "Double Beam-Power U.H.F. Transmitter," *QST*, December, 1940.

[4] Grammer, "Getting on 56-Mc. F.M.," *QST*, June, 1940.

CHAPTER SIXTEEN

Emergency and Portable

EMERGENCY self-powered equipment is no longer a nice toy to play with when regular amateur activities pall; it has become the moral obligation of every amateur to be prepared in case of any communications emergency. Large-scale disasters during the past few years have demonstrated the tremendous value of amateur emergency stations in relaying relief messages when all other communication channels are closed. Aside from the all-important emergency phase, the use of portable equipment has lately been extended through organized activity in the annual ARRL "Field Days," and the problem of providing equipment suitable for use in rural districts, where commercial power is not available, has always been with us. Recent developments have furnished approaches to the solutions of some of the problems, and it is the purpose of this chapter to analyze and summarize the general considerations involved in the self-powered field, and to offer certain suggestions.

The most vital need for self-powered equipment occurs in connection with emergency activity, and the basic design of all such equipment should be predicated on emergency use. Every amateur, no matter where he may be located, can reasonably expect that sometime he may be called upon to perform emergency communications duty, and it is his responsibility to the public welfare, to himself, and to amateur radio as a whole to see that he is in some measure prepared.

It is not to be expected that every amateur will prepare himself for an emergency by having available a complete and separate self-powered station, although a large number of individuals and club groups do so. There is, however, no reason why every amateur cannot prepare his station for an emergency by having an emergency power supply ready and a quick means for utilizing all or part of his regular station equipment as an emergency-powered station. The emergency power supply can be anything from a small vibrator supply and/or batteries to a large gasoline-driven generator. It is the purpose of this chapter to present data on available types of self-powered supplies and to show how regular station equipment can be prepared for emergency applications.

If it is considered desirable to build separate portable/emergency equipment, the small receivers and transmitters described in Chapters Eleven, Twelve, Fourteen and Fifteen are recommended.

• CHOICE OF POWER SUPPLY

There is a comparatively wide variety of self-generating power sources from which to choose. An analysis of the numerous available types should disclose which is the most suitable in the light of specific requirements, based on the criteria of utility, efficiency, performance and cost.

Dry batteries: Dry-cell batteries are the standard primary electrical energy source. They are ideal for receiver and low-power transmitter supplies because they provide steady, pure direct current with almost zero regulation. Their disadvantages are weight, high cost and limited current capability. In addition, they will lose their power even when not in use if allowed to stand for periods of a year or more. This makes them uneconomical if not used more or less continuously.

Table I shows the life to be expected from representative types of batteries under various current drains, based on intermittent service simulating typical operation. Continuous service life will be somewhat greater at very low current drains and from one-half to two-thirds the intermittent life at the higher current values.

The life figures given in the table are based on an end-point of 34 volts. This is considered to be the normal limit in average equipment. With suitable design of the apparatus to enable it to operate satisfactorily on about half voltage, the end-point can be extended to 24 volts, adding approximately 50% to the life of the battery in average use.

The secret of long battery life at normal current drains lies in intermittent operation. The duration of "on" periods should be reduced to a minimum. The more frequent the rests given a dry-cell battery, the longer it will last. As an example, one standard type will last 50% longer if it is operated for intervals of one minute with five minutes' rest in 24-hour intermittent operation than if it is operated continuously for four hours per day, although the actual wattage consumption in the 24-hour period is the same.

Storage batteries: The most universally acceptable self-contained power source is the storage battery. It has high initial capacity and can be recharged, so that its effective life is practically indefinite. It can be used to provide filament or heater power directly, and plate power through associated devices such as

TABLE I—BATTERY SERVICE HOURS

Estimated to 34-volt end-point per nominal 45-volt section
Based on intermittent use of 3 to 4 hours daily
(For batteries manufactured in U. S. A. only)

Manufacturer's Type No.	Weight		Current Drain in Ma.											
Eveready	Lb.	Oz.	5	10	15	20	25	30	40	50	60	75	100	150
386	14	—	2000	1100	690	510	400	320	200	170	130	100	50	30
486	13	5	1700	880	550	395	300	240	165	125	100	70	45	20
586	12	2	1400	800	530	380	260	185	130	85	60	40	30	14
585	8	13	900	450	290	210	130	100	60	45	25	20	11	5
762	3	3	320	140	81	54	37	27	—	—	—	—	—	—
482	2	—	320	140	81	54	37	27	—	—	—	—	—	—
738	1	2	160	70	30	20	10	7	—	—	—	—	—	—
733	—	10	50	20	11	7	5.2	—	—	—	—	—	—	—
455[1]	—	8.6	70	20	11	7	5.2	—	—	—	—	—	—	—

[1] Same life figures apply to 467, 67½-volt, 10.5 oz.

Estimated to 1-volt end-point per 1.5-volt unit
Based on intermittent use of 3 to 4 hours daily
(For batteries manufactured in U. S. A. only)

Manufacturer's Type No.	Weight		Voltage	Current Drain in Ma.										
Eveready	Lb.	Oz.		50	60	120	150	175	180	200	240	250	300	350
A-1300	8	4	1.25				2000	1715	1500	1333	1250	1200	1000	854
740	6	12	1.5				1400	1200		1050		775	625	
741[1]	2	14	1.5		1100	750				375	300	275	215	175
743	2	1	1.5		750	325				245		180	135	110
7111	2	2	1.5		700	320			200		120		90	
742	1	6	1.5		500	325			155	135	100	95	85	50
A-2300	15	8	2.5				2000	1715	1500	1333	1250	1200	1000	854
723	1		3.0		240	100			70		40		30	
746	1	3	4.5	200										
718[2]	3		6.0	375										

[1] Same life figures apply to 745, wt. 3 lbs.
[2] Same life figures apply to 747, wt. 3 lbs.

vibrator-transformers, dynamotors and genemotors, and a.c. converters. For emergency work a storage battery is a particularly successful power source since practically no matter what the circumstances such batteries are available. In a serious emergency it would be possible to obtain 6-volt storage batteries as long as there were automobiles to borrow them from, and, for this reason, the 6-volt storage battery makes an excellent unit around which to design the low-powered portable or emergency station.

For maximum efficiency and usefulness the power drain on the storage battery should be limited to 15 or 20 amperes from the ordinary 100- or 120-ampere-hour 6-volt battery. This should provide a carrier power when transmitting of 20 to 30 watts, which is usually adequate. In connecting the battery, heavy leads of the automotive cable type should be used, to minimize the voltage drop; ordinary car-receiver leads are definitely not satisfactory. Similarly, heavy-duty low-resistance switches are required.

Vibrator Power Supplies: The vibrator power supply consists of a specially-designed transformer combined with a vibrating interrupter. When the unit is connected to a storage battery the circuit is made and reversed rapidly by the vibrator contacts and the square-wave d.c. which flows in the primary of the transformer causes an alternating voltage to be developed in the secondary. This high-voltage a.c. is in turn rectified, either by a vacuum-tube rectifier or by an additional synchronized pair of vibrator contacts, and filtered, providing outputs as high as 400 volts at 200 ma. Tube rectifiers are ordinarily used only when the negative side of the circuit cannot be grounded, a requirement with the self-rectifying type. The high-voltage filter circuit is usually identical with that of an equivalent power source operating from the a.c. line. Noise suppression equipment, serving to minimize r.f. disturbances, is incorporated in the manufactured units.

Although vibrator supplies are ordinarily used with 6-volt tubes, their use with 2-volt

tubes is quite possible provided additional filament filtration is incorporated. This filter can consist of a small low-resistance iron-core choke, or the voice-coil winding of a speaker transformer. The field coil of a speaker designed to operate on 4 volts at the total filament current of the receiver may be used. The filaments are then connected in parallel, as usual, and placed in series with this winding across the 6-volt battery. On both 6- and 2-volt receivers "hash" can be reduced by heavily by-passing the battery at the vibrator supply terminals, using 0.25 to 1 μfd. or more, and by including an r.f. choke in the battery lead near the condenser. Noise will be minimized if a single ground, consisting of a short, heavy copper strap, is used. Thorough shielding will also contribute to the noise reduction.

Table II shows some of the available vibrator supplies that can be used for the emergency or portable power supply. Some of the commercial units include a hum filter and some do not, but the design of this filter is, for the most part, conventional. The vibrator supplies used with automobile receivers are satisfactory for receiver application but usually are not desirable for use with a transmitter except where the power requirements are slight. The efficiency of vibrator packs runs from 60% to 75%. Vibrator supplies are not intended to withstand much overloading, but fusing of the battery cable will eliminate any danger of failure through overloading. (*Bib. 1.*)

Dynamotors and Genemotors: A dynamotor is a double-armature high-voltage generator, the additional winding operating as a driving motor. It is usually operated from a 6-, 12- or 32-volt battery, and may deliver voltages from 300 to 1000 or more. Dynamotors have been widely used in military work and many of those in amateur use derive from such origins.

The genemotor is a refinement of the dynamotor designed especially for automobile receiver, sound truck and similar applications. It has found wide acceptance among amateurs as a source of transmitting power, having good regulation and efficiency combined with economy of operation. It is also used in connection with portable receiver installations, although a rather high inherent noise level limits this ap-

TABLE II — VIBRATOR SUPPLIES

Manufacturer's Type Number				Output		Rectifier	Output Filter
Am. Television and Radio Co.	Electronic Labs	Mallory	Radiart	Volts	Ma.		
VPM-F-7				90	10	Syn.	Yes
		VP-551[1]		125–150–175–200	100 max.	Syn.	No
			4201B[2]	250	50	Syn.	Yes
		VP-540		250	60	Syn.	Yes
			4204F[3]	100–150–250	35–40–60	Syn.	Yes
	605			150–200–250–275	35–40–50–65	Syn.	No
	604[4]	VP-552[5]		225–250–275–300	50–65–80–100	Syn.	No
			4201[6]	150–200–250–275–300	35–40–50–70–100	Syn.	No
	251[7]			300	100	Tube	Yes
		VP-555		300	200	Tube	Yes
VPM-6[8]	311[9]			250–275–300–325	50–75–100–125	Tube	Yes
		VP-557		400	150	Tube	Input condenser furnished
			4202D	300–400	200–150	Tube	Yes
	606[10]			325–350–375–400 and 110 a.c. 60 cycle	125–150–175–200 20 watts	Tube	Input condenser furnished

All inputs 6.3 volts d.c. unless otherwise noted.

[1] VP-553 same with tube rectifier.
[2] In weatherproof case. 4201B2 same with tube rectifier.
[3] 180-cycle vibrator, lightweight. 4204 same with no output filter.
[4] 601 same with tube rectifier; 602 same except 12 v. d.c input and tube rectifier; 603 same except 32 v. d.c. input and tube rectifier.
[5] VP-554 same with tube rectifier; VP-G556 same except 12 v. d.c. input; VP-F558 same except 32 v. d.c. input.
[6] 4200D same with tube rectifier; 4200DF same with tube rectifier and output filter.
[7] 551 same with 12 v. d.c. input.
[8] Also available without filter.
[9] 511 same except 12 v. d.c. input.
[10] Input 6 v. d.c. or 110 v. a.c., 607 same except 12 v. d.c. or 110 v. a.c. input; 608 same except 32 v. d.c. or 110 v. a.c. input; 609 same except 110 v. d.c. or 110 v. a.c. input.

plication in sensitive amateur high-frequency receivers.

Genemotors are made to fill almost every need. Their cost, at amateur net prices, runs from about eight to twenty-four dollars. Standard models range from 135 volts at 30 ma. to 300 volts at 200 ma. or 500 volts at 200 ma. as can be seen in Table III. Parallel and series operation of identical units to provide higher capacity is entirely practical. The normal efficiency averages around 50%, increasing to better than 60% in the higher-power units. The regulation is comparable to well-designed a.c. supplies; it is largely a result of external *IR* drops.

Successful operation of dynamotors and genemotors implies heavy, direct leads, mechanical isolation to reduce vibration, and thorough r.f. and ripple filtration (the purchase of manufactured filter units is recommended). The shafts and bearings should be thoroughly "run in" before regular operation is attempted, and the tension of the bearings should be checked occasionally.

A.c.-d.c. converters: In some cases it may be desirable to utilize existing equipment built for 115-volt a.c. operation in portable applications. To operate such equipment with any of the power sources outlined in the foregoing would require a considerable amount of rebuilding. This can be obviated by using a rotary converter capable of changing the d.c. from 6-, 12- or 32-volt batteries or 110 d.c. lines to 110-volt 60-cycle a.c. Such converter units are available from several manufacturers, with output ratings from 40 to 300 watts. Their cost runs from fifteen to fifty dollars at amateur prices.

The conversion efficiency of these units averages about 50%. In appearance and operation they are similar to genemotors of equivalent ratings, while the prices are approximately the same. The overall efficiency of the converter system will be lower because of the losses in the a.c. rectifier-filter circuits and the necessity for converting heater as well as plate power.

Generators: The plate supply systems outlined in the foregoing are, with the exception of the dry-cell batteries, designed to utilize the electrical energy stored in a storage battery. The problem then arises of securing the energy to be stored in the battery. If access to a.c.-operated chargers is not possible at times between actual use, some form of self-powered charging system is essential.

This need is ordinarily best met by a gasoline- or wind-driven generator. Water-power generators have been used, but their dependence on special circumstances is obvious, and they are not available in small sizes.

The windcharger consists of a small generator driven by a suitable impeller, mounted to take advantage of the free energy offered by the wind. The standard type costing in the neighborhood of twenty dollars will supply up to 16 amperes to a 6-volt battery. It will ordinarily keep fully charged a battery used to power a typical receiver and small transmitter operated from vibrator or genemotor supply in intermittent operation. (*Bib. 2.*)

Gasoline-driven generators are also available for use in charging 6-volt or larger batteries. These ordinarily are rated at 150 or 200 watts and cost in the neighborhood of forty dollars. A ½- or ¾-h.p. single-cylinder four-cycle en-

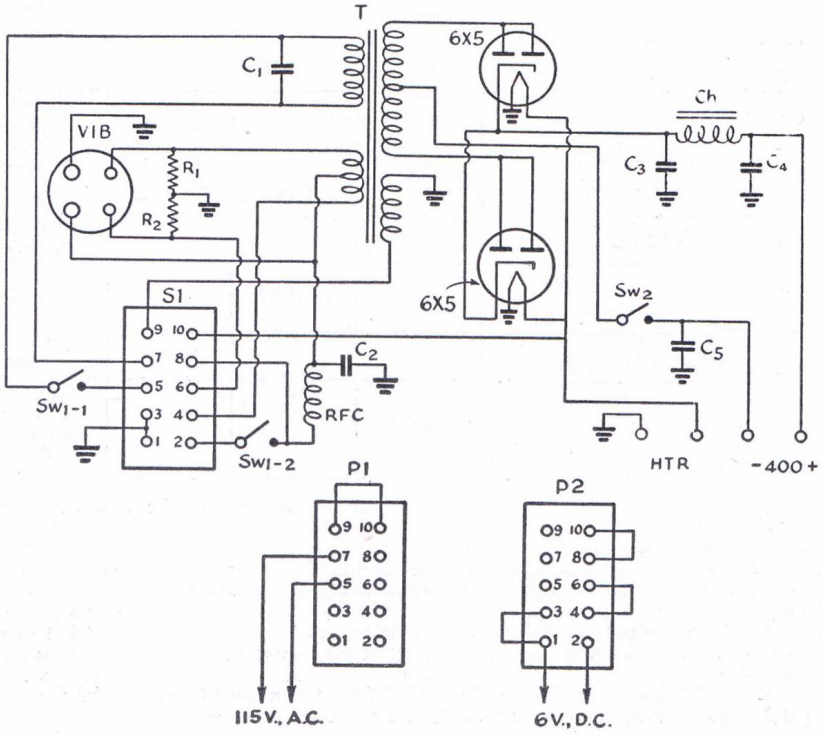

Fig. 1601 — Combination 6- and 115-volt power supply.

Ch — 120-ma. 4-henry filter choke (Thordarson T-49C91).
C_1 — 0.06-μfd. paper, 400-volt.
C_2 — 0.5-μfd. paper 200-volt.
C_3 — 8-μfd. electrolytic, 600-volt.
C_4 — 12-μfd. electrolytic, 450-volt.
C_5 — 10-μfd. electrolytic, 25-volt.
R_1, R_2 — 100 ohms, ½-watt.
T — 375-volt 135-ma. power transformer with 115-volt and 6-volt primaries (Thordarson T-14R40).
SW_1 — D.p.s.t. heavy duty toggle switch.
SW_2 — S.p.s.t. toggle switch.
S_1 — 10-contact male socket (Jones P-310-AB).
P_1, P_2 — 10-contact male plugs (Jones S-310-FHT).
RFC — 40 turns No. 14 enamelled wire, wound in two layers, ⅝" i.d.
Vib. — Mallory 825 or 294. 825 will handle more current.

TABLE III—DYNAMOTORS

Manufacturer's Type No.			Input		Output		Weight
Carter	Eicor	Pioneer	Volts	Amps.	Volts	Ma.	Lbs.
135A			6	1.8	135	30	6½
180A			6	2.2	180	30	6½
240A			6	3.3	200	40	6½
210A			6	6.3	200	100	6½
220A			6	13	200	200	6½
250A	102[1]	E1W272[2]	6	5	250	50	6½
251A		E1W339[3]	6	9	250	100	6½
277A			6	6	275	75	6½
301A	106[4]	E2W351[5]	6	9.7	300	100	6½
315A	158[6]	E2W243[5]	6	15	300	150	7⅞
320A		RAOW158[7]	6	19	300	200	9½
351A			6	10	350	100	6½
355A	108	E2W256[5]	6	15	350	150	7⅞
352A			6	22	350	200	9½
401A			6	13	400	100	7⅞
		E2W438	6	14.2	400	125	9¼
415A	109[8]		6	20	400	150	7⅞
420A			6	25	400	200	9½
425A		RA1W201[9]	6	30	400	225	9½
450A	110[10]		6	33	400	250	9½
		E3W413	6	15	500	100	11
515A	111[11]		6	24	500	150	9½
520AR		RA1W189[12]	6	33	500	200	—

[1] Input current 4.6 amp.; wt. 4⅝ lbs.
[2] Wt. 7½ lbs.
[3] Input current 7.5 amp.; wt. 7½ lbs.
[4] Wt. 5 lbs.
[5] Wt. 9¼ lbs.
[6] Input current 14 amp.; wt. 5¾ lbs.
[7] Wt. 16 lbs.; input current 18 amp.
[8] Input current 17 amp.
[9] Wt. 17½ lbs.; input current 25 amp.
[10] Input current 27.5 amp.; wt. 7⅝ lbs.
[11] Input current 21.5 amp.; wt. 7⅝ lbs.
[12] Input current 27 amp.; wt. 17½ lbs.

TABLE IV—GASOLINE ENGINE DRIVEN GENERATORS, AIR-COOLED

Manufacturer				Output		Weight	Starter
Eicor	Kato	Onan	Pioneer	Volts	Watts	Lbs.	
3AP6[1]			BD-6[1]	110 a.c. or 6 d.c.	300 200	100	Push-button
	JR-35[2]			110 a.c.	300	65	Push-button
	JRA-3[2]			110 a.c.	350	65	Rope crank
	19-A			110 a.c. or 6 d.c.	350 200	95	Push-button
		358[1] [3]		115 a.c.	350	91	Push-button
	JR-10[2]			110 a.c	400	—	Rope crank
		5L[3]		110 a.c.	500	165	Push-button
	23A			110 a.c. or 6 d.c.	500 200	105	Push-button
6AP1	14A		BA-6[1]	110 a.c.	600	135	Push-button
		7L[3]		115 a.c.	750	195	Push-button
10AP1		10L[3] [4]	BA-10[1]	110 a.c.	1000	170	Push-button
	26A			110 a.c.	1000	265	Manual
		OTC		110 a.c.	1500	135	Manual
			BA-15	110 a.c.	1500	365	Push-button

[1] Also available in remote-control models.
[2] Intermittent-duty model.
[3] Also available in manual-started type.
[4] 115-volt output; weight 200 lbs.

gine is used, which will operate for twelve or fifteen hours on a gallon of gasoline.

In higher-powered installations the use of intermediate storage batteries may be dispensed with, and a gasoline-driven generator supplying 110-volt a.c. directly may be employed. Such generators are ordinarily rated at a minimum of 250 or 300 watts, and cost fifty or sixty dollars. They are available up to two kilowatts, or big enough to handle the highest-power

amateur rig, at a cost of between three and four hundred dollars. Most are arranged to charge automatically an auxiliary 6- or 12-volt battery used in starting. Fitted with self-starters and adequate mufflers and filters, they represent a high order of performance and efficiency. Many of the larger models are liquid cooled, and they will operate continuously at full load.

A variant on the generator idea is the use of fan-belt drive. The disadvantage of requiring that the automobile must be running throughout the operating period has not led to general popularity of this idea amongst amateurs, although in San Francisco and Oakland an amateur emergency unit relies on it heavily. Such generators are similar in construction and capacity to the small gas-driven units.

The home construction of generators of all the above types has been successfully attempted by amateurs at times, although the possession of a considerable knowledge of electric motor design is essential. One especially useful possibility is the rewinding of old automobile charging generators, several hundred watts capacity being obtainable from the largest sizes. Those originally used on the old 4-cylinder Dodge cars have been successfully adapted by amateurs. Trade schools will often have their students rewind these generators for only the cost of the material, and this possibility is worth investigating. (*Bib. 3.*)

An example of portable/emergency power supply design capable of operation from either 115-volt a.c. or vibrator-interrupted 6-volt storage battery d.c. is shown in Figs. 1801 and 1802. It is built around a dual-primary transformer. Two power cables are provided, one ending in a standard a.c. male plug and the other in battery clips. Miniature multiple plugs connect these cables to the appropriate primary, open or close the vibrator circuit as required, and connect the heater circuit either to a 6.3-volt winding or to the storage battery.

A simple hash filter in the form of a choke wound of ordinary antenna wire and a fixed condenser minimizes vibrator interference sufficiently to make break-in operation satisfactory.

The circuit shows the negative high-voltage terminal ungrounded, permitting inclusion of a bias or microphone voltage dropping resistor if desired.

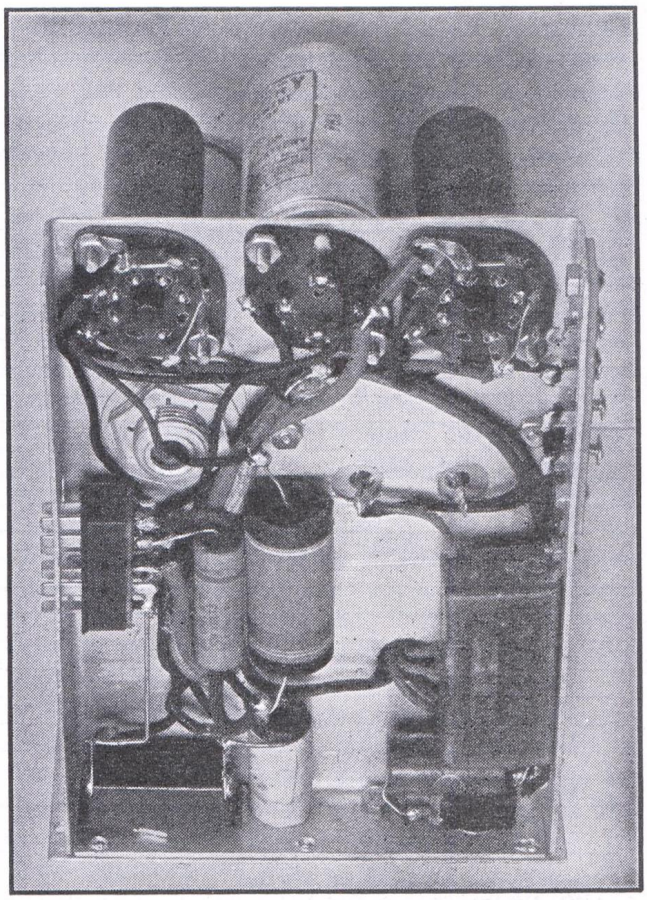

Fig. 1602 — The dual-primary power supply viewed from the bottom. Between the two rectifier tubes is mounted the plug-in vibrator. The primary r.f. choke can be seen between the two switches.

• PORTABLE EQUIPMENT—THE RECEIVER

The weakest link in the portable or emergency communications chain usually is the receiver. An inadequate receiver, with poor selectivity, low sensitivity and insufficient stability, can ruin a QSO even under favorable conditions. When it is remembered that conditions in portable or emergency operation are often more severe than those at home, with poor antenna facilities, high noise levels, severe interference, etc., the fallacy of attempting to use an inferior portable receiver is apparent.

The best procedure of all is to use the home station receiver for portable work. Headphones should be used and the output tube removed (if it isn't necessary for headphone operation), but this is no hardship. Headphones are far more satisfactory in such applications than the speaker in any event. This procedure not only ensures the availability of the high-performance receiver so vitally necessary, but the practice that has been obtained by using the receiver at home is invaluable in the specialized operating techniques of portable or emergency work. It takes as much experience to learn to run a receiver properly as it does to drive a car, and the middle of a crisis is no time to gain that experience. Even on lowered plate voltage the home superhet will be better than a makeshift.

If a special portable/emergency receiver is to be built, it should be a superheterodyne. With present-day tubes and components, it is possible to build a simple superheterodyne as cheaply as a t.r.f. receiver, and there is no comparison between the two in performance. The average communications superheterodyne can be operated with storage battery heater supply

and dry-cell or vibrator-pack "B" supply. With the audio power tubes removed from the receiver, the power requirements are not too great. Some of the receivers on the amateur market have provision at the rear of the set for plugging-in a d.c. supply, and those that don't can be easily modified by drilling a socket hole at the rear of the receiver and wiring it into the set. When regular a.c. operation is used, a plug in the socket completes the circuit.

• PORTABLE EQUIPMENT—THE TRANSMITTER

Owing to the difficulty in securing power for emergency, portable and rural transmitters, their design will depend almost entirely upon the power supply available. Considering possible defects in hastily-improvised radiation systems, etc., it seems unwise to use less than 10 watts input to a power amplifier or 15 watts to an oscillator. However, powers greater than two or three times these values are not usually necessary, so selection of the power supply will depend almost entirely upon the pocketbook and other resources. The 300-volt, 100-ma. vibrator supplies and genemotors represent a nice compromise unless it is possible to step into the 200- or 300-watt gasoline-driven generator class. (*Bib. 4.*)

Perhaps the best plan in providing for an emergency and portable transmitter is to utilize the basic exciter unit in the regular station. This not only ensures the availability of a reliable, efficient unit at all times but means a saving in parts and equipment. It represents no hardship to the permanent station to construct the exciter so it is compact, readily removable, and, above all, solidly and dependably assembled. If your present exciter is not adaptable to this use, plan the new one so it will be. Provision for 6-volt tubes throughout is essential, with the heater circuit so arranged that it can be connected to a storage battery without change. A suitable plate supply using a vibrator or genemotor or similar system should be available separately, arranged for ready connection. The best method is to have a socket and plug connector assembly, with one plug built into the transmitter and another, wired identically, connected permanently to the emergency supply.

• ANTENNA SYSTEMS

It is difficult to specify standard antenna systems for emergency or portable applications, because in all cases the location is the determining factor. As with most things, the simplest antenna is ordinarily the best.

One of the simplest systems is the end-fed antenna. A single half-wave on the lowest frequency to be used will radiate plenty of energy, providing a good part of its length is well above ground. If it is cut reasonably close to resonance efficient coupling is assured by connecting directly to the plate (through a variable condenser) or to a supplementary link-coupled tuned circuit.

If a transmission line is essential, it should be as well-constructed as possible. The single-wire-fed type is ideal if the feed line can be brought off the antenna at right angles. The tables shown in Chapter Ten for this type of antenna should be followed closely.

A low-impedance two-wire line is excellent if the antenna is to be an integral part of the portable station, since if it is too long it can be coiled up out of the way. Rubber-covered lamp cord will make a fair feed line, the slight mismatch accounting for only a small loss of power. For the meticulous, one of the special 72-ohm lines can be used.

The familiar tuned transmission line, of either the Zepp or center-fed types, is next in preference. It is dependable in performance but somewhat more complicated to erect. The antenna coupling system should be extremely flexible with this type, with tapped coils and choice of series and parallel connections to accommodate any feeder length.

Emergency antennas may be erected with insulation of dry hard wood, glass towel bars, porcelain ware, etc., with wire salvaged from broken communications (not power!) lines or similar sources. If it is impossible to erect resonant lengths of wire, impedance-matching systems such as that shown in Chapter Ten can be used. Tuning can be accomplished by plate milliammeter, neon bulb, or a flashlight bulb in series with the antenna.

Probably the most straightforward preparation for different conditions is to include several lengths of rope with the portable antenna, so that a line may be thrown into a tree or dropped out of a window. Portable masts can be built but involve rather serious constructional difficulties.

• REGULATIONS

The F.C.C. regulations covering amateur portable and emergency work should be studied thoroughly by every amateur. See Chapter Twenty-Two.

BIBLIOGRAPHY

[1] Goodman, "Vibrator Power Supplies," *QST*, Nov., 1941.

[2] "Getting Power from the Winds," *QST*, March, 1934. Lynch, "A More Efficient Impeller for Wind-Driven Generators," *QST*, April, 1935.

[3] Burchfield, "Rewinding an Auto Generator for Portable-Emergency 110-Volt A.C. Supply," *QST*, Nov., 1937.

[4] "Portable-Emergency Transmitters," *QST*, August, 1939. Austin, "A Different Portable-Emergency Transmitter." *QST*, July, 1940. Chambers, "A Compact Portable Emergency Transmitter," *QST*, April, 1941. Roberts, "A Portable Emergency Transmitter for Vibrator Power Supply," *QST*, April, 1941. Hadlock, "A Versatile Portable-Emergency Transmitter," *QST*, July, 1941.

CHAPTER SEVENTEEN

Antenna Construction

• ANTENNA AND FEEDER MATERIALS

THE USE of good materials in the antenna system is just as important as in the transmitter or receiver — perhaps more so, since the antenna is exposed to wind and weather. To keep electrical losses low, it is essential that the wires composing the antenna and feeder system have good conductivity, and that the insulators have low dielectric loss and low surface leakage, particularly when wet, in addition to adequate mechanical strength.

For short antennas an entirely satisfactory conductor is No. 14 gauge hard-drawn enamelled copper wire. For long antennas and directive arrays No. 14 or No. 12 enamelled copper-clad steel wire should be used to prevent stretching, insofar as possible. It is best to make feeders of ordinary soft-drawn No. 14 or No. 12 enamelled copper wire, since it will be found difficult to make a neat-looking feeder with hard-drawn or copper-clad steel wire unless it is under considerable tension at all times. Every effort should be made to make the wires in one piece so that the only joints are at the output terminals of the transmitter. Where joints cannot be avoided they should be carefully soldered.

In building a resonant two-wire feeder as much care should be taken with the quality of insulation used in the spacers as is taken with the antenna insulators proper. For this reason one of the many good ceramic spacers available should be used. Wooden dowels boiled in paraffin can be used with untuned lines, but their use is not recommended for tuned lines. The wooden dowels can be attached to the feeder wires by drilling small holes in them and then binding them to the feeders with wire.

It should be kept in mind that the ends of tuned feeders or the ends of the antenna are points of maximum voltage. It is at these points that the insulation is most important, and Pyrex glass, isolantite or steatite insulators with long leakage paths are recommended. Glazed porcelain also is good. Insulators should be cleaned once or twice a year, especially if they are subjected to much smoke and soot.

• SUSPENSIONS

It is impossible to give more than general suggestions for the suspension of the antenna since the methods used will vary so widely in individual instances. In most cases poles or masts are desirable to lift the antenna clear of surrounding buildings, but in some locations the antenna will be in the clear when strung from one chimney to another or from a chimney to a tree. Small trees are not usually satisfactory as points of suspension for the antenna on account of their movements in windy weather. If the antenna is strung from a point near the center of the trunk of a large tree this difficulty is not as serious. If the antenna must be strung from one of the smaller branches, it is best to tie a pulley firmly to the branch and run a rope through the pulley to the antenna, with the other end of the rope connected to a counterweight near the ground. The counterweight will keep the tension on the antenna wire practically constant, even when the branches sway and when the rope tightens and stretches under varying climatic conditions.

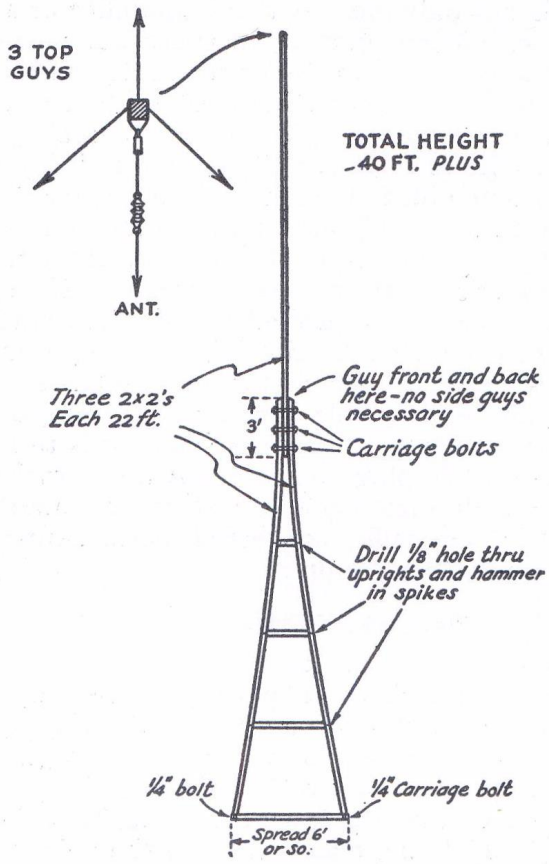

Fig. 1701 — Details of a 40-foot mast suitable for erection in locations where space is limited.

• "A"-FRAME MAST

A very simple and inexpensive mast is shown in Fig. 1701. This design is very popular and is satisfactory for heights up to 35 or 40 feet. In addition to the 2 × 2 lumber, the only materials required are five ¼" carriage bolts 5½" long (with washers), a few spikes, about 300 ft. No. 12 galvanized iron wire and several small strain insulators. These should be used about every 10 or 12 feet to break the guy wires into sections. Clear, sound lumber should be selected. The mast may be protected by two or three coats of house paint or, preferably, aluminum paint.

If the mast is to stand on the ground, a couple of stakes should be driven to keep the bottom from slipping. The mast may be "walked up" by a pair of helpers. If it is to go on a roof, first stand it up against the side of the building and then hoist it, from the roof, keeping it vertical. The whole assembly is light enough for two men to perform the complete operation — lifting the mast, carrying it to its permanent berth and fastening the guys — with the mast vertical all the while. It is therefore entirely practicable to put up this kind of mast on a small flat area of roof.

By using 2 × 3 or 2 × 4 lumber of suitable length, the height of such a mast may be extended up to about 50 feet. The 2 × 2 is too flexible to be satisfactory at such heights.

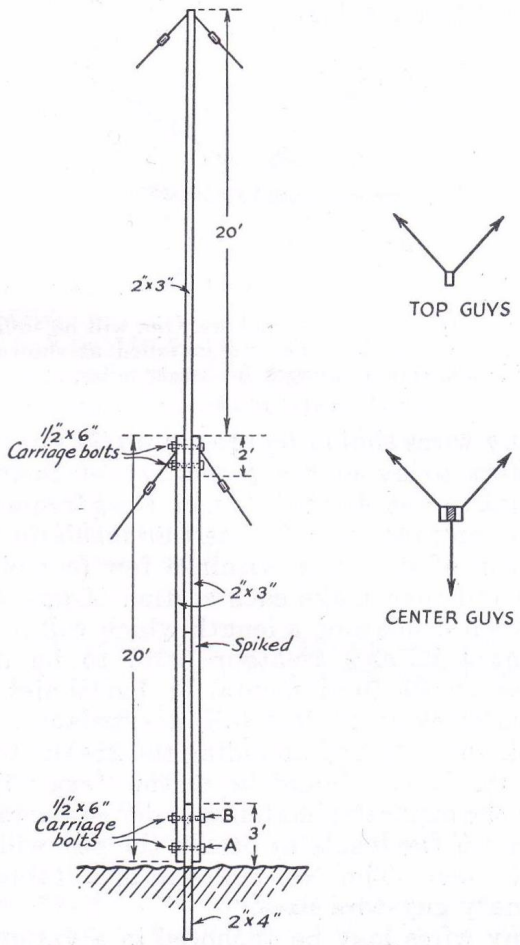

Fig. 1702 — **A simple and sturdy mast for heights in the vicinity of 40 feet, pivoted at the base for easy erection. The height can be extended to 50 feet or more by using 2 x 4's instead of 2 x 3's.**

• SIMPLE MAST

The mast shown in Fig. 1702 is relatively strong, easy to construct, and costs very little. Like the "A" frame, it is suitable for heights of the order of 40 feet. It is easily dismantled in case it has to be moved.

The top section is a single 2 × 3, bolted at the bottom between a pair of 2 × 3's with an overlap of about 2 feet. The lower section thus has two legs spaced the width of the narrow side of a 2 × 3. At the ground, the two pieces are bolted to a 2 × 4 which is set in the ground. A short length of 2 × 3 is set between the two legs about half way up the bottom section to maintain the spacing. Four ½ × 6 carriage bolts are needed, along with washers; this length is sufficient since the "2 × 3's" actually are about 1¾ × 2½ inches. All pieces of lumber are set so that the long axis faces the antenna direction.

It will be sufficient to guy the mast as shown in the drawing. The two back guys at the top pull against the antenna, while the three lower guys prevent any buckling at the center of the pole. The two sets of back guys may be anchored at the same point. For a height of about 40 feet, the guys should be anchored 15 feet or more from the bottom of the pole.

The length of 2 × 4 which is set in the ground should be placed so that it faces the proper direction, and should be made vertical by lining it up with a plumb bob. The holes for the bolts should be drilled beforehand. The lower section is then laid on the ground so that bolt *A* can be slipped in place through the three pieces of wood and tightened just enough so that the section can turn freely on the bolt. Then the top section is bolted in place and the mast pushed up, using a ladder or another 20-foot 2 × 3 for the job. As the mast goes up the slack in the guys can be taken up so that the whole structure is in some measure continually supported. When the mast is vertical bolt *B* is slipped in place and both *A* and *B* tightened. The lower guys can next be given a final tightening, leaving those at the top a little slack until the antenna is pulled up, when they can be adjusted to pull the top section into line with the bottom.

The 2 × 4 should extend at least 3 feet into the ground, and should set solidly. Concrete is not necessary, but it will help to pack rocks in the hole to provide some bracing. The pole will stand without guying when the two bottom bolts are in, which does away with the necessity for having a helper on each guy while the mast is being raised.

• T-SECTION MAST

A type of mast construction suitable for heights up to about 80 feet is shown in Fig. 1703. The mast is built up by butting 2 × 4 or 2 × 6 timbers edgewise against a second 2 × 4, as shown at A, with alternating joints in the edgewise and flatwise sections as shown at *B*. The construction can be carried out to greater lengths than shown simply by continuing the 20-foot sections. It will be noted that one or both ends must end with a 10-foot section on either the edgewise or flat timbers. Longer or shorter sections may be used if more convenient.

The method of making the joints is shown at C. Quarter-inch or 3/16 inch iron, 1½ to 2 inches wide, is recommended for the straps, with half-inch bolts to hold the pieces together. In addition, a bolt should be run through the pieces midway between joints to provide additional rigidity.

Although there are many ways in which such a mast can be secured at the base, the "cradle" illustrated at D has many advantages. Heavy timbers set firmly in the ground, just far enough apart so that the base of the mast will pass through them, hold a large carriage bolt or steel bar which serves as a bearing. This passes through a hole in the mast so that the latter is pivoted at the bottom. As the mast swings upward in an arc while being raised, the bottom is free to pivot on the bearing.

The job of raising the mast can be simplified, when a bottom bearing of this nature is used, because half of the guys can be put in place and tightened up before the mast leaves the ground. Four sets of guys should be used, one in front, one directly in the rear, and two on each side at right angles to the direction in which the mast will face. Since the base position is fixed by the bearing, all the side guys can be put in place, anchored and tightened while the mast is lying on the ground. Thus there is no danger of sidesway or bending while the mast is going up, and a smaller crew can do the job. A set of guys should be used at each of the joints in the edgewise sections, the guy wires being wrapped around the pole rather than fastened to bolts or passed through holes in the pole, as either of the latter two methods tend to weaken the joint.

For heights up to 50 feet, 2 × 4's may be used throughout. For greater heights it is advisable to use 2 × 6's for the edgewise sections, although 2 × 4's will be satisfactory for the flat sections.

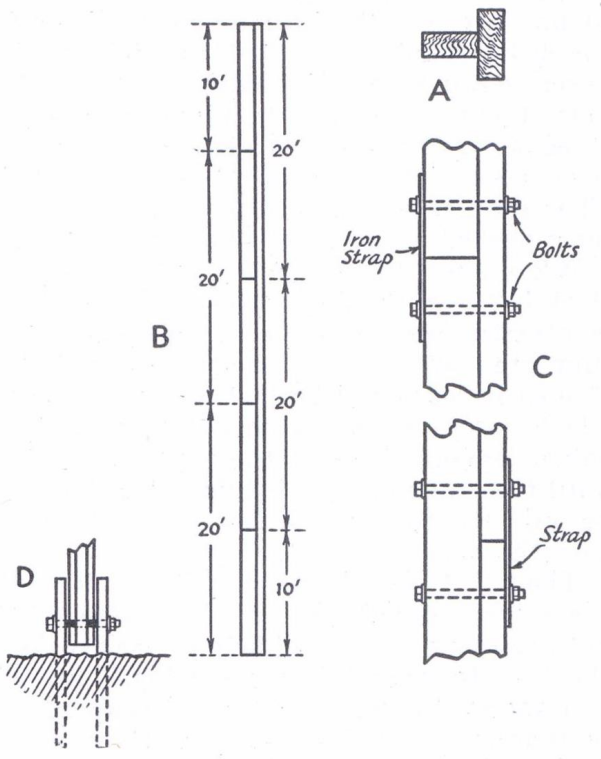

Fig. 1703 — T-section mast made from overlapping 2 x 4's or 2 x 6's.

• GUYS AND GUY ANCHORS

For poles up to about 50 feet, No. 12 iron wire makes a satisfactory guy (No. 12 in this wire is considerably heavier than in copper). A heavier size, or stranded cable, can be used for taller poles or poles installed in locations where the wind velocity is high.

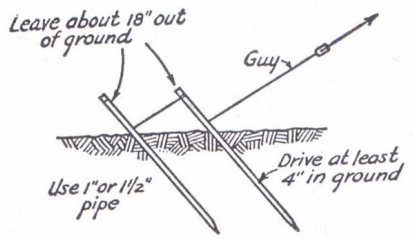

Fig. 1704 — Pipe guy anchors. One will be sufficient for small masts, but the two installed as shown will provide additional strength for larger poles.

Guy wires should be broken up by strain insulators to avoid the possibility of their becoming resonant at the transmitting frequency. Common practice is to insert an insulator near the top of each guy within a few feet of the pole and then make each section of guy wire, between insulators, a length which will not be resonant in any amateur band to be used, either on its fundamental or harmonics. An insulator every 25 feet will be satisfactory for all bands up to and including the 28-Mc. band. The insulators should be of the "egg" type, with the insulating material under compression so that if the insulator breaks the guy will not come down. The No. 500 size is suitable for ordinary guy-wire sizes.

Guy wires may be anchored in a variety of ways. Simplest of all is to anchor the wires to a tree or building, when they happen to be in convenient spots. For small poles a 6-foot

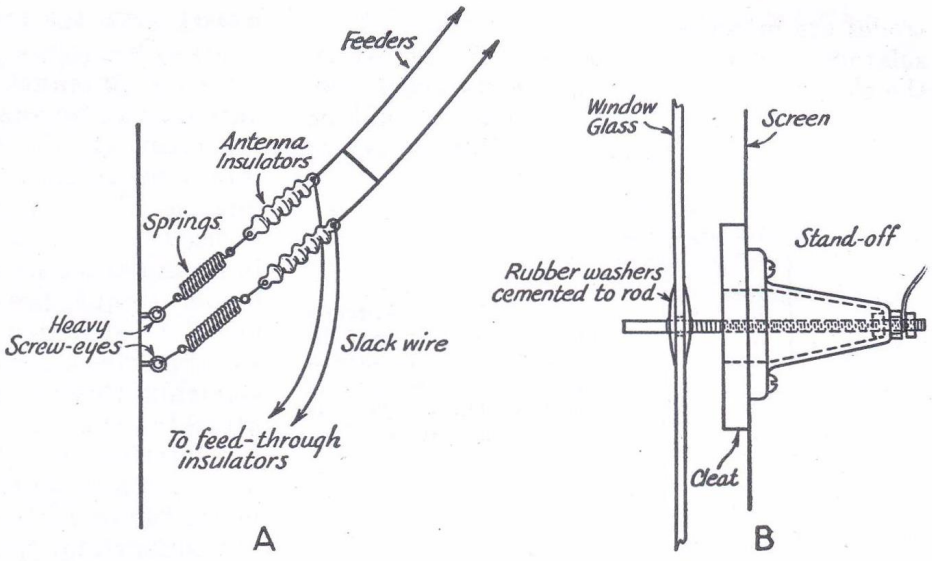

Fig. 1705 — A — Anchoring feeders to take strain from feed-through insulators or window glass. B — Going through a full-length screen. The cleat is fastened to frame of screen on inside of screen. Clearance holes are cut in the cleat and also in the screen.

length of pipe (about 1-inch diameter) driven into the ground at an angle, with the bottom of the pipe pointing to the base of the pole, will suffice. Additional bracing can be provided by using two pipes as shown in Fig. 1704.

• HALYARDS AND PULLEYS

A free-running pulley and a long-lived halyard are definite assets to an antenna system. Common clothesline rope will be strong enough for small antennas, but does not stand the weather too well and should be renewed fairly frequently. Sashcord is better, but still not weather resistant. A satisfactory halyard is ⅜- or ½-inch waterproofed manila rope, the larger size being needed only to hold long stretches of wire.

Ordinary rope or cord can be waterproofed by soaking it a day or two in automobile top-dressing.

It will pay to purchase good-quality pulleys. A good grade of galvanized iron pulley will be satisfactory in locations where the atmosphere is free from salt, but at seashore locations a pulley intended for marine use should be used. One of the best types is a hardwood block with bronze roller-bearing shaft, which will stand up well and resist corrosion under adverse conditions.

• BRINGING THE ANTENNA OR TRANSMISSION LINE INTO THE STATION

In bringing the antenna or transmission line into the station, the line should first be anchored to the outside wall of the building, as shown in Fig. 1705, to remove strain from lead-in insulators. When permissible, holes cut directly through the walls of the building and fitted with feed-through insulators of suitable size are undoubtedly the best means of bringing the line into the station. The holes should have plenty of air clearance about the conducting rod, especially when tuned lines, which develop high voltages, are employed. Probably the best place to go through the walls, from the standpoint of appearance, is the trimming board at the top or bottom of a window frame which provides flat surfaces for tightening lead-in insulators. Cement or rubber gaskets may be used to water-proof the exposed joints.

Where such a procedure is not permissible, the window itself usually offers the best opportunity. One satisfactory method is to drill holes in the glass near the top of the upper sash. If the glass which is to be drilled is replaced by plate glass, a stronger job will result. Plate glass may be obtained reasonably from automobile junk yards and may be drilled before placing in the frame. The glass itself provides the necessary insulation and the transmission line may be fastened to bolts fitting the holes. Rubber gaskets cut from inner tube will render the holes water-proof. The lower sash should be provided with stops at a suitable height to prevent damage when it is raised. If the window is fitted with a full-length screen, the scheme shown in Fig. 1705-B may be used.

In a less permanent method, the window is raised from the bottom or lowered from the top to permit the insertion of a board three or four inches wide which carries the feed-through insulators. This arrangement may be made weatherproof by making an overlapping joint between the board and window sash, as shown in Fig. 1706, and covering the opening between upper and lower sashes with a sheet of soft rubber cut from an inner tube.

• LIGHTNING PROTECTION

An ungrounded radio antenna, particularly one large and well elevated, is a lightning hazard. When grounded, it provides a measure of protection. Therefore, grounding switches or lightning arresters should be provided. Examples of construction of low-loss arresters are shown in Fig. 1707. At A, the arrester elec-

trodes are mounted by means of stand-off insulators on a fireproof asbestos board. At B, the electrodes are enclosed in a standard steel outlet box. In each case, the gaps should be made as small as possible without danger of

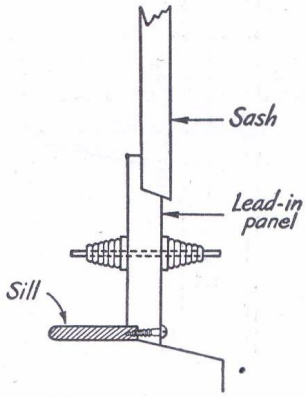

Fig. 1706 — Antenna lead-in panel. It may be placed over the top sash or under the lower sash of window. The overlapping joint makes it weatherproof.

break-down during transmitter operation. Lightning systems require the best ground connection obtainable.

The most positive method is to ground the antenna system when it is not in use; grounded flexible wires provided with spring clips for making connection to the feeder wires may be used. The ground lead preferably should be short and if possible should run directly to a good ground (such as a driven pipe or water pipe where it enters the ground) outside the building.

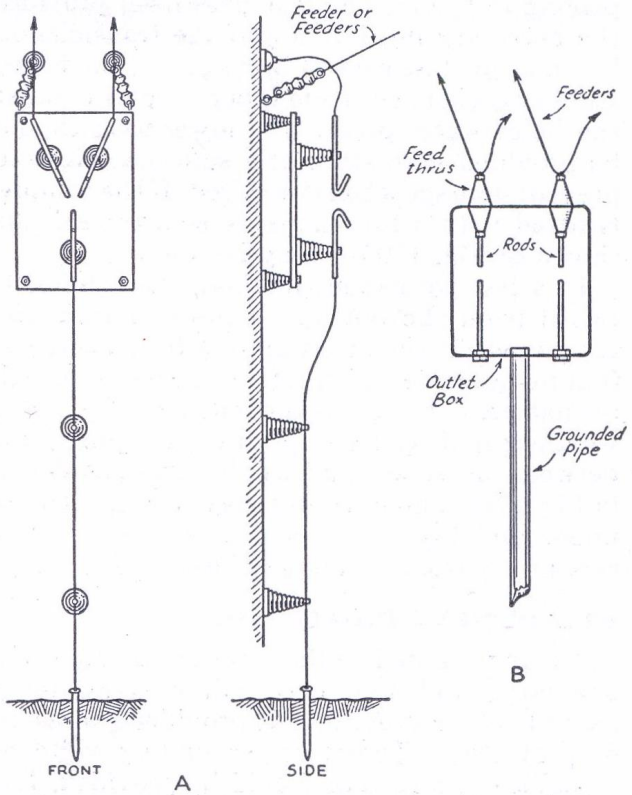

Fig. 1707 — Low-loss lightning arresters for transmitter installations.

• ROTARY BEAM CONSTRUCTION

Many amateurs mount the simpler types of directive antennas in such a way that the antenna can be rotated to shift the direction of the beam at will. Obviously the use of such rotary antennas is limited to the higher frequencies if a structure of practicable size is to be used. For this reason the majority of rotary beam antennas are constructed for 14 Mc. and higher frequencies. The problems in rotary beam construction are those of providing a suitable mechanical support for the antenna elements, furnishing a means of rotation, and attaching the transmission line so that it does not interfere with the rotation of the system. The antenna elements are usually made of metal tubing so they will be at least partially self-supporting, thus simplifying the rotating structure. The large diameter of the conductor

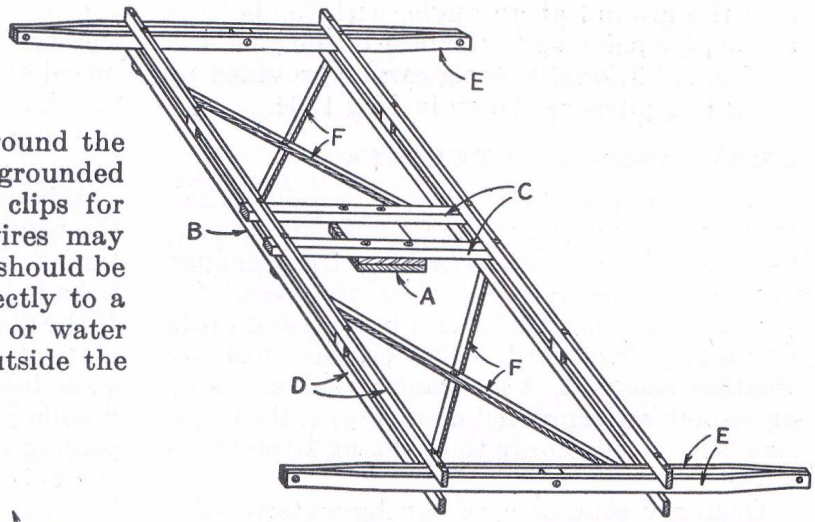

Fig. 1708 — Easily-built supporting structure for horizontal rotary beams. Made chiefly of 1 x 2's, the structure is strong yet light-weight. Antenna elements are supported on stand-off insulators on the "E" arms. The length of the "D" sections will depend upon the element spacing.

is also beneficial in reducing resistance, which is an important consideration when close-spaced elements are used.

When the elements are horizontal it is necessary to make a supporting structure, usually of light but strong wood. Dural tubes often are used for the elements, and thin-walled corrugated steel tubes with copper coating also are available for this purpose. The elements frequently are constructed of sections of telescoping tubing, making length adjustments quite easy. Electricians' thin-walled conduit also is a suitable material for rotary-beam elements.

An easily-constructed supporting frame for a horizontal rotary beam is shown in Fig. 1708. It may be made of 1 × 2 lumber, preferably oak for the center sections, with white pine or cypress for the outer arms. The self-supporting

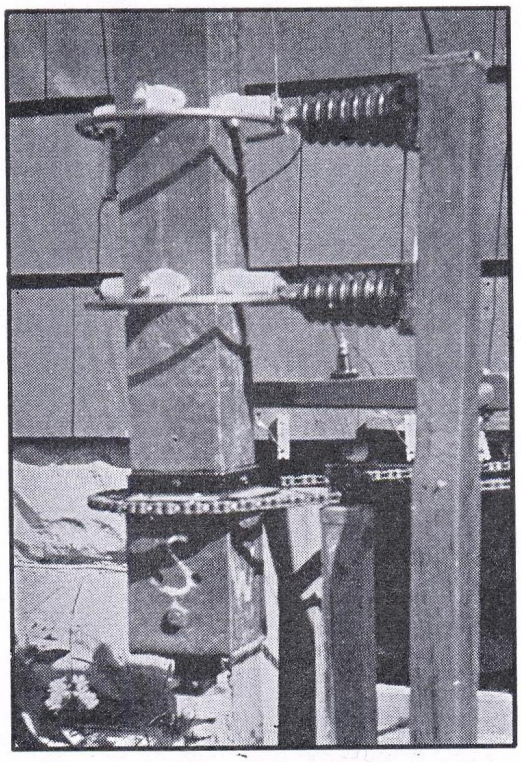

Fig. 1709 — One form of rotating mechanism. A bicycle sprocket and chain turn the pole which supports the beam antenna. Feeder connections from the antenna are brought to the metal rings, which slide against spring contacts mounted on the large stand-offs on the short pole.

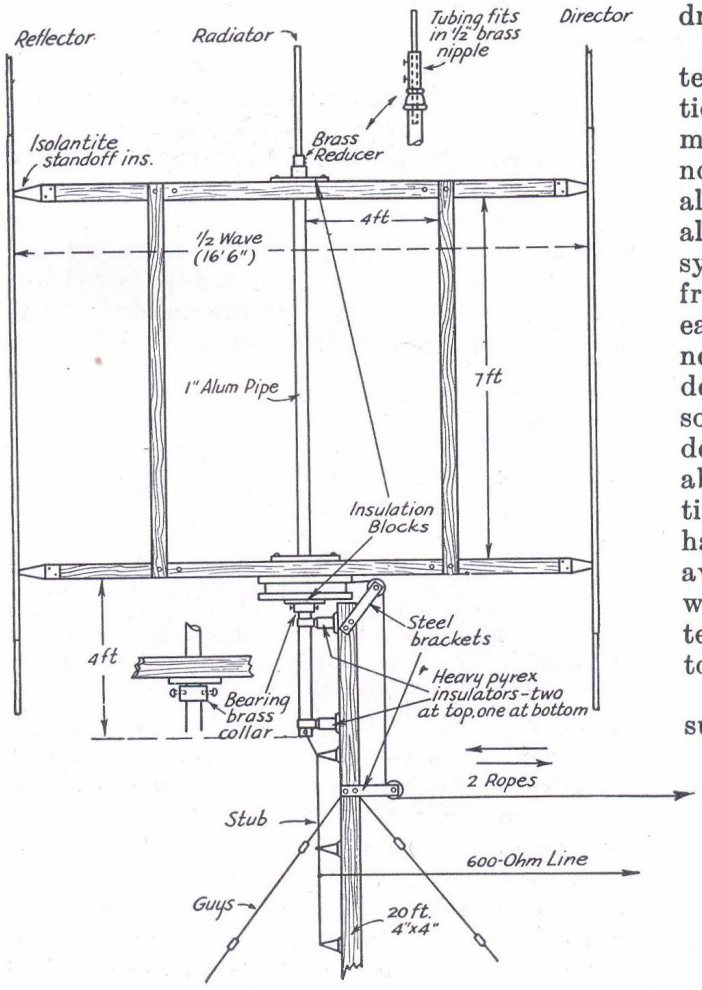

tubing antenna elements are intended to be mounted on stand-off insulators on the arms marked *E*. The square block at the center (*A*) may be fastened to the pole by any convenient means. The dimensions of such a structure will, of course, depend upon the type of antenna system used. It is particularly well suited to a half-wave antenna with a single director or reflector on 14 Mc., or a three-element beam on 28 Mc. For 56 Mc. the dimensions may be reduced proportionally. (Bib. 1.)

Various means of rotation and of making contact to the transmission line have been devised. One method is shown in Fig. 1709. In this case the supporting pole is rotated by a chain and sprocket arrangement, with the base of the pole resting on a bearing. Feeders are brought down the pole from the antenna to a pair of wire rings, against which sliding contacts press. (Bib. 2.)

Parts from junked automobiles often provide gear trains and bearings for rotating the antenna. Rear axles, in particular, can readily be adapted to the purpose. Some amateurs use motor-driven rotating mechanisms which, although complicating the construction, simplify remote control of the antenna. More or less elaborate indicating devices to show, in the operating room, the direction in which the antenna is pointed, often are used with motor-driven beams.

The full benefit of a rotating directive antenna is realized when the system is unidirectional, since such an antenna offers the maximum possibility of reducing interference and noise in reception. A unidirectional antenna also reduces interference to other stations not along the line of transmission. Bidirectional systems, while somewhat less advantageous from this standpoint, are, however, somewhat easier to build mechanically, because it is only necessary to rotate the antenna through 180 degrees rather than 360. Feeder contact is not so difficult in such a case. When the antenna is designed for 360-degree rotation, it is preferable to have the feeders arranged so that continuous rotation is possible, rather than to have a stop at some point on the circle. This avoids the necessity for retracing almost the whole circle when it is desired to move the antenna the few degrees from one side of the stop to the other.

Fig. 1710 shows a mechanical arrangement suitable for vertical elements. The antenna,

Fig. 1710 — A practical vertical-element rotatable array for 28 Mc. No special feeder-contact mechanism is needed, since the driven antenna is fixed. The reflector and director, parasitically excited, rotate around it. Close-spaced elements may be used if desired.

which is a vertical section of metal tubing, is fixed in position and is provided with a director and reflector which rotate about it. The advantage of this arrangement is that no provision need be made for special contacts between the antenna and the feeder system, since the position of the antenna is fixed. A rope and pulley arrangement provides rotation from the operating room, so that when a signal is picked up the antenna can be rotated rapidly to the position which gives maximum response. It is then also pointing in the proper direction for transmission to the same station. The antenna system shown can be varied in details, of course; for instance, close spacing might be used between the parasitic elements and the antenna to give somewhat greater gain. (Bib. 3.)

•U.H.F. ANTENNAS

Although antennas for ultra-high frequencies are constructed on exactly the same principles as those for the lower frequencies (Chapter 10), the smaller dimensions make possible structural arrangements which would be unwieldy, if not impossible, on lower frequencies. The extended double Zepp, when used vertically, is particularly easy to mount, the elements being made of quarter-inch copper or dural rod or tubing and fastened to the side of a pole by means of stand-off insulators. Two arrangements are shown schematically in Fig. 1711, and a practical installation is pictured in Fig. 1712. The open-wire feeder is better if the line is long, since the losses will be lower than with twisted pair. (Bib. 4.)

A simple application of the end-fire principle is shown in Fig. 1713. Two lengths of copper tubing are bent to form a "pitchfork" a half-wavelength long (down to the bend) and with a quarter- to an eighth-wavelength separation. If the pole can be made to rotate 180°, full advantage can be taken of the directivity of the system. A tuned feeder may be used if the length is not more than one or two wavelengths; for greater lengths an untuned line and a matching stub are desirable. (Bib. 5.)

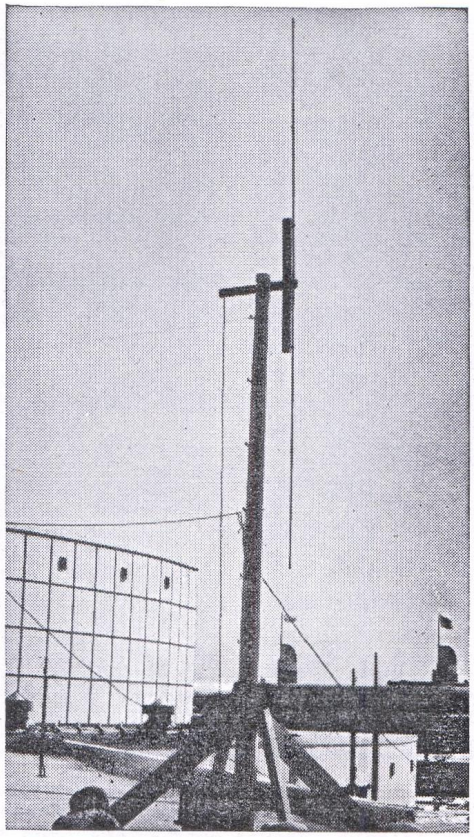

Fig. 1712 — A 56-Mc. extended double Zepp antenna Dimensions are given in Fig. 1711.

Combination arrays, described in Chapter 10, give good gains and are not too difficult to construct. Practical applications are shown in Figs. 1714 and 1715. The elements can be of wire or copper tubing, and the assembly can be simply wires hung from a rope stretched between two supports or it can take the form of a more permanent structure, as shown in the photographs.

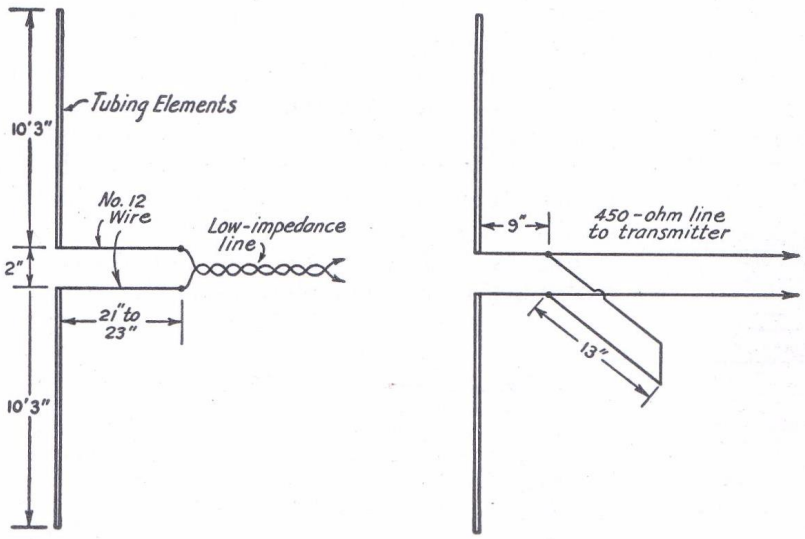

Fig. 1711 — Two methods of feeding an "extended double Zepp" type of collinear array. The dimensions given are for the 56-Mc. band, and should be halved for 112 Mc. The 450-ohm line can be made of No. 12 wire spaced 2 inches. The stub should be adjusted until there is a minimum of change in the final tank circuit tuning when the line is coupled to the transmitter.

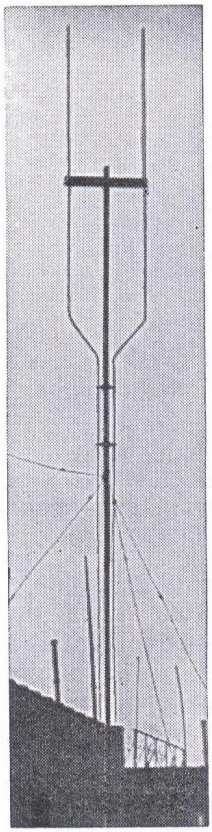

Fig. 1713 — A simple form of end-fire array as used at W2JCR. The two copper-tubing elements are curved in and run down the pole to form part of the feed line.

• MOBILE ANTENNAS

For mobile work on ultra-high frequencies a rod or "whip" antenna is frequently used, generally mounted vertically from one or a pair of stand-off or feed-through insulators fastened to the car body. If possible, the antenna should be a half wavelength long, since this length will give best low-angle radiation of any of the simple antennas. A quarter-wave antenna, working against the metal car body as a counterpoise or "ground," can be used but is not as efficient a radiator as the half-wave antenna. The antenna should be placed as high on the car as circumstances permit.

It is advantageous to mount the antenna near the transmitter so that the feeder will be short. This will obviate the necessity for special feeder systems, such as concentric lines, which are highly desirable if the antenna is at one end of the car and the transmitter at the other. A quarter-wave tuned line is a suitable feeder, using appropriate tuning methods. When used with an end-fed half-wave antenna, the feeder end not connected to the antenna may either be left open or grounded to the car body.

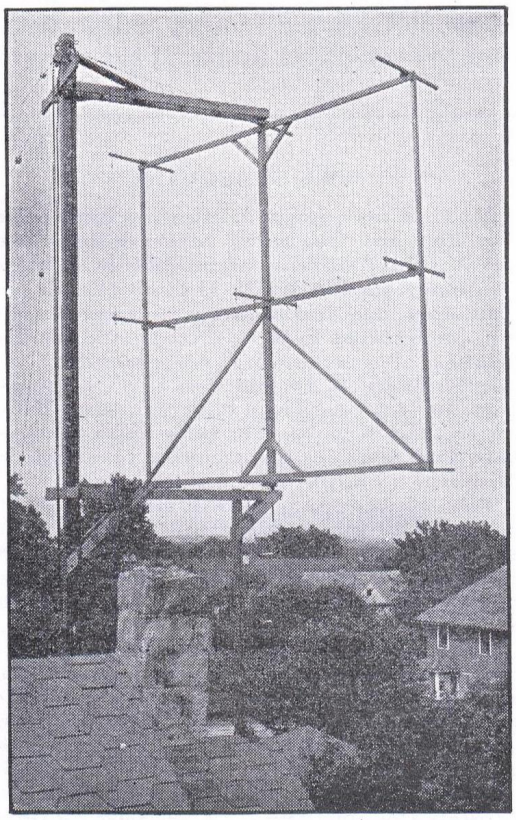

Fig. 1714 — The 112-Mc. array at W2CUZ uses two collinear sets of three broadside driven elements, backed by parasitic reflectors. This type of construction allows rotation of the system.

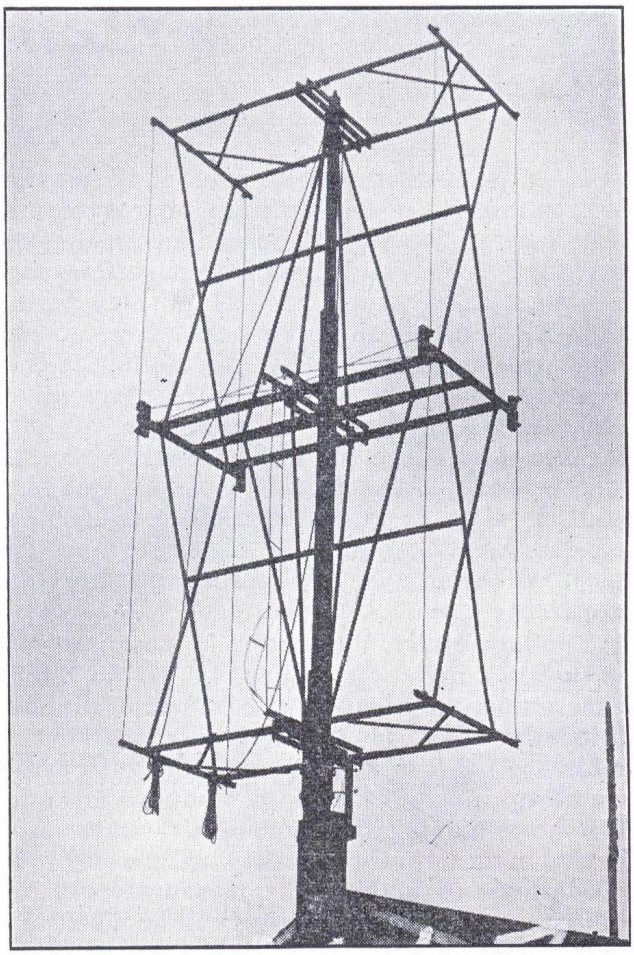

Fig. 1715 — A 56-Mc. 8-element antenna having two broadside sets of collinear elements backed by parasitic reflectors. This antenna, at W1AZ, is built to withstand any kind of weather.

BIBLIOGRAPHY

[1] Lynch, "Some Thoughts on Rotary Beam Antennas," *QST*, October, 1938.

[2] Blaho, "Simplifying the Rotary Antenna Mechanism," *QST*, October, 1938.

[3] Neuenhaus and Schreiner, "A Continuously-Rotatable 28-Mc. Beam," *QST*, March, 1938.

[4] Lynch, "More Thoughts on Effective Antennas," *QST*, November, 1939.

[5] Taylor, "Diversity with What You Have," *QST*, September, 1939.

CHAPTER EIGHTEEN

Measurements and Measuring Equipment

THE PROPER OPERATION of all but the very simplest of transmitters and receivers calls for the use of measuring instruments of various types. While the amateur station can be operated successfully with nothing more than a means for checking transmitter power input and frequency — and modulation, in the case of a 'phone transmitter — the progressive amateur is interested in instruments and measurements as an aid to better performance. The measure of the perfection of an amateur station, once a satisfactory transmitter and receiver have been provided, is the extent and utility of the auxiliary measuring and checking apparatus provided.

Fundamentally, the process of measurement is that of comparing a quantity with a reference standard. Measuring equipment divides into two types: (1) fixed *standards* giving a reference point of known accuracy, with associated equipment for making comparisons, and (2) direct-reading instruments or *meters* calibrated in terms of the quantity being measured.

Methods of making the measurements required in the amateur station will be discussed in this chapter and representative instruments used in making these measurements will be described.

• FREQUENCY MEASUREMENT

Dependable frequency-measuring equipment is desirable in the amateur station for several closely-related purposes:

To insure that the transmitter is operated in the desired frequency band;
To set the transmitter to a desired frequency (if a self-controlled oscillator is used);
To determine the frequency of a received station, or to calibrate the receiver;
To determine the harmonic at which a frequency multiplier stage operates;
To determine the harmonic output of the transmitter.

Sec. 12.135 of the FCC Regulations states:

The licensee of an amateur station shall provide for measurement of the transmitter frequency and establish procedure for checking it regularly. The measurement of the transmitter frequency shall be made by means independent of the frequency control of the transmitter and shall be of sufficient accuracy to assure operation within the frequency band used.

In the absence of more elaborate frequency-measuring equipment, the receiver (with antenna disconnected) may be used to indicate the approximate transmitter frequency. Some idea of band limits can be obtained by listening to other amateur stations, noting where amateur activity stops at each end of the band.

If operation near a band edge is contemplated, however, it is necessary to calibrate the receiver dial precisely in terms of frequency if it is not already so calibrated. If the receiver is well made and has good inherent stability, a band-spread dial calibration can be relied on to within perhaps 0.2 per cent. Some manufactured models having factory calibration may be used to even closer limits. If the signal is too

WWV SCHEDULES

All U. S. frequency calibration is based on the standard frequency transmissions from the National Bureau of Standards standard frequency station WWV. It is on the air continuously, day and night, on a frequency of 5 Mc., modulated by a standard musical pitch of 440 cycles per second, corresponding to *A* above middle *C*. In addition there is a pulse every second, heard as a faint tick when listening to the 440 cycles. The pulse lasts 0.005 second, and provides an accurate time interval for purposes of physical measurements.

The 440-cycle tone is interrupted every five minutes for one minute to give the station announcement and provide an interval for checking of measurements. The announcement is the call letters (WWV) in telegraphic code.

The accuracy of the 5-Mc. frequency and of the 440-cycle standard pitch is better than a part in 10,000,000. The 1-minute, 4-minute, and 5-minute intervals marked by the beginning and ending of the announcement periods are accurate to a part in 10,000,000. The beginnings of the announcement periods mark accurately the hour and the successive 5-minute periods; this adjustment is within a small fraction of a second.

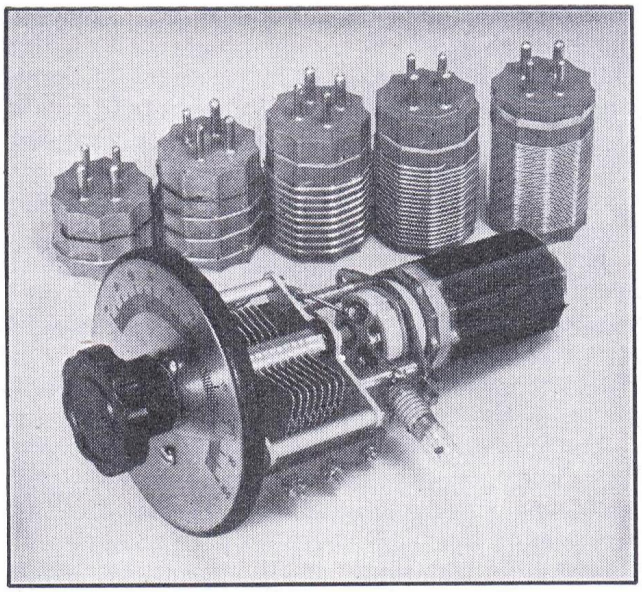

Fig. 1801 — Simple absorption frequency meter, with link-coupled flashlight bulb as resonance indicator. The dial plate is mounted on an insulating disc which also serves as a handle. Coil forms are cut down close to the windings to facilitate close coupling.

strong and blocks the receiver, the transmitter frequency may be checked by listening to the oscillator, with power amplifier turned off.

Absorption frequency meters — The simplest type of frequency meter consists of a coil and condenser, tunable over the frequency range desired (Fig. 1801–02). A frequency meter of this type, when tuned to the frequency of the transmitter and loosely coupled to the tank coil, will extract a small amount of energy from the tank. The energy thus extracted can be used to light a small flashlight lamp. Maximum current will flow in the lamp when the frequency meter is tuned exactly to the transmitter frequency, hence the brightness of the lamp indicates resonance. A more accurate indication may be obtained by substitution of a thermo-galvanometer or vacuum-tube voltmeter for the lamp. A crystal detector can also be used as the indicator (Fig. 1803–04).

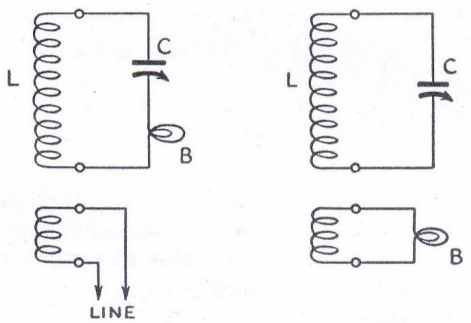

Fig. 1802 — The simple absorption frequency meter circuit at left is used chiefly in transmitter checking, with link line coupling to the circuit being checked. Circuit at right has bulb indicator loosely coupled to tuned circuit, giving sharper resonance point.

B — 1.4-volt 50-ma. dial light.
C — 150-$\mu\mu$fd. variable (Cardwell MR-150-BS).
L — Coils covering high-frequency spectrum with overlapping ranges, wound on 1½-inch dia. forms.

Freq. Range	*Wire Size*	*No. of Turns*	*Length of Winding*	*Link*[1]
1.1–3.5 Mc.	No. 28 e.	81¾	1⅞″	17 t.
2.5–8.0 Mc.	No. 24 t.	37¾	1⅝″	11 t.
4.5–14 Mc.	No. 20 t.	17¾	1½″	6 t.
7.5–25 Mc.	No. 16 t.	8¾	1¼″	4 t.
The above coils are available in commercial form, completely wound (Hammarlund SWK-4).				
22–70 Mc.	No. 16 t.	2¾	1″	2 t.
40–120 Mc.	No. 16 t.	¾	—	¾ t.

[1] Closewound, No. 30 d.s.c., ¼-inch from bottom end of primary winding.

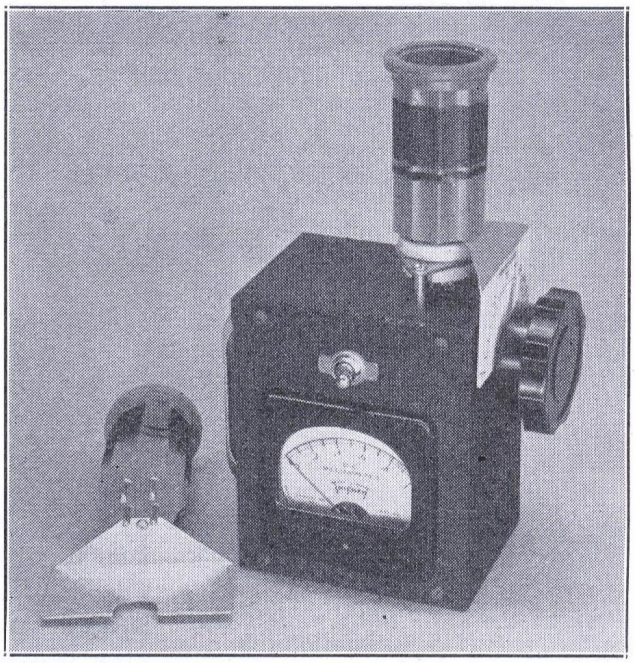

Fig. 1803 — A sensitive absorption frequency meter with a crystal detector rectifier and d.c. milliammeter indicating circuit. Individual calibration charts mounted directly on each coil form make the meter direct-reading. The toggle switch places a 10-ma. shunt across the 0–1 ma. meter; this range is used for preliminary readings, to avoid burning out meter or crystal. The meter gives satisfactory indications several feet from a low-power oscillator.

Although this type of frequency meter is not well adapted to precise measurement of frequency, it is useful for checking (1) the fundamental frequency of an oscillating circuit, (2) presence and order of amplitude of harmonics, (3) frequency of parasitic oscillations, (4) neutralization of an amplifier, (5) field strength on a qualitative basis, (6) presence of r.f. in undesired places such as power wiring, or any other application where detection of a small amount of r.f. and measurement of its frequency provides useful information.

Calibration of the absorption frequency meter is most easily accomplished with a receiver of the regenerative type to which the coil in the meter can be coupled. With the detector oscillating weakly, the frequency meter

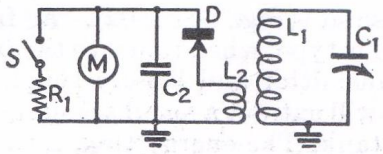

Fig. 1804 — Circuit diagram of the indicating frequency meter.
C_1 — 140-$\mu\mu$fd. variable (Hammarlund HFA-140-A).
C_2 — 0.001-μfd. mica.
D — Fixed crystal detector (Philmore).
L_1, L_2 — Same as in Fig. 1802*.
M — 0.1 d.c. milliammeter (Triplett Model 321).
R_1 — 3-ohm shunt; see general data on meter shunts.
S — S.p.s.t. toggle switch.
Crystal polarity must be determined by experiment; if meter reads backwards, reverse crystal connections.

* Since the impedance of individual crystal detectors varies, experiment with number of turns on L_2 is necessary for maximum current indication.

should be brought near the detector coil and tuned over its range until a setting is found which causes the detector to stop oscillating. The coupling between meter and receiver should then be loosened until the stoppage of oscillations occurs at only one spot on the meter tuning dial. The meter is then tuned to the frequency at which the receiver is set. If the receiver is set on several stations of known frequency, a number of points for a calibration curve can be obtained for each coil.

The same method may be used with a superheterodyne receiver, but it is necessary to remember that the oscillator frequency differs from the signal frequency by the intermediate frequency. For instance, if the receiver dial reads 6500 kc. and the receiver i.f. is 456, the oscillator frequency will be 6956 kc., which is the frequency which should be marked on the meter calibration scale. It is necessary to know whether the oscillator is on the high or low side of the incoming signal; in most receivers the high side is used throughout, but some receivers shift to the low side on the high-frequency ranges.

If the oscillator coils in the receiver are not accessible, the frequency meter may be capacity coupled through a few turns of insulated wire wrapped around the frequency-meter coil with one end of the wire placed near the stator plates of the oscillator condenser.

For transmitter frequency checking, a flashlight lamp or other indicator is not entirely necessary, since resonance will be indicated by a change in the plate current of the stage being checked as the meter is tuned through resonance. However, for locating parasitic oscillations, determining the relative amplitude of harmonics, checking neutralization, locating stray r.f. fields, etc., a sensitive indicator is indispensable.

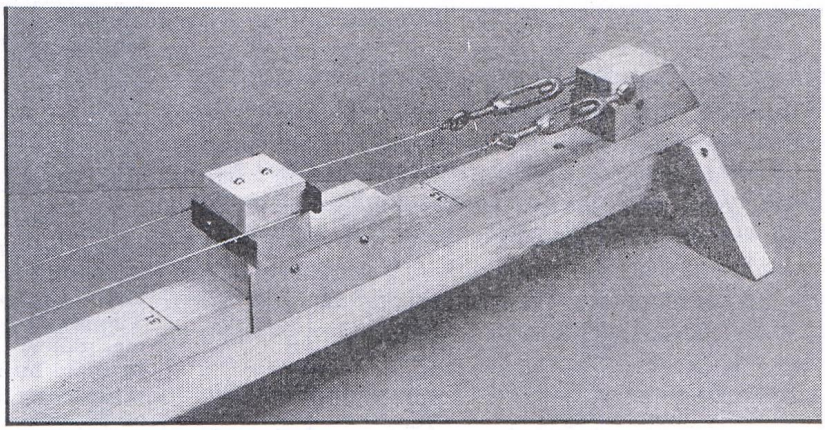

Fig. 1805 — One end of a typical Lecher wire system, showing turnbuckles for maintaining tension. The shorting bar is of brass with a sharp edge for better contact and precise indication; the slider keeps it at right angles to wire. A horizontal strip of bakelite at the back keeps the wires tight against the bar. A transparent celluloid centimeter rule is cemented to the front of the slider. The beam is marked off in decimeter (10 cm.) units. The sum of the reading of the slider and the lowest adjacent numeral on the beam gives the wavelength to the nearest millimeter.

The inherent errors in the absorption-type frequency meter ordinarily limit its useful accuracy to about 1%.

Lecher wires — At ultrahigh frequencies it is possible to determine frequency by actually measuring the length of the waves generated. The measurement is made by observing standing waves on a two-wire transmission line or Lecher-wire system. Such a line shows pronounced resonance effects, and it is possible to determine quite accurately the current loops (points of maximum current) as shown in Fig. 1806. The distance between two consecutive current loops is equal to one-half wavelength. Thus the wavelength can be read off directly in meters (inches x 39.37 if a yardstick is used) or centimeters for the very short wavelengths.

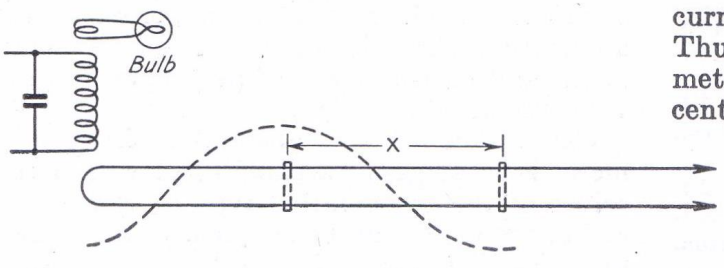

Fig. 1806 — Lecher wire system for measuring wavelength at u.h.f. Typical standing-wave distribution is shown, with positions of the shorting bar at current loops indicated. The distance "X" equals a half wavelength.

The line should be at least a wavelength long at the lowest frequency to be measured and entirely air-insulated except where it is supported at the ends. The wires may be stretched tightly between any two convenient supports, using a spacing of 1 to 1½ inches. The positions of the current loops are found by means of a "shorting bar" which is slid along the line to vary its effective length (Fig. 1805).

Resonance indications may be obtained in several ways. A convenient and fairly sensitive indicator can be made by soldering the ends of a one-turn loop of wire to a flashlight bulb, then coupling the loop to the tank coil until the bulb glows moderately brightly. A similar coupling loop should be connected to the ends of the Lecher wires and brought near the tank coil. Then the shorting bar should be slid along the wires outward from the transmitter until the lamp shows a sharp loss in brightness. This point should be marked and the shorting bar moved out until a second dip is obtained. The distance between the two points will be equal to half the wavelength. If the measurement is made in inches, the frequency will be

$$F_{Mc.} = \frac{5906}{\text{length (inches)}}$$

If the length is measured in meters

$$F_{Mc.} = \frac{150}{\text{length (meters)}}$$

In checking a superregenerative receiver, the Lecher wires may be similarly coupled to the receiver coil. As the bar is slid along the wires a spot will be found where the receiver goes out of oscillation. The distance between two such spots is equal to a half wavelength.

Lecher wire measurements may easily be made to an accuracy of 1% or better. If sufficient care is used, measurements accurate to 0.1% at 112 Mc. are possible, representing a linear distance of about 1 millimeter. This is accomplished by loosening the coupling for the final adjustment until indications are just discernible. It is helpful to use a highly sensitive indicator; the crystal-detector absorption frequency meter previously described will enable closer measurements when used as a resonance indicator than the flashlight bulb, for example.

Heterodyne frequency meters — For more accurate measurement of transmitter frequency, a heterodyne frequency meter should be used. This is a small oscillator with a precise frequency calibration covering the lowest frequency band used, completely shielded. It must be so designed and constructed that it can be accurately calibrated and will retain its calibration over long periods of time.

The signal from this oscillator (or a harmonic thereof) is fed into a receiver or simple detector together with the signal to be measured, and the two frequencies are heterodyned. When the frequency meter oscillator is tuned to zero beat with the signal, its frequency or the harmonic multiple is the same as the unknown.

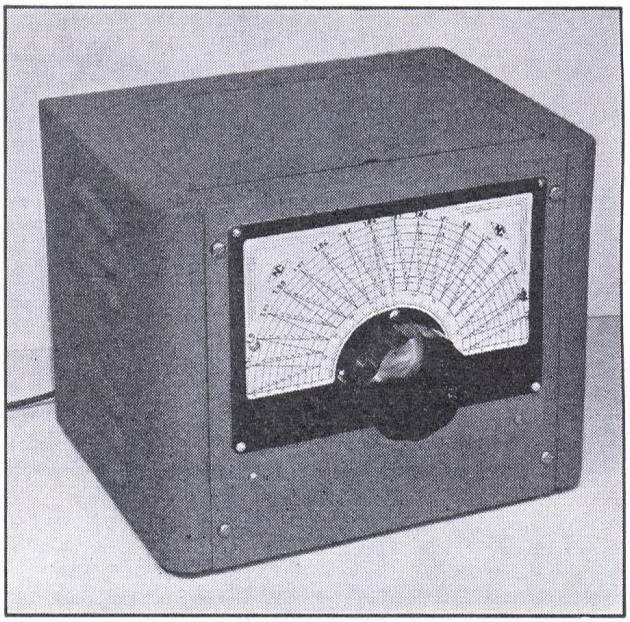

Fig. 1807 — An electron-coupled heterodyne frequency meter with harmonic amplifier and voltage regulator. The direct-reading dial has been calibrated for every 10-kc. point from 1750 to 1900 kc. Lines passing through these calibration points are intersected by ten sub-division lines. Diagonal lines connecting the ends of adjacent 10-kc. lines, in conjunction with the sub-divisions, enable reading the scale accurately to 1 kc. or better.

The oscillator used in the frequency meter must be very stable. Mechanical considerations are most important in its construction. No matter how good the instrument may be electrically, its accuracy cannot be depended upon if it is flimsily built. Inherent frequency stability can be improved by avoiding the use of phenolic compounds and plastics (bakelite, polystyrene, etc.) in the oscillator circuit, employing only high-grade ceramics for insulation. Plug-in coils or switches are not ordinarily used; instead, a solidly-built and firmly-mounted tuned circuit is permanently installed and the oscillator panel and chassis reinforced for rigidity.

To obtain high accuracy the frequency meter must have a dial that can be read precisely to at least one part in 500; ordinary dials such as are used for transmitters and inexpensive receivers are not capable of such precision without the addition of vernier scales. Select a dial which has fine lines for division marks, and which preferably has an indicator close to the dial scale so that the readings will not appear different because of parallax when the dial is viewed from different angles.

A stable oscillator circuit suitable for use in the frequency meter is the electron-coupled

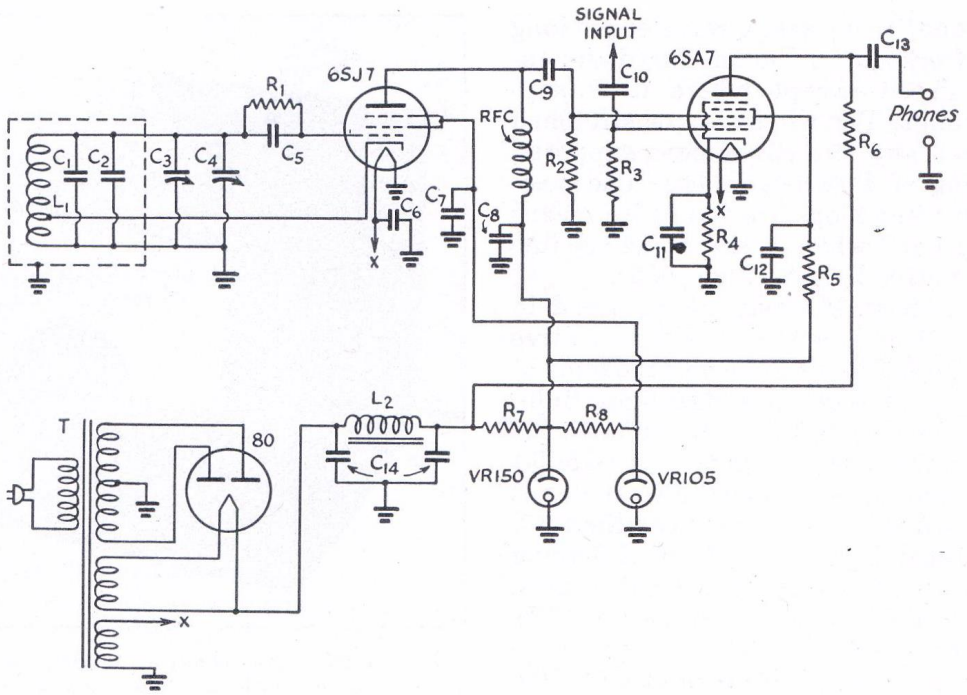

Fig. 1808 — E.c. frequency meter circuit diagram.

C_1 — 350-$\mu\mu$fd. zero temp. coefficient (Centralab 816Z).*
C_2 — 40-$\mu\mu$fd. negative temp. coefficient (Centralab 913N)*.
C_3 — 100-$\mu\mu$fd. midget (Hammarlund MC-100-S).
C_4 — 50-$\mu\mu$fd. trimmer (Hammarlund APC-50).
C_5 — 100-$\mu\mu$fd. silver-mica (C-D 5R-5T1).
C_6, C_8 — 0.005-μfd. mica.
C_7, C_9, C_{10} — 0.002-μfd. mica.
C_{11} — 25-μfd. 25-volt electrolytic.
C_{12} — 0.01-μfd. 400-volt paper.
C_{13} — 0.5-μfd. 400-volt paper.
C_{14} — Dual 8-μfd. 450-volt electrolytic.
R_1, R_2 — 1 megohm, ½-watt.
R_3 — 20,000 ohms, ½-watt.
R_4 — 150 ohms, ½-watt.
R_5 — 5000 ohms, 1-watt.
R_6 — 50,000 ohms, 2-watt.
R_7 — 3500-ohm 10-watt wirewound.
R_8 — 2500-ohm 5-watt wirewound.
L_1 — 60 turns No. 24 d.c.c. closewound on 1¼-in. dia. steatite form (National XR-16), cathode tap 17 turns from ground end.
L_2 — 10-henry 40-ma. filter choke (Thordarson T-13C27).
RFC — 65 turns No. 28 e. closewound on 9/16-in. dia. form.
T — 300-volt 50-ma. power transformer with 6.3-volt fil. winding (Thordarson T-70R20).

* C_1 and C_2 may be combined in one 400-$\mu\mu$fd. silver-mica condenser, if desired.

circuit (§ 4-2). The oscillation frequency is practically independent of moderate variations in supply voltages, provided the plate and screen voltages are properly proportioned. It is possible to take output from the plate with but negligible effect on the frequency of the oscillator. A third feature is that strong harmonics are generated in the plate circuit so that the meter is useful over a number of frequency bands. A typical electron-coupled frequency meter is shown in Figs. 1807–1809.

When the frequency meter is first turned on some little time is required for the tube to reach its final operating temperature; during this period the frequency of oscillation will drift slightly. Although the drift will not amount to more than two or three kilocycles on the 3500-kc. band and proportionate amounts on the other bands, it is desirable to allow the frequency meter to "warm up" for about a half hour before calibrating, or before making

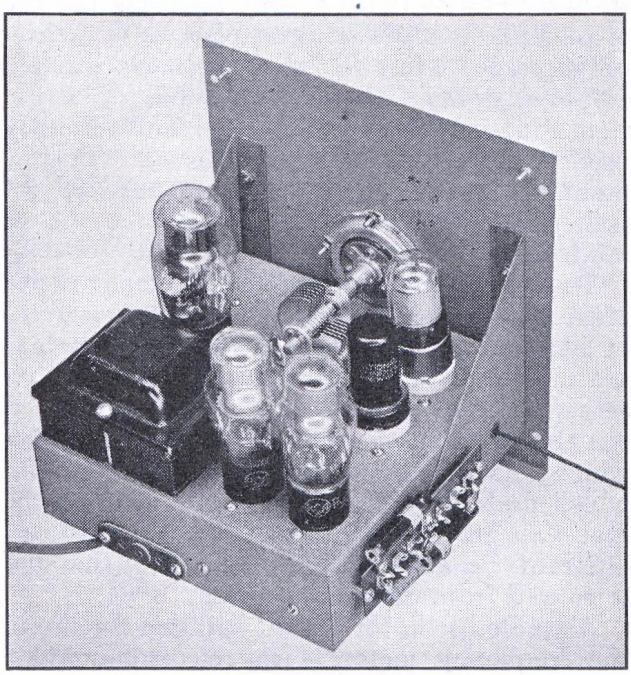

Fig. 1809 — Rear view of the electron-coupled heterodyne frequency meter. The 7 x 7 x 2-inch chassis is supported by two brackets for rigidity. It is raised sufficiently to accommodate the height of the coil shield underneath; this also enables mounting the tuning condenser directly on the chassis. The voltage-divider resistors are mounted on the side to keep heat away from the coil.

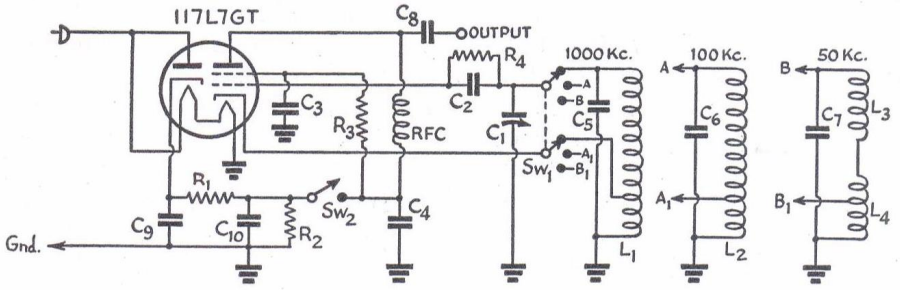

Fig. 1811 — Wiring diagram of the 50-, 100- and 1000-kc. frequency standard.

C_1 — 100-$\mu\mu$fd. midget variable (Hammarlund HF-100).
C_2 — 250-$\mu\mu$fd. mica.
C_3, C_4 — 0.02-μfd. 400-volt paper.
C_5 — 500-$\mu\mu$fd. mica.
C_6 — 0.001-μfd. mica.
C_7 — 0.002-μfd. mica.
C_8 — 50-$\mu\mu$fd. mica.
C_9, C_{10} — 8-μfd. 450-volt electrolytic.
R_1, R_2 — 50,000 ohms, 1-watt.
R_3, R_4 — 0.1 megohm, 1-watt.
RFC — 2.5-mh. r.f. choke.
S_1 — 3-position, 2-circuit switch (Mallory 3223J).
S_2 — S.p.s.t. toggle switch.
L_1 — 100 turns No. 34 d.c.c. close-wound on 9/16-inch form. Cathode tap at 30th turn from ground.
L_2 — 2.5-mh. r.f. choke. Cathode tap between first and second pie from ground.
L_3 — 2.5-mh. r.f. choke at right angles to L_4.
L_4 — 2.5-mh. r.f. choke. Cathode tap between second and third pie.

Note — Because of manufacturing tolerances in r.f. chokes and condensers, additional capacity may be required on the 50- and 100-kc. ranges. If C_1 does not tune to required frequency in calibration, add 100 $\mu\mu$fd. to C_6 or C_7 as required. If additional output is desired, decrease R_1 to 25,000 ohms. The single-wire power cord eliminates danger from shock with the grounded chassis connected to one side of line; the plug must be correctly inserted or the tube will not light. A ground connection is essential.

measurements in which the utmost accuracy is desired. Better still, the frequency meter can be left on permanently. The power consumption is negligible, and the long-time stability will be vastly improved.

Although some frequency drift is unavoidable, it can be minimized by the use of voltage regulator tubes in the power supply and low-drift silvered-mica or zero temperature-coefficient fixed condensers in the tuned circuit. A small negative temperature-coefficient capacity can be included to compensate for residual drift.

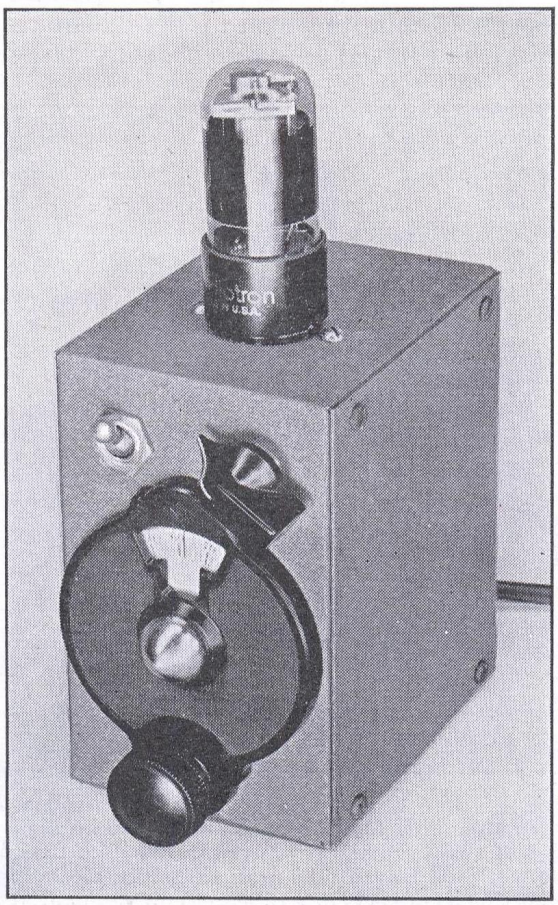

Fig. 1810 — A 50-, 100- and 1000-kc. electron-coupled frequency standard, using a dual-purpose 117L7GT tube that serves both as rectifier and oscillator, complete with transformerless power supply in a 3 x 4 x 5-in. metal box. The controls are: main tuning dial, power switch and frequency selector switch.

Calibration of the frequency meter is readily accomplished if a low-frequency standard (discussed later in this chapter) is available, the required calibration points being supplied by harmonics from the standard. The frequency meter is tuned to zero-beat with these harmonics, using either a built-in detector or the station receiver to combine the two signals to provide an audible beat. When a sufficient number of points have been established, they may be marked on graph paper and a calibration curve drawn. For maximum convenience, a direct-reading dial scale can be constructed.

If no frequency standard is available, calibration points may be obtained from other sources of known frequency, such as the transmitter crystal oscillator, harmonics of local broadcasting stations, or even checks by other amateurs on the air. As many such points as possible should be secured, so that inaccuracies will average out.

In use, the signal from the frequency meter can be fed into the receiver by connecting a wire from the plate of the oscillator through a very small capacity to the input of the receiver. The signal to be measured is then tuned in in the usual way and the frequency meter adjusted to zero-beat.

For convenience in checking the frequency of the transmitter or other local oscillators which generate sufficiently strong signals, it is desirable to incorporate a detector in the frequency meter which will combine the signals and deliver the audio beat-note output to headphones or a visual zero-beat indicator. A frequency converter tube such as the 6L7 or 6SA7 is especially suited for this purpose.

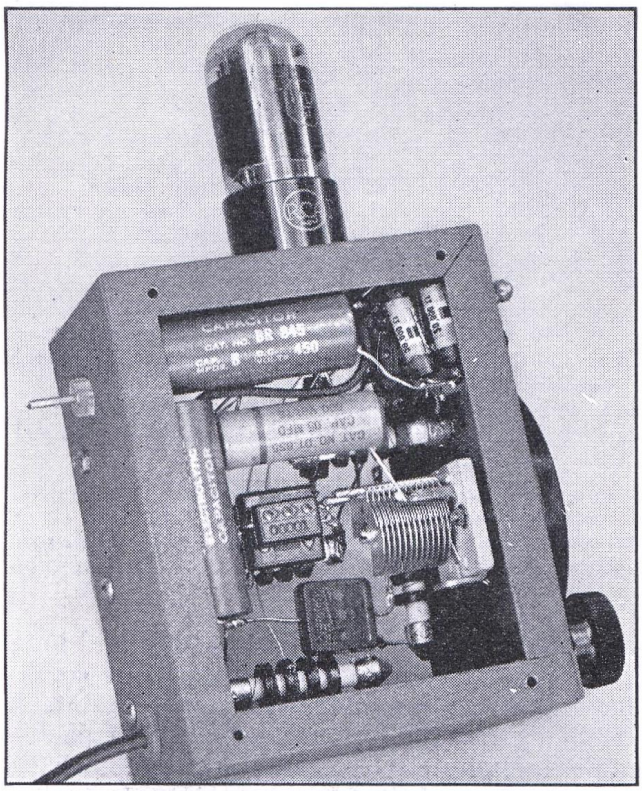

Fig. 1812 — Inside the e.c. frequency standard. Careful planning is necessary to get all parts in without crowding inductances. Fine wire is used for r.f. connections to minimize vibration effects. The polystyrene bushing at left is the output connection.

With a stable oscillator, a precision dial and frequent and careful calibration, an overall accuracy of 0.05 to 0.1% may be expected of the heterodyne frequency meter. The principal limiting factors are the precision with which the calibrated dial can be read and the "re-set" stability of the tuned circuit.

Frequency standards — To make more precise frequency measurements, particularly of amateur-band limits, a secondary frequency standard is required. This is a highly stable low-frequency oscillator, usually operated at 50 or 100 kc., the harmonics of which are used to provide reference points every 50 or 100 kc. throughout the spectrum. Since all amateur band edges fall at multiples of these frequencies, it is possible to establish band limits with extreme accuracy. A 1000-kc. frequency is often added to facilitate preliminary identification of frequency ranges, especially on u.h.f. Such units are shown in Figs. 1811–1815.

A standard of this type is inherently more accurate than a heterodyne frequency meter because (a) the low-frequency oscillator has better inherent stability and (b) the frequency setting once made is not thereafter changed, eliminating the re-set and calibration errors.

For highest accuracy in frequency measurement and calibration, the most suitable instrument for amateur work is a precision crystal-controlled secondary standard, provided with a multivibrator (§ 3-7) for frequency division (Figs. 1816–17). Such a standard can be constructed at reasonable cost, and will mark 10-kc. intervals throughout the communications spectrum. The frequency of a signal can then be checked by noting its location with respect to two adjacent 10-kc. points on the dial of a calibrated receiver or heterodyne frequency meter and estimating the exact frequency by interpolation.

Although ordinary amateur practice does not require greater accuracy than is possible with this method except at band edges, even more precise measurements can be made by the use of an interpolation oscillator. This is a calibrated audio oscillator used in the same manner as a heterodyne frequency meter; it is set at zero beat with the beat-note resulting from the combination of the unknown signal frequency with the nearest 10-kc. multivibrator harmonic. For example, if the "unknown" frequency is 3514 kc., it will produce a 4000-cycle beat with the 3510-kc. harmonic. When the audio oscillator is set at 4000 cycles it will zero-beat with this beat-note. Thus the frequency can be read direct from the dial of the a.f. oscillator to within a few cycles.

In the adjustment of the frequency standard at least a 15-minute warm-up period should be allowed. For initial adjustment, couple its out-

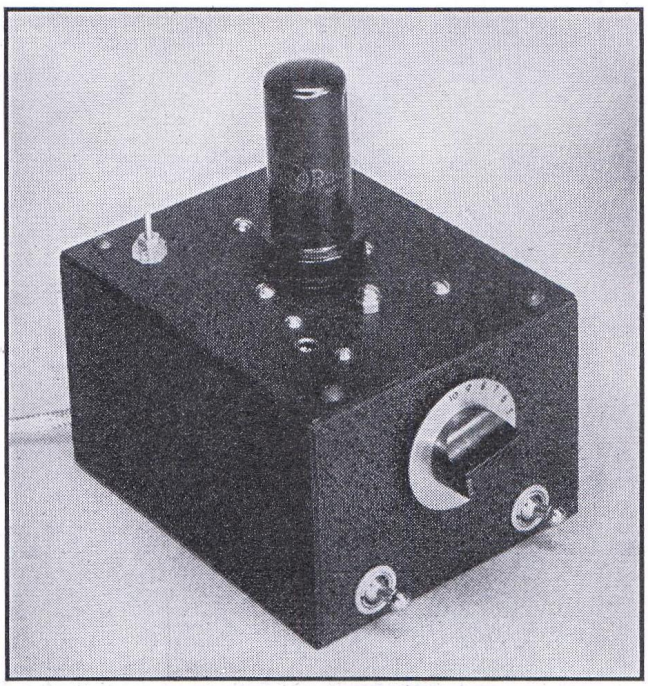

Fig. 1813 — A 100–1000-kc. crystal-controlled frequency standard. The special X-cut crystal oscillates at either of two frequencies, determined by its thickness (1000 kc.) and length (100 kc.). Either is selected by a switch which connects in a tuned circuit resonant at the desired frequency. A parallel trimmer across the crystal permits adjusting the frequency to precisely 100 kc. (provided natural crystal frequency is on the high side). No adjustment is possible on 1000 kc., the maximum error being about 0.05%. Output is taken through the insulated bushing at left rear.

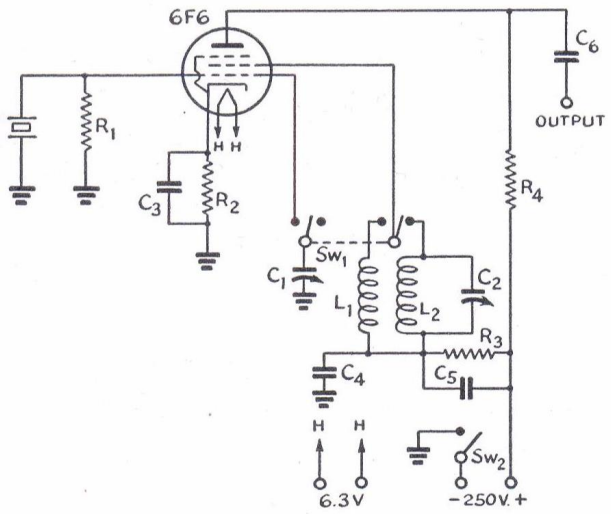

Fig. 1814 — Dual-frequency crystal standard circuit diagram.

C_1 — 35-$\mu\mu$fd. midget variable (Hammarlund HF-35).
C_2 — 100-$\mu\mu$fd. mica trimmer (Hammarlund CTS-85).
C_3, C_4, C_5 — 0.1-μfd. 400-volt paper.
C_6 — 0.001-μfd. midget mica.
R_1 — 5 megohms, ½-watt.
R_2 — 500 ohms, ½-watt.
R_3 — 25,000 ohms, 1-watt.
R_4 — 0.25 megohm, ½-watt.
L_1 — 8-mh. r.f. choke (Meissner 19-2078).
L_2 — 2.5-mh. r.f. choke (all but one pie removed).
S_1 — D.p.d.t. toggle switch.
S_2 — S.p.s.t. toggle switch.
Crystal — Bliley SMC-100.

put into a receiver tuned to the broadcast band and adjust the oscillator to zero beat with a broadcasting station operating on a multiple of 100 kc. (800 kc., 900 kc., 1000 kc., etc.) If the oscillator is self-excited, a second station 100-kc. away should be checked, to make sure the oscillator is working on 50 or 100 kc. rather than another frequency which gives an odd harmonic. Since broadcasting stations are required to stay within 20 cycles of assigned frequency, the maximum error of such a source will be less than 30 parts in one million.

For ultimate accuracy, however, the standard should be calibrated on the WWV standard frequency transmissions, which are accurate to better than 1 part in 10 million. These transmissions may be tuned in on a receiver operating on 5 Mc. (receiver beat oscillator off) and the standard adjusted until its harmonic is exactly at zero-beat with WWV. The calibration should be rechecked whenever precise measurements are to be made.

In adjustment of the multivibrator, two adjacent 100-kc. points are first noted on the dial of a calibrated receiver. The multivibrator is then turned on, and its frequency control (R_8 in Fig. 1817) set at half scale. Count the number

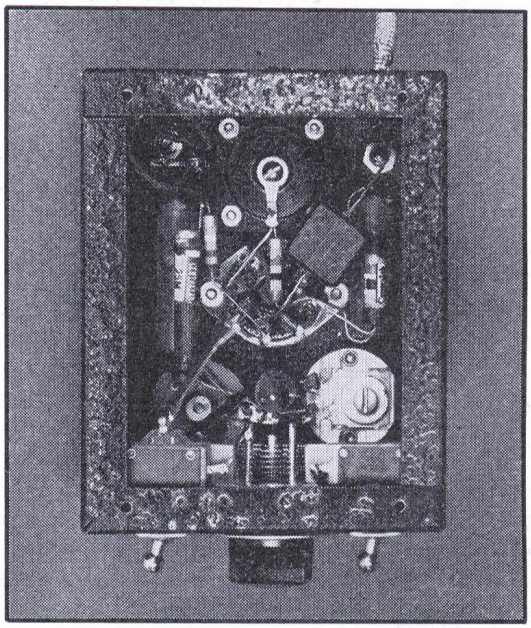

Fig. 1815 — Interior of the 100–1000 kc. standard. The crystal is mounted at top center, above the socket. (If crystal does not oscillate on 1000 kc. when mounted in horizontal position, try other positions.) Trimmer for 1000-kc. plate circuit can be seen at lower right, next to crystal trimmer; 8-mh. choke for 100-kc. is at left. The 1000-kc. inductance is mounted vertically in center.

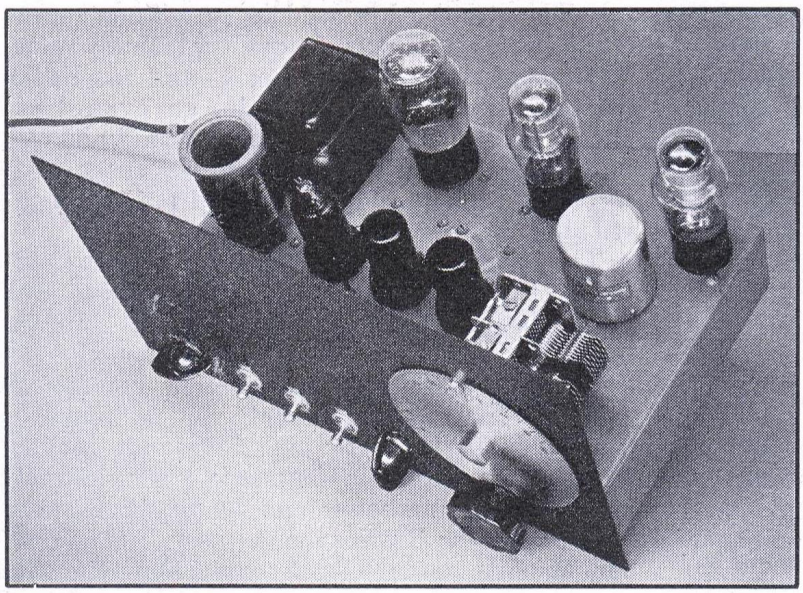

Fig. 1816 — Secondary frequency standard, incorporating a 100-kc. low-drift crystal oscillator, 10-kc. multivibrator and harmonic amplifier-modulator. The vernier dial is used for precise setting of crystal frequency. Controls along the bottom are, left to right: output tuning, C_{14}; on-off switch, S_1; "B" switch, S_2; multivibrator switch, S_3; and multivibrator control, R_8. Power transformer, rectifier and regulator tubes are along the rear edge of the 7 × 12 inch chassis. The crystal oscillator is at the right, multivibrator tube in the center, and output circuit at the left. The output circuit is tuned to the band in use, with output taken either through C_{17} or a link winding. The crystal frequency can be adjusted to precisely 100 kc. by the vernier dial and C_1. Switching the multivibrator on or off causes a frequency change of less than 1 part in a million.

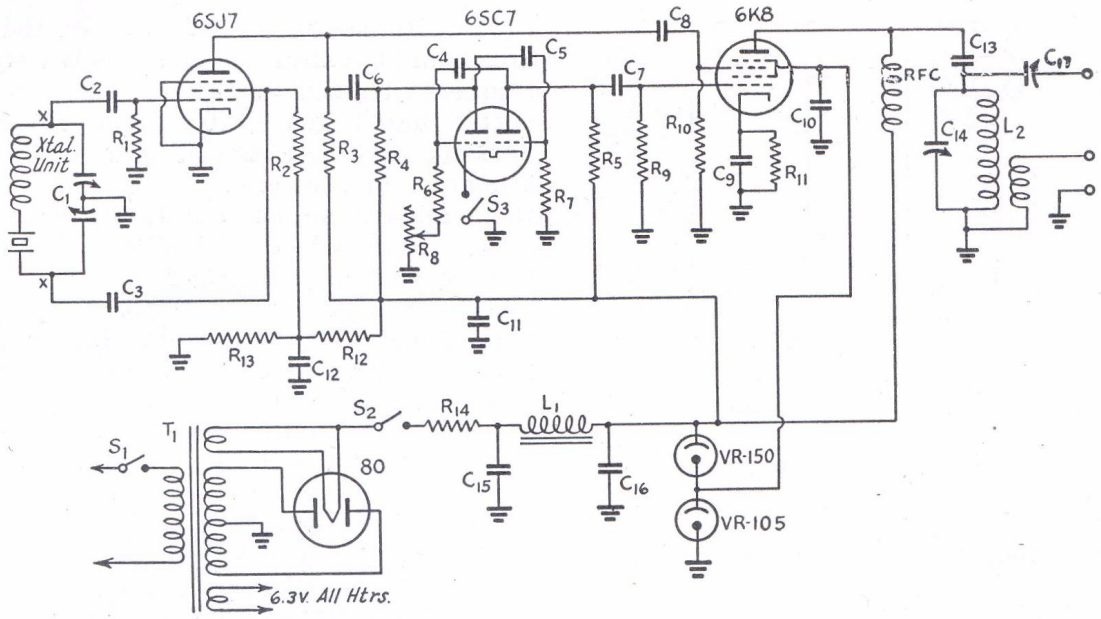

Fig. 1817 — Circuit diagram of the precision 100-kc. frequency standard.

C_1 — Dual 365-$\mu\mu$fd. variable, compact broadcast type (Meissner 21-5214).
C_2, C_3 — 0.01-μfd. 400-volt paper.
C_4, C_5 — 0.001-μfd. midget mica.
C_6, C_7 — 10-$\mu\mu$fd. midget mica.
C_8 — 50-$\mu\mu$fd. midget mica.
C_9, C_{10}, C_{11}, C_{12} — 0.1-μfd. 400-volt paper.
C_{13} — 0.002-μfd. midget mica.
C_{14} — 140-$\mu\mu$fd. variable (Hammarlund HF-140).
C_{15}, C_{16} — 8-μfd. 450-volt electrolytic.
C_{17} — 30-$\mu\mu$fd. trimmer (National M-30).
R_1 — 1 megohm, ½-watt.
R_2, R_3 — 0.5 megohm, 1-watt.
R_4, R_5 — 50,000 ohms, 1-watt.
R_6, R_7 — 20,000 ohms, ½-watt.
R_8 — 15,000-ohm potentiometer.
R_9 — 0.3 megohm, ½-watt.
R_{10} — 0.1 megohm, ½-watt.
R_{11} — 800 ohms, ½-watt.
R_{12} — 25,000 ohms, 1-watt.
R_{13} — 50,000 ohms, 1-watt.
R_{14} — 1500 ohms, 10-watt.
RFC — 2.5 mh. r.f. choke.
S_1, S_2, S_3 — S.p.s.t. toggle.
T_1 — Power transformer, 250 v. d.c. at 40 ma. (Thordarson T-13R11).
L_1 — 7-henry, 40-ma. filter choke (Thordarson T-13C26).

L_2 — 550–1200 kc. — 130 turns No. 30 enameled.
1200–3300 kc. — 70 turns No. 22 enameled.
7500–3300 kc. — 22 turns No. 22 enameled, length 1 inch.
15–6.8 Mc. — 11 turns No. 22 enameled, length 1 inch.
32–13.5 Mc. — 5 turns No. 22 enameled, length 1 inch.
56 Mc. — 2 or 3 spaced turns on 1-inch form, or air wound. Adjust for optimum output.
All except 56-Mc. coil wound on 1½-inch forms.
Output links may be adjusted to give desired signal strength in receiver.

The crystal is a Bliley SOC-100 (oscillator coil in same mounting).
For checking 1000-kc. points, a 150 microhenry coil (No. 30 d.c.c. on 1½-inch form) may be substituted for the crystal unit, connected between points X–X in the diagram. With C_1 near maximum, circuit will tune to 1000 kc.

of separate audio beats *between* the two marked 100 kc. points. If it is a number other than nine (indicating 10 kc. intervals), readjust R_8 until nine beats are observed. Mark this point. Note also the points on the R_8 scale where 8 and 10 beats occur, indicating approximately 11 and 9 kc. separation. The odd frequencies are occasionally useful in checking frequencies very close to the 10-kc. harmonics where the low beat-frequency makes it difficult to secure zero-beat, particularly when an interpolation oscillator is used. Mathematical calculation is required to determine the exact frequency.

Frequency measurement methods — Fig. 1818 shows four representative combinations of frequency-measuring equipment as used in amateur stations. The frequency meter (with built-in detector) used alone as at (1) is the simplest arrangement for checking the frequency of local oscillators. Substituting the station receiver for the built-in detector as at (2) will enable measurement of incoming received signals, as well.

For more precise determination of band edges, a 100-kc. standard may be used in conjunction with the heterodyne frequency meter as at (3), with or without a 10-kc. multivibrator. The standard is used to provide accurate check points on the frequency meter scale. With sufficient band-spread and a linear (straight-line-frequency) scale, an overall accuracy of 0.01% (100 parts in a million) can be attained. Alternatively, of course, the station receiver if adequately calibrated may be substituted for the frequency meter.

The arrangement of (4) gives maximum precision in measuring exact frequencies. The interpolation audio oscillator should have a linear frequency scale from 0 to 5000 cycles (as opposed to the logarithmic scale commonly used in laboratory oscillators). A beat-frequency oscillator with high-frequency oscillators and a straight-line-capacity variable-oscillator tuning condenser can be made to have such a scale. Resistance-capacity oscillators can also be made with linear scales. By this

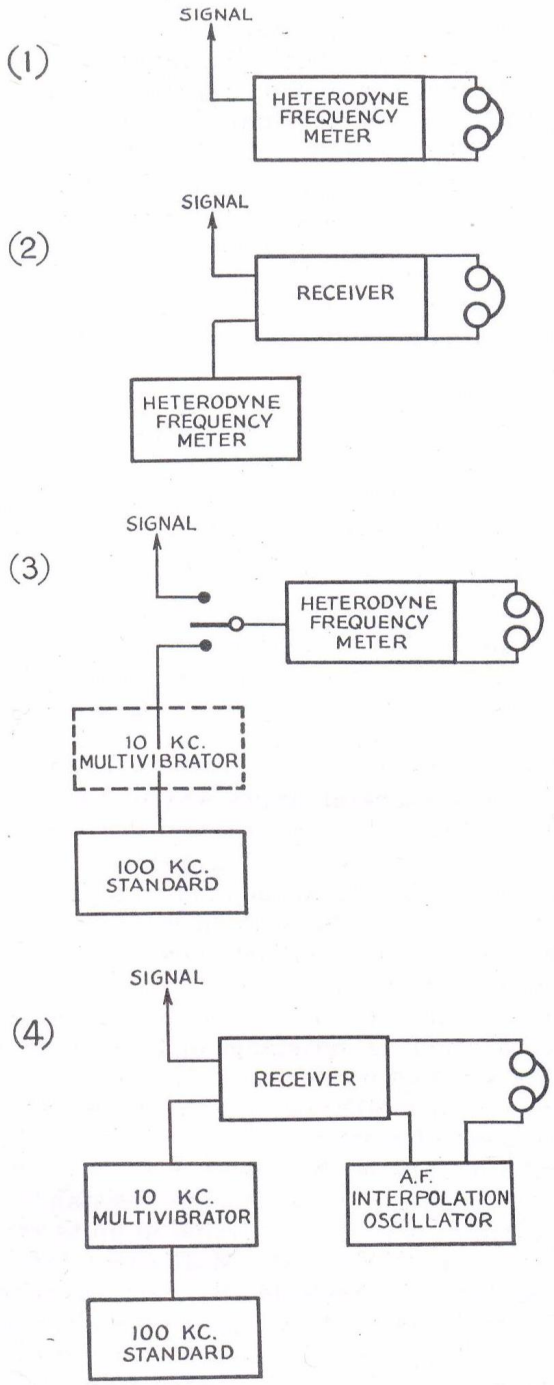

Fig. 1818 — Frequency measurement methods.

method, ARRL Official Observers measure frequencies to better than 10 parts in a million.

In addition to the headphones shown as zero-beat indicators in the diagram, some form of auxiliary visual zero-beat indicator is desirable. This can be a rectifier-type a.f. voltmeter with copper-oxide or diode rectifier, a neon tube "flasher," or a "magic eye" tube (§ 7-13) with its triode connected as an amplifier. The headphones are required for preliminary adjustments since the visual indicator usually responds only to frequencies under about 25 cycles.

Measurement of audio frequencies is best accomplished by the use of a cathode-ray oscilloscope, comparing the oscillator frequency with a known source such as 60-cycle a.c. by means of Lissajou's figures (§ 3-9). Where this is not possible, the audio frequency can be converted to sound and measured by aural comparison with a properly-tuned piano, remembering that middle C is 256 cycles and

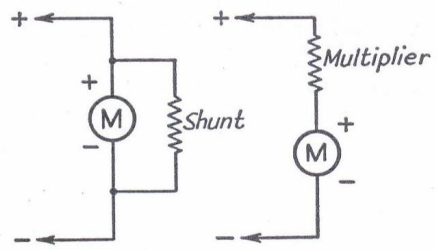

Fig. 1819 — How voltmeter multipliers and milliammeter shunts are connected.

each octave above or below doubles or halves the frequency. Intermediate points can be obtained by multiplying each successive half-note above C in any octave by 1.05946 (e.g., if C is 1, C# equals 1.05946, D equals 1.1225, etc.).

• MEASUREMENT OF CURRENT, VOLTAGE AND POWER

D.c. instruments—Instruments for measuring direct current are based on the d'Arsonval moving-coil principle, comprising an indicating pointer moving across a calibrated scale, actuated by the flow of current through a coil located in a constant magnetic field.

Ammeters and voltmeters are basically identical instruments, the difference being in the method of connection. An ammeter is con-

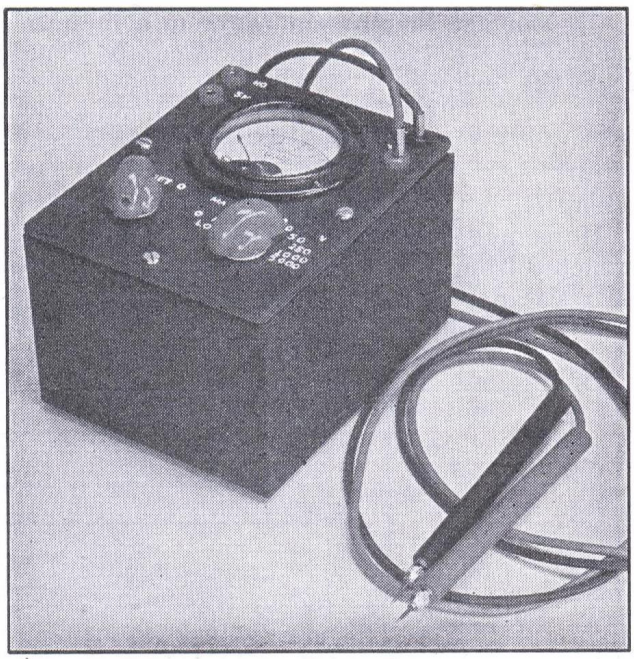

Fig. 1820 — An inexpensive multi-range volt-ohm-milliammeter housed in a standard 3x4x5-in. metal box. A bakelite panel is used. Ranges are marked with number dies, the impressions being filled with white ink.

nected in series with the circuit and measures the current flow. A voltmeter is a milliammeter (ammeter reading one-thousandth of an ampere) which measures the current through a high resistance connected across the source to be measured; its calibration is in terms of voltage drop in the resistance, or *multiplier*.

The ranges of both voltmeters and ammeters can be extended by the use of external resistors, connected in series with the instrument in the case of a voltmeter or in shunt in the case of an ammeter. Fig. 1819 shows at (A) the manner in which a shunt is connected to extend the range of an ammeter and at (B) the connection of a voltmeter multiplier.

To calculate the value of a shunt or multiplier, it is necessary to know the resistance of the meter. If it is desired to extend the range of a voltmeter, the value of resistance which must be added in series is given by the formula:

$$R = R_m (n - 1)$$

where R is the multiplier resistance, R_m the resistance of the voltmeter, and n the scale multiplication factor. For example, if the range of a 10-volt meter is to be extended to 1000 volts, n is equal to 1000/10 or 100.

If a milliammeter is to be used as a voltmeter, the value of series resistance can be found by Ohm's law (§ 2-6)

$$R = \frac{1000\ E}{I}$$

where E is the desired full-scale voltage and I the full-scale current reading of the instrument in milliamperes.

To increase the current range of a milliammeter, the resistance of the shunt can be found from the formula:

$$R = \frac{R_m}{n - 1}$$

where R_m is the meter resistance as before.

Homemade milliammeter shunts can be constructed from any of the various special kinds of resistance wire, or from ordinary copper magnet wire if no resistance wire is available. The Copper Wire Table in Chapter 20 gives the resistance per 1000 feet of the various sizes of copper wire. After computing the resistance required, determine the smallest wire size that will carry the full-scale current (at 250 circular mils per ampere). Measure off enough wire (pulled tight but not stretched) to provide the required resistance. Accuracy can be checked by causing a current to flow through the meter making it read full-scale without the shunt; connecting the shunt should then give the correct reading based on the new full-scale range.

Precision wire-wound resistors used as voltmeter multipliers cannot readily be made by the amateur, because of the much higher resistance required (as high as several megohms). As a substitute, standard metallized fixed resistors can be used for economy. High-voltage multipliers should be made up of several resistors in series; this not only increases the total voltage breakdown but tends to average out errors in the individual resistors due to manufacturing tolerances.

A portable combination milliammeter-voltmeter having several ranges is extremely useful for experimental purposes and for trouble-shooting in receivers and transmitters. As a voltmeter such an instrument should have high resistance so that very little current will be drawn in making voltage measurements. A low-resistance voltmeter will give inaccurate readings when connected across a high-resistance circuit. A resistance of 1000 ohms per volt is satisfactory for most uses; a 0-1 milliammeter or 0-500 microammeter (0-0.5 ma.) is the basis of most multi-range meters of this type. Microammeters having a sensitivity of 0-50 μa., giving a voltmeter resistance of 20,000 ohms per volt, are found in units available at reasonable cost. Multipliers for the various ranges are selected by a rotary switch.

The various current ranges on a multi-range instrument are also obtained by using a number of shunts individually switched in parallel with the meter. Particular care should be taken to minimize contact resistance.

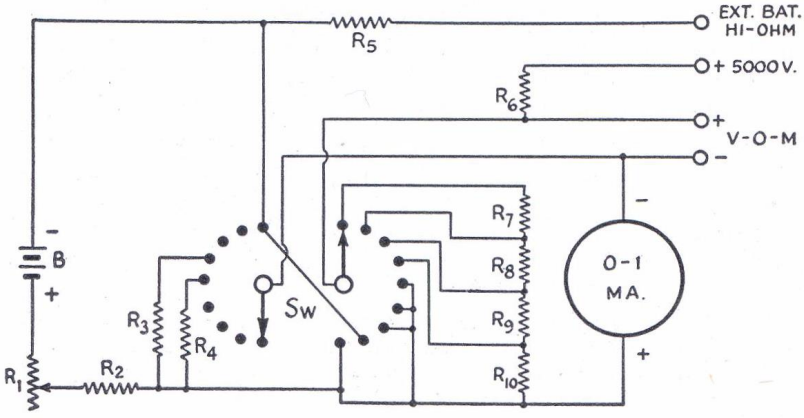

Fig. 1821 — Circuit of low-cost V-O-M.
R_1 — 2000-ohm wire-wound variable.
R_2 — 3000 ohms, ½-watt.
R_3 — 100-ma. shunt, 0.33 ohms (see text).
R_4 — 10-ma. shunt, 3.6 ohms (see text).
R_5 — 40,000 ohms, ½-watt.
R_6 — 4 megohms, 4-watt (four 1-megohm 1-watt resistors in series).
R_7 — 0.75 megohm, 1-watt (0.5 megohm and 0.25 megohm ½-watt in series).
R_8 — 0.2 megohm, ½-watt.
R_9 — 40,000 ohms, ½-watt.
R_{10} — 10,000 ohms, ½-watt.
SW — 9-point 2-pole switch (Mallory-Yaxley 3109).
B — 4.5 volts (Burgess 5360).

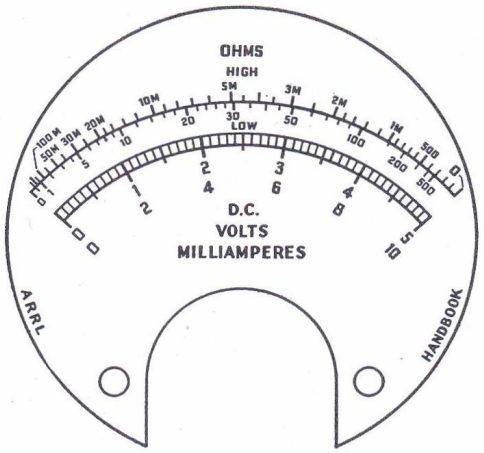

Fig. 1822 — Instrument scale for the inexpensive volt-ohm-milliammeter. It can be cut out and pasted over the existing scale of a Triplett No. 221 0–1 ma. milliammeter or any equivalent 2-inch meter having 33 ohms internal resistance. Calibration should be checked with a standard of moderate accuracy after assembly, to allow for variations in individual meters, inaccuracies in multipliers, resistance of test leads, paper shrinkage, etc.

When d.c. voltage and current are accurately known, the power can be stated by simple application of Ohm's law: $P = EI$ (§ 2-6). Thus the voltmeter and ammeter are also the instruments used in measuring d.c. power.

A.c. instruments — D.c. meters will not function on alternating current, and it is therefore necessary either to rectify the a.c. and measure the resulting d.c. or use special instruments that will indicate on a.c.

A.c. ammeters and voltmeters utilize the moving iron-vane principle. Since the maximum sensitivity is 15 to 25 ma., making the ohms-per-volt 40 to 67, iron-vane voltmeters consume substantial power. Thus they are suitable for measuring filament and line voltages, but cannot be used in circuits which are unable to sustain a measuring load. Moving iron-vane meters are not accurate above a few hundred cycles.

For measurements where iron-vane meters are not suitable, special devices enabling the use of d.c. movements are employed. The most common of these for the power and audio frequency range is the full-wave copper-oxide rectifier, which converts a low-resistance 0-1 d.c. milliammeter into a high-resistance 0-0.909 a.c. milliammeter, making possible the construction of a.c. voltmeters having a sensitivity of 1000 ohms per volt and an accuracy of about 5%. The design of multipliers for such a voltmeter must allow for the fact that the rectifier resistance varies with current. Two scales are usually provided, one for use above 50 volts and one below. The frequency error is approximately 0.5% per 1000 cycles.

A.c. power measurements are more complex than for d.c., the simple multiplication of current and voltage being in error unless the load is purely resistive. If the current and a.c. impedance are known, the power is I^2Z. For ordinary amateur power calculations, such as the input to a power transformer, the product of a.c. voltage and current can be considered sufficiently accurate.

R.f. instruments — The measurement of very high-frequency a.c. or r.f. quantities involves special problems. Practical instruments read in terms of d.c. from a conversion device.

R.f. current is usually measured by means of a thermoammeter. This is a sensitive d.c. microammeter connected to a thermocouple associated with a heater made of a short piece of resistance wire. Thermoammeters have been made with a sensitivity of 1 ma., but the ranges used by amateurs for measuring antenna current, etc., are from 0-0.5 amperes up.

The most suitable r.f. voltmeter is a peak-reading vacuum-tube voltmeter (Fig. 1823). When properly designed, its accuracy is limited at r.f. only by the variation of the input resistance with frequency. The peak diode voltmeter has little error even at 60 Mc. The same is true of the self-biased and slide-back types if tubes having low input capacity are used. The oscilloscope can also be used as an r.f. voltmeter for potentials of several volts or more.

R.f. power measurements can be made by measuring the current through a resistor or reactance of known value. Approximate power measurements may be made by using ordinary 115-volt light bulbs as a substitution or "dummy" load, connected either singly or in series-parallel to provide the required resistance and power rating. The approximate resistance of the bulb can be computed from its wattage rating at 60 cycles. Special non-inductive resistance units, enclosed in vacuum bulbs mounted on standard tube bases, with resistances of 73 and 600 ohms at power ratings up to 100 watts, are available for this purpose. For higher power the units may be connected in series-parallel (§ 4-9).

Where the substitution load method is impractical, r.f. power can be measured by multiplying the current through a thermoammeter in the circuit by the r.f. voltage across the circuit as indicated by an r.m.s. meter (or 70.7% of the reading on a peak voltmeter).

Another method of measuring r.f. power is the photometric method. A calibrated light-sensitive cell (a photographer's exposure meter is suitable) is used to measure the relative brilliance of an electric light bulb as a substitution load and its normal brilliance on 115-volt 60-cycle supply.

Vacuum-tube voltmeters — The most useful instrument for the measurement of both d.c. and a.c. voltages is the vacuum-tube voltmeter. Its chief advantages are (a) negligible power taken from the circuit under measure-

ment and (b) accuracy over a wide frequency range including r.f.

The v.t.v.m. operates by virtue of the change in plate current caused by a change in grid voltage. In the case of a d.c. v.t.v.m., the d.c. voltage represents simply a change in grid bias. In the case of a.c., the tube acts as a rectifier and the measurement is in terms of rectified d.c.

Representative vacuum-tube voltmeter circuits are shown in Fig. 1823. The simple diode rectifier (A) can be almost any vacuum tube; in a triode or multi-grid type, all electrodes except the control grid are connected to cathode (or negative filament). A Type 30 or 1G4G tube with a flashlight cell for filament supply makes a convenient portable unit. A tube with low input capacity (1N5G, 6T7G, 954) should be used for high frequencies. The frequency range is limited by the tube input capacity shunting the load resistance. Calibration is linear above 2 or 3 volts provided the load resistance exceeds 0.1 megohm. The meter *M* should be a sensitive microammeter (0-100 or 200 μa.); a 0-1 ma. meter can be used with reduced sensitivity.

The peak diode voltmeter at (B), shunt-connected to eliminate the need for a d.c. return in the measured circuit, reads peak a.c. voltage. The input resistance is comparable to that of the simple diode for equivalent sensitivity, but the high-frequency error is less. The time constant of the *RC* circuit should be at least 100 for the lowest frequency to be measured (*RCF*>*100*). Typical values are 0.5 megohm and 0.5 μfd. for audio, and 0.1 megohm and 0.05 μfd. (mica) for r.f. and i.f.

The grid rectification circuit shown at (C) can be considered equivalent to the diode rectifier of (B) followed by a zero-bias triode amplifier. The sensitivity is greatly increased over the ordinary diode. The input resistance is low with small inputs (0.1 to 1.0 megohm) because of grid current. The plate current is at maximum when idling and decreases with signal. This circuit is useful chiefly because it can be used with inexpensive meters. The instrument can be calibrated from a known 60-cycle source; the scale is square-law for small signals, becoming linear with increasing input. The value of *R* is non-critical. *C* should have a reactance small compared with *R* at the operating frequency, i.e., 0.01 μfd. mica from 1 kc. up, 0.1 μfd. paper for low a.f. For d.c. *C* is, of course, omitted. A high-μ tube is preferable, to reduce the idling or no-signal plate current.

The self-biased plate-rectification or reflex voltmeter at (D) has a very high input resistance and fair sensitivity. It is normally connected directly across the circuit to be measured; if no d.c. return is available, a coupling circuit must be added as shown in the dotted lines (*C* — 0.01 μfd, *R* — 10 megohms or more). A low-μ tube is preferable, to minimize contact potential and grid current. The cathode resistance R_c controls sensitivity; the higher it is the more nearly linear and stable will be the calibration. A range switch can be provided, connecting in various values of cathode resistance from 2000 ohms to 0.5 megohm to give full-scale ranges from about 2.5 to 250 volts. The plate and cathode bypasses may be 0.001-μfd mica condensers, the cathode being shunted by a 10-μfd. electrolytic

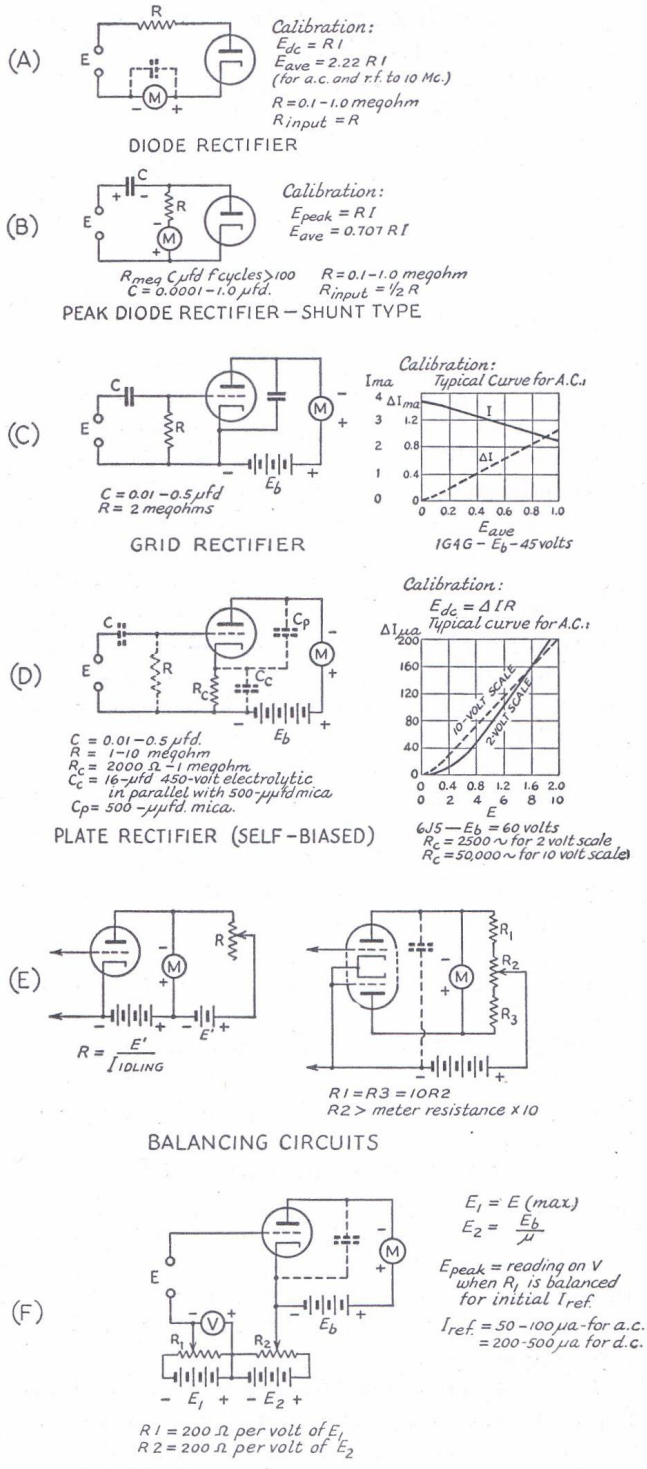

Fig. 1823 **— Vacuum-tube voltmeter circuits.**

for 60-cycle calibration and low a.f. measurements.

The no-signal plate current present in the circuits of (C) and (D) can be balanced out by bridge or bucking circuits, typical forms of which are shown at (E). An auxiliary battery (or section of the voltage divider, in an a.c. power supply) is connected back to the meter through a variable resistor, providing a controllable opposite current flow which can be made to equal exactly the residual plate current of the tube. When used with (C), this balance circuit allows the meter terminals to be reversed, thereby making it read forward instead of backward with signal. The resistor R should be not less than ten times the internal resistance of the meter.

At the right in (E) an automatic balancing circuit is shown wherein a duplicate triode (usually the second section of a twin triode) takes the place of the adjustable resistor R. Current flow through R_1 and R_2 being equal and opposite with no signal, there is no potential across the meter and consequently no current flow. When a voltage is placed on the grid of the voltmeter triode this balance is disturbed, however, and the meter registers current flow. A small zero-setting resistor, R_3, is provided to correct for any discrepancies in tubes or resistors. The values of R_1 and R_2 will depend on the plate supply voltage available; the higher they are, the better the sensitivity and stability. The minimum value is several times the meter resistance.

The "slide-back" voltmeter at (F) is a comparison instrument in which the peak value of an a.c. or r.f. voltage is read in terms of a d.c. substitution voltage; the voltmeter tube and milliammeter, M, merely indicate when the two are equal. With the input terminals shorted and R_1 set so that V reads zero, the tube is biased nearly to cut-off by adjustment of R_2. The residual plate current is the reference current ($I_{ref.}$) or "false zero." If an a.c. voltage, E, is now applied across the input terminals, plate rectification of the positive peaks will cause the plate current to rise. By adjusting R_1, additional bias voltage may be introduced to balance out the a.c. voltage. The additional bias required to bring the plate current back to the reference value ($I_{ref.}$) is equal to the peak value of the signal being measured. In operation R_1 should be set (after setting $I_{ref.}$) so that all of E_1 is in the circuit, to avoid burning out the milliammeter when the signal is applied. After the unknown voltage has been connected the bias is reduced by R_1 until the reference current is reached. The slide-back voltmeter is capable of high accuracy and has the advantage of requiring no a.c. calibration; it is therefore particularly useful for a temporary set-up.

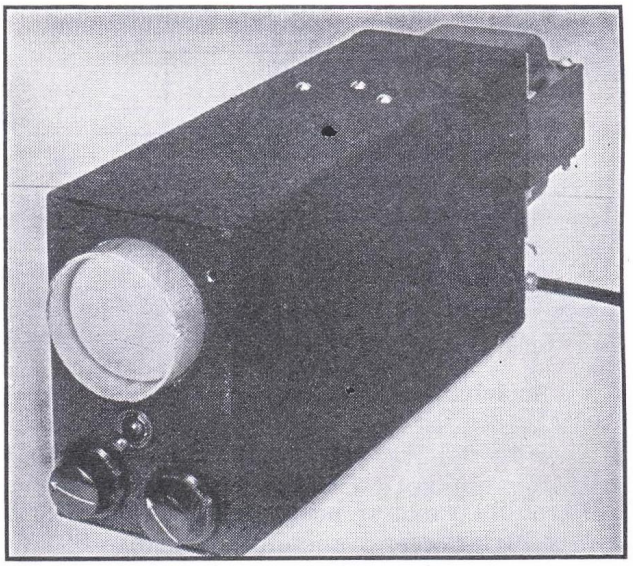

Fig. 1824 — Oscilloscope using 902 2-inch tube, housed in a 5 x 10 x 3-in. chassis with bottom plate. Two small feed-through insulators serve as terminals for external horizontal- and vertical-sweep connection. Note the location of the power transformer not only outside the steel shield chassis but also directly behind the cathode-ray tube, with the axis of the transformer winding along the axis line of the tube.

Oscilloscopes — Perhaps the most useful of all measuring devices is the cathode-ray oscilloscope. Although relatively expensive, its applications are so numerous that it can replace a number of other less satisfactory types of measuring equipment. It can be used on d.c., a.c. and r.f., and is particularly suited to a.f. and r.f. measurements because of the high input resistance and small frequency error.

The oscilloscope is in effect a complex voltmeter capable of measuring any two voltages simultaneously by the deflection of a weightless electron-beam pointer. Moreover, because this pointer projects its indication on a retentive luminous screen, the measurements include the additional factor of time. It is possible therefore to see the actual form of one or more repetitive cycles of an a.c. voltage by means of the oscilloscope, and to measure thereby not only its amplitude but also its frequency and waveform (§ 3-9).

A simple cathode-ray oscilloscope is shown in Figs. 1824–25. A 902, an inexpensive 2-in. cathode-ray tube, is used, mounted with the associated rectifier in a cabinet made of a standard 3 x 5 x 10-in. steel chassis with bottom plate. The shielding provided by this box is highly desirable for prevention of stray-field interference in the patterns obtained.

In building the unit the cathode-ray tube must be placed so that the alternating magnetic field from the transformer has no effect on the electron beam. The transformer should be mounted directly behind the base of the tube with the axes of transformer winding and tube common.

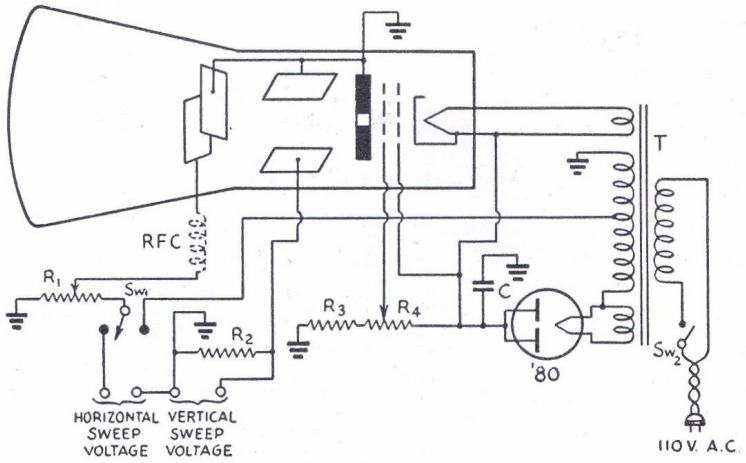

Fig. 1825 — Circuit of the simple 2-inch oscilloscope.

C — 2-μfd., 900-volt working electrolytic (dual 4-μfd. 450-volt with sections series-connected).
R_1 — 100,000-ohm potentiometer.
R_2 — 50,000 ohms, 1-watt.
R_3 — 200,000 ohms, 2-watt.
R_4 — 100,000-ohm potentiometer (with switch).
RFC — 2.5-mh. 125-ma. r.f. choke (optional; for correcting leaning patterns due to r.f. coupling).
SW_1 — S.p.d.t. toggle switch, 250-volt 1-amp.
SW_2 — S.p.s.t. switch (on R_4).
T — Receiver-type power transformer delivering 325-0-325 v. a.c. at 40 ma., 5 volts at 3 amp., 6.3 volts at 2 amp. (Thordarson T-13R11).

If trouble is experienced in getting a pattern from a high-power transmitter because of r.f. voltage on the 115-volt supply line, two blocking condensers (0.01 or 0.1 μfd.) may be connected in series across the primary of the power transformer in the oscilloscope with the common connection grounded to the case.

It is important that provision be included for switching off the electron beam, reducing the spot intensity, or swinging the beam to one side of the screen with d.c. bias when no signal voltage is applied. A pattern that is a thin, bright line or a small spot of high intensity will "burn" the screen of the cathode-ray tube.

Horizontal sweep voltage can be obtained either from an audio-frequency source (such as the modulator stage of the transmitter) or from the 60-cycle line. Using an a.f. horizontal sweep, the pattern appearing on the screen will be in the form of a trapezoid or triangle (depending on the percentage of modulation) when checking transmitter performance.

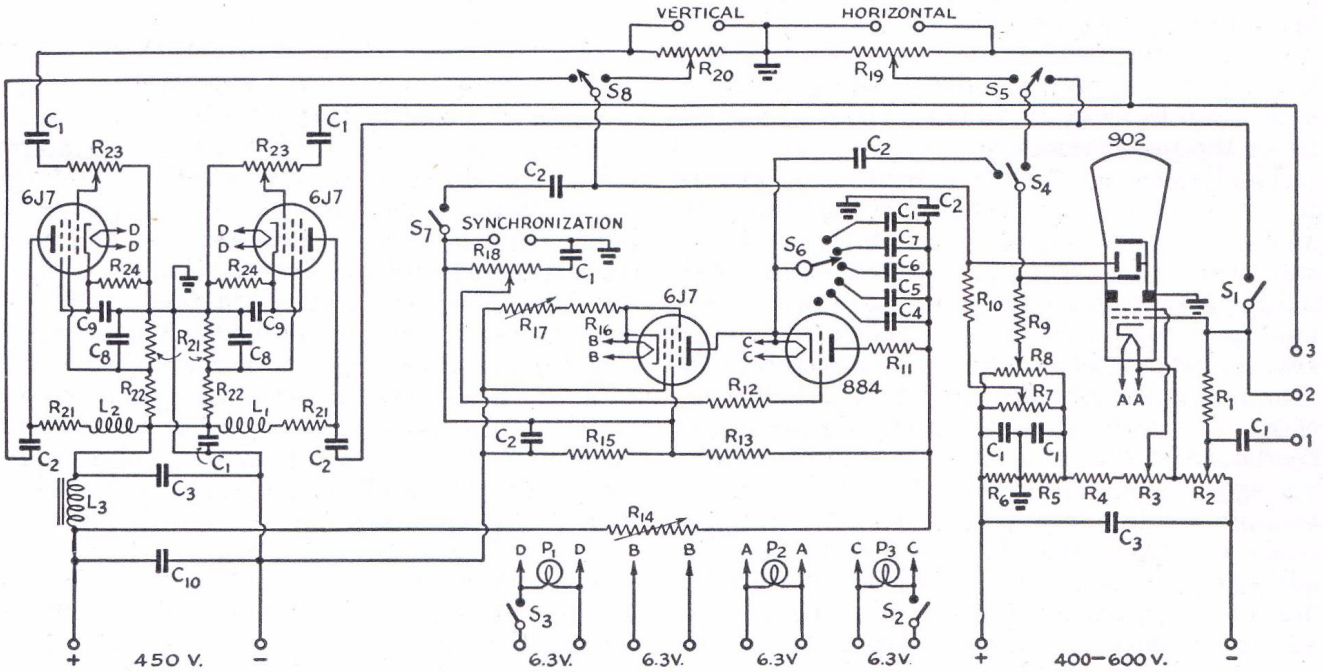

Fig. 1826 — Circuit diagram of complete oscilloscope with sweep circuit and voltage amplifiers.

C_1 — 0.1-μfd. 600-volt paper.
C_2 — 0.25-μfd. 600-volt paper.
C_3 — 8-μfd. 500-volt electrolytic.
C_4 — 0.0001-μfd. 400-volt paper.
C_5 — 0.001-μfd. 400-volt paper.
C_6 — 0.005-μfd. 400-volt paper.
C_7 — 0.025-μfd. 400-volt paper.
C_8 — 0.01-μfd. 400-volt paper.
C_9 — 5-μfd. 25-volt (electrolytic).
C_{10} — 16-μfd. (8-8 parallel) 500-volt electrolytic.
R_1 — 300,000 ohms, ½-watt.
R_2 — 25,000 ohms, 1-watt.
R_3 — 50,000 ohms, 1-watt.
R_4 — 75,000 ohms, 1-watt.
R_5, R_6 — 30,000 ohms, 1-watt.
R_7, R_8 — 1-meg. potentiometer.
R_9, R_{10} — 5-meg. ½-watt.
R_{11} — 1000 ohms, 1-watt.
R_{12} — 300,000 ohms, 1-watt.
R_{13} — 40,000 ohms, 1-watt.
R_{14} — 50,000-ohm wire-wound rheostat.
R_{15} — 6000 ohms, 2-watt.
R_{16} — 1500 ohms, 1-watt.
R_{17} — 50,000-ohm rheostat.
R_{18} — 500,000-ohm potentiometer.
R_{19}, R_{20} — 5-megohm potentiometer.
R_{21} — 100,000 ohms, 1-watt.
R_{22} — 150,000 ohms, 1-watt.
R_{23} — 500,000-ohm potentiometer.
R_{24} — 1000 ohms, ½-watt.
S_1, S_2, S_3 — S.p.s.t. toggle.
S_4, S_5, S_8 — S.p.d.t. toggle.
S_6 — 6-contact selector switch.
S_7 — Snap switch mounted on R_{18}.
L_1, L_2 — 25-mh. choke.
L_3 — 30-henry 15 ma. choke.
P_1, P_2, P_3 — Jeweled pilot lamps.

For actual studies of wave form the use of a sweep circuit having a linear time base is necessary (§ 3-9). The sweep circuit proper usually employs a grid-controlled gaseous discharge tube (the 884 and 885 are especially designed for this purpose), operating as a relaxation oscillator. In operation, the sweep circuit is connected to the horizontal-deflection plates of the existing oscilloscope. The voltage under observation is connected to the vertical-deflection plates, and the resulting picture is an accurate representation of the wave shape of the voltage being examined.

Since cathode-ray tubes have a sensitivity of perhaps 100 volts per inch they are not suitable for use with potentials of less than several volts. External amplifiers, usually of the resistance-coupled type to provide high gain with wide frequency range and low distortion, are therefore required for small voltages.

An example of a linear sweep circuit and wide-range amplifiers applied to a 2-in. cathode-ray tube is shown in Fig. 1826. The circuit elements in the center of the diagram comprise the sweep circuit. The 884 generates a sawtooth sweep voltage and the 6J7 acts as a current-limiting tube to ensure linearity.

The high-gain vertical and horizontal amplifiers using 6J7's have inductance compensation in the plate circuits to extend their frequency range. For r.f. the input is applied directly to the deflection plates.

The panel controls are: intensity control, R_2; focussing control, R_3; horizontal and vertical spot positioning controls, R_7 and R_8; sweep amplitude control, R_{14}; sweep frequency vernier, R_{17}; synchronization control, R_{18}; direct input controls, R_{19} and R_{20}; amplifier input controls, R_{23}.

Amplifier input and output leads should be direct and placed well clear of other components to avoid frequency distortion and unwanted pick-up.

• R, Z, C, L AND Q MEASUREMENTS

It is frequently necessary to measure the components used in the construction of amateur equipment — resistors, condensers, coils, etc. — both as a means of identification and in checking accuracy. The advanced amateur will also be interested in measuring impedances and the characteristics of devices of his own construction or under other than rated conditions.

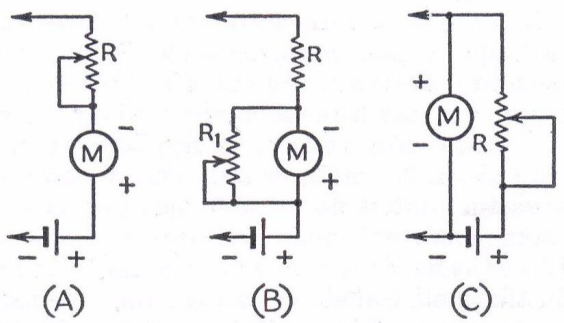

Fig. 1827 — Ohmmeter circuits. (A) Series ohmmeter with series compensation. (B) Series ohmmeter with shunt compensation. (C) Shunt ohmmeter for measuring low resistances.

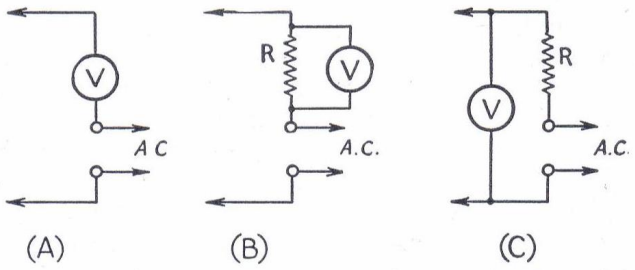

Fig. 1828 — Reactance-meter circuits for checking capacity and inductance values.

Resistance — The volt-ammeter, ohmmeter and Wheatstone bridge methods are commonly used in measuring resistance. In the volt-ammeter method, the resistance is determined from Ohm's Law by measuring the current through the resistor when a known d.c. voltage is applied. The resistance can be determined with a voltmeter alone if its internal resistance is known

$$R = \frac{eR_m}{E} - Rm$$

where R is the resistance under measurement,
E is the voltage read on the meter,
e is the series voltage applied, and
R_m is the internal resistance of the meter (full-scale reading in volts x ohms-per-volt).

The ohmmeter is a practical application of this method, with a low-current d.c. voltmeter and a source of voltage (usually dry cells), connected in series with the unknown resistance. If the meter reads full-scale with the connecting leads shorted, insertion of the resistance under measurement will cause the reading to decrease in proportion to the amount of resistance inserted. The scale can therefore be calibrated in ohms.

In Fig. 1827-A, the series resistance is adjusted until the milliammeter reads full-scale when the test leads are shorted. When the meter reading changes as the battery ages, this resistance is reduced, compensating for the change. In (*B*) the series resistance is kept constant but the sensitivity of the meter is varied to compensate for the changing voltage. The circuit of (*C*) is useful for measuring resistances below a few hundred ohms. The unknown resistance is connected as a shunt across the meter, reducing the current reading. Values of a fraction of an ohm can be read in this way.

The ratio of resistances which can be measured on a single ohmmeter range averages about 100 to 1, or from one-tenth to ten times the center-scale value.

Only approximate measurements can be made with an ohmmeter. For greater accuracy the unknown resistor may be compared with a standard resistance of known accuracy by means of a Wheatstone bridge (§ 2-11). If resistance measurements only are to be made, the bridge may be powered by a battery and a milliammeter used for the balance indicator. If reactances are also to be measured, an a.c. source is required (Fig. 1829).

Capacity and inductance — The capacity of condensers and the inductance of coils can be measured (a) in terms of their reactances, (b) by comparison with a standard, and (c) by substitution methods.

The reactance method is simplest but least accurate. The method is similar to the d.c. ohmmeter, except that impedance is measured instead of resistance. In Fig. 1828, at (A) the unknown reactance is placed in series with an a.c. rectifier-type voltmeter across the 115-volt a.c. line. With a 1000-ohms-per-volt meter, capacities can be identified from approximately 0.001-μfd. to 0.1-μfd. At (B) the reactance is connected in series with a 1000-ohm resistance; the proportionate voltage drop across this resistance indicates the reactance of condensers from 0.1 μfd. to 10 μfd. and inductances from 0.5 henry to 50 henries, when Q is greater than 10. Because the lower end of the scale of a rectifier-type meter is somewhat crowded, a better reading can be had by using the connection at (C) for large reactances. Approximate calibrations for each connection may be made by checking typical condensers and coils of known values and drawing calibration curves for the voltmeter in use.

The reactance method at best gives only approximate indications of inductance and capacity. For accurate measurements, an a.c. bridge must be used.

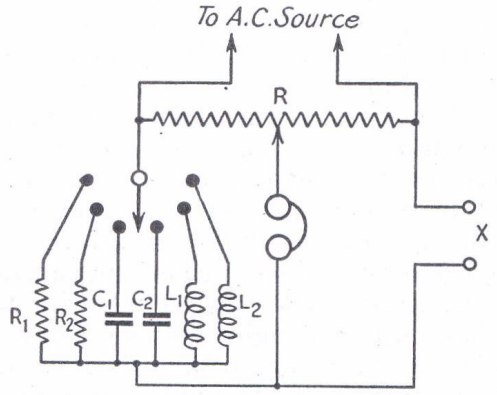

Fig. 1829 — Simple a.c. bridge for measuring resistance, inductance and capacity.
C_1 — 0.01-μfd. mica.
C_2 — 1.0-μfd. paper.
R — 10,000-ohm linear wire-wound potentiometer.
R_1 — 100 ohms, wire-wound (1% accuracy).
R_2 — 10,000 ohms, wire-wound (1%).
L_1 — 125-millihenry iron-core r.f. choke.
L_2 — 12-henry iron-core choke (Thordarson T-49C91).

A simple bridge for the measurement of R, C and L is shown in Fig. 1829. Its accuracy will depend on the precision of the standards, the sensitivity of the detector or balance indicator, the voltage and frequency of the a.c. source, and the ratio of the unknown value to the standard. The signal source can be a 1000-cycle audio oscillator with low harmonic content and the detector a pair of headphones. A "magic-eye" tube can also be used as a detector.

For maximum accuracy the ratio of the unknown to the standard should be kept small, so that R is read near the center of its scale. The ratio can be as high as 10 to 1 in either direction with good accuracy, and an indication can be had even at 100 to 1. Additional standards can be included for other ranges if desired.

The potentiometer R must be calibrated as accurately as possible in terms of the *ratio* of resistance on either side of its mid-point, which may be arbitrarily marked 10. If the potentiometer is next set at 500 ohms, the ratio of resistances is 1 to 10 and the scale may be marked 1. The corresponding point on the other end of the scale is marked 100. Intermediate points are similarly marked according to the resistance ratios. These ratios will then correspond with the ratio of the unknown resistance, inductance or capacity to the standard in use, when the bridge has been balanced for a null indication on the detector.

Since direct current flowing through a coil changes its inductance, allowance must be made for this in measuring choke coils and transformers carrying d.c.

Condensers should be checked for leakage as well as capacity. This check must be made with the rated d.c. voltage applied, a microammeter being connected in series with the high voltage source. The resistance of good paper condensers should be above 50 megohms per microfarad, that of mica above 100.

The condition of electrolytic condensers can be checked roughly with an ohmmeter. With the positive terminal of the condenser connected to the positive of the ohmmeter battery, high-voltage electrolytics should show a resistance of 0.5-megohm or so; low-voltage cathode by-pass condensers should be over 0.1 megohm. Electrolytics can also be checked by measuring the leakage current when the rated d.c. polarizing voltage is applied. It should read about 0.1 ma. per μfd. The maximum for a useful unit is about 0.5 ma. per μfd. Low leakage current also indicates a faulty unit. Electrolytic condensers which have lain idle on the shelf will show leakage currents as high as 2 ma. per μfd. per 100 volts. After "aging" for a few minutes at rated d.c. voltage they should return to normal, however.

The measurement of small capacities under

0.001 μfd. is not possible with a bridge of the type previously described because stray reactances affect the accuracy. A more accurate bridge for measurement of small capacities is shown in Fig. 1830. It is of the substitution type with a calibrated air condenser, C_1, for the variable arm. C_2 is a fixed reference capacity. C_3 is used to balance out stray capacity including that of the leads to C_x. The bridge is first balanced by adjusting C_3, with C_1 at maximum capacity and the leads to C_x in place. C_x is then connected and the bridge again balanced by adjusting C_1. The difference in capacity ($\triangle C$) of C_1 between its new setting and its maximum capacity represents the capacity of C_x.

It is impossible to get a zero null indication from the detector unless the resistances as well

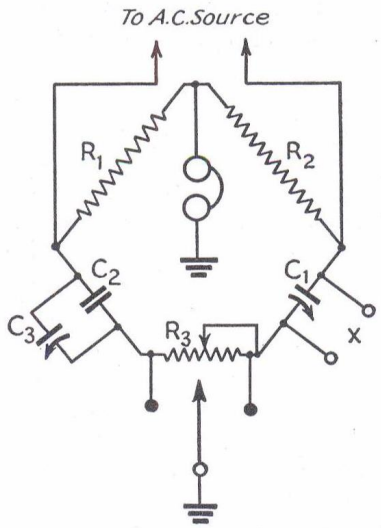

Fig. 1830 — Substitution-type capacity bridge.
C_1 — 1000-μμfd. straight-line-capacity condenser (can be dual 500-μμfd. with sections in parallel).
C_2 — 900-μμfd. silver-mica.
C_3 — 100-μμfd. variable trimmer.
R_1, R_2 — 5000-ohm wire-wound (1%).
R_3 — 1000-ohm wire-wound potentiometer.

as the capacities of the two condensers being compared are equal. R_3 is therefore included to aid in achieving a resistive balance. Generally speaking, R_3 will be in the C_2 leg when measuring a mica condenser and in the C_1 leg for an air condenser. The bridge is brought into balance by alternately varying the standard capacity C_1 and equalizing the power factors by R_3 until zero indication is obtained.

The bridge can be made direct-reading in μμfd. by using a dial with 100 divisions and a 10-division vernier (such as the National Type N), installed so that 0 on the dial corresponds to maximum capacity on C_1. Then as the capacity of C_1 is decreased to compensate for the addition of C_x, $\triangle C$ is numerically equal to the dial reading times 10. The true capacity of C_1 will depart from linearity with the dial setting as it nears zero, but the percentage error remains small up to at least 90 on the dial ($C_x < 900$ μμfd). The overall accuracy can be made better than 1%.

L, C and Q measurements at r.f. — The low-frequency a.c. bridge method of measuring inductance is of value only with high-inductance coils for use at power and audio frequencies. I.f. and r.f. coils must be measured at frequencies similar to those at which they are used.

The method commonly employed is to determine the frequency at which the coil resonates when connected across a capacity of known value. This may be done (a) by connecting the coil-condenser combination in a two-terminal oscillator (§ 3–7) and observing the resulting oscillation frequency on a calibrated receiver, or (b) by connecting the coil to a calibrated condenser, supplying the circuit with r.f. power from a suitable oscillator, and tuning the condenser until resonance is indicated by maximum indication on a vacuum-tube voltmeter (Fig. 1831). With the capacity known in μμfd and the resonant frequency in kc., the apparent inductance of the coil in microhenries can be computed

$$L = \left(\frac{159,160}{f_2}\right)^2 \frac{1}{C}$$

The apparent inductance thus computed is in error, however, in that it also includes the distributed capacity of the coil. This will be discovered if a similar measurement is made at another frequency (for example, the harmonic of f_1), for it will be found that a different value of inductance results. However, by combining the two measurements the true inductance can be found

$$L = \frac{1}{8422 f_2} \times \frac{1}{C_1 - C_2}$$

when f_2 is the second harmonic of f_1, C_1 is the capacity required to tune to f_1 and C_2 to f_2.

A convenient source of r.f. power for the two-frequency method of inductance measurement is the transmitter exciter unit, provided it has good second harmonic output. The oscillator output and link circuit (shown inside dashed lines in Fig. 1831) should either be shielded or sufficiently remote from the measuring circuit so that the vacuum-tube voltmeter shows no indication when there is no coil in the circuit. The calibrated condenser must, of course, have sufficient capacity to tune over a 2-to-1 frequency range. It can be calibrated by a bridge such as the substitution-type capacity bridge of Fig. 1830.

The resonance method can also be used for accurate measurement of capacity. A standard coil of suitable inductance must be provided;

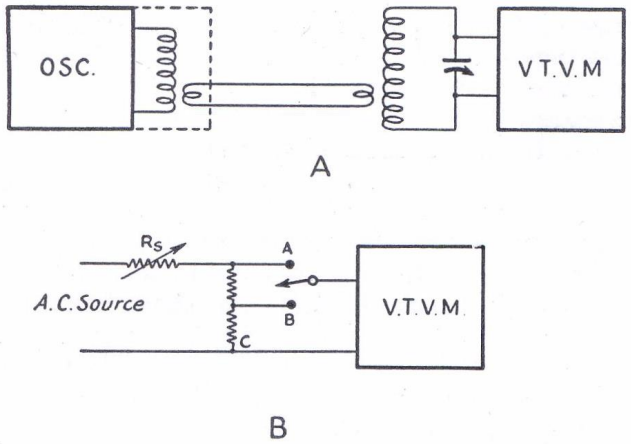

Fig. 1831 — (A) Circuit used in measuring inductance, capacity and Q at r.f. The calibrated variable-frequency oscillator should have a tuning range in excess of 2-to-1. (B) Circuit for calibrating the v.t.v.m. for Q measurements from 60-cycle a.c. R_{BC} is 70.7% of R_{AC}. With the switch in position A, R_S is adjusted to give a voltmeter deflection near the upper part of its scale; this is the peak-deflection reference point. The switch is then turned to position B, and the new reading noted. By making a number of measurements with different initial input levels, a graph can be plotted showing peak and 70.7% readings for a wide range of inputs.

the exact value is not important. The standard condenser C_1 is first tuned to resonance with the oscillator frequency. The unknown capacity, C_x, is then added in parallel and the capacity of C_1 reduced until the circuit again resonates at the oscillator frequency. The difference between the two settings ($\triangle C$) represents the capacity of C_x.

The arrangement of Fig. 1831 is additionally useful in that it can be used as a Q meter, measuring r.f. resistance and impedance.

As is shown by Fig. 1832, resistance in a tuned circuit broadens the resonance curve. By measuring the frequency difference between the two points at which the output voltage equals 70.7% of the peak voltage (where the resistance in the circuit equals its reactance), the Q of coils and condensers can be computed.

There are two methods of determining these points. One involves the use of a calibrated variable frequency oscillator to determine the bandwidth in terms of frequency change and the other a calibrated variable condenser to measure the capacity change.

When the calibrated variable oscillator and v.t.v.m. are used, the frequency and r.f. voltage at resonance are first noted. The oscillator frequency is then varied on either side of resonance until the v.t.v.m. reads 70.7% of its initial value. Then Q is equal to the frequency divided by the bandwidth, or

$$Q = \frac{f_r}{\Delta f}$$

where Δf is the difference between the frequencies f_1 and f_2.

When the frequency of the oscillator is fixed and a calibrated variable condenser is used, the capacity at resonance (C_r) is noted, as well as that on either side at which the voltmeter reads 70.7% of maximum. Then

$$Q = \frac{2\,C_r}{C_2 - C_1}$$

The foregoing applies to the measurement of the Q of coils. Actually, the figure of Q thus derived is not that for the coil alone but for the tuned circuit as a whole, including the condenser. The Q of the standard condenser must therefore be kept high. An efficient air condenser with steatite or mycalyx insulation is required; it should be operated near maximum capacity. Use short, heavy leads and keep the stray capacities as low as possible.

The Q of other air condensers and of mica condensers can be determined by first measuring the Q of the circuit with a standard coil in place, then connecting C_x in parallel with C and again measuring the Q. The Q of the unknown condenser is

$$Q_x = \frac{(C_1 - C_2)\,Q_1\,Q_2}{C_1(Q_1 - Q_2)}$$

Low-Q mica and paper condensers ($Q <$ 1000) can be measured by inserting the unknown in series with L and C. Q_1 is measured

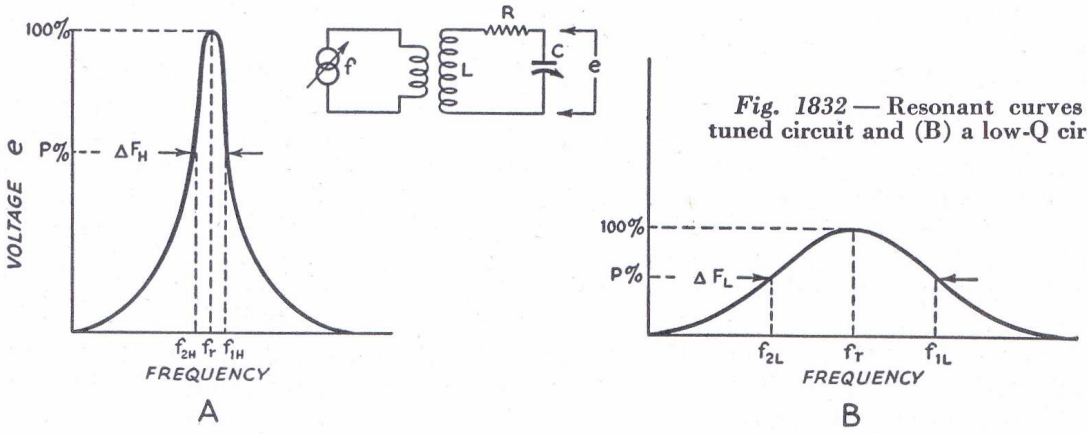

Fig. 1832 — Resonant curves of (A) a high-Q tuned circuit and (B) a low-Q circuit.

with a shorting bar across the unknown; the bar is then removed and Q_2 determined. Then

$$Q_x = \frac{(C_2 - C_1)\, Q_1\, Q_2}{C_1\, Q_1 - C_2\, Q_2}$$

If C_2 is larger than C_1, the reactance is inductive rather than capacitive; i.e., the "condenser" is actually an inductance at the measurement frequency.

The r.f. resistance, reactance and impedance of other components can be measured by the same methods. If an external r.f. impedance (such as an antenna or transmission line or an r.f. choke) is inserted in a coil-condenser circuit, it will both detune the circuit and broaden its resonance curve. By observing the capacity required to bring the circuit back to resonance and measuring the additional resistance introduced by re-measuring its Q, the reactive and resistive components of the external impedance can be computed.

Using a standard coil and condenser suitable for the operating frequency, connect the unknown quantity across C_1 (for high resistances) or in series with L and C (for low resistances), and proceed as previously outlined. If C_1 must be increased to restore resonance, the reactance of the unknown is inductive; if it must be decreased, the reactance is capacitive.

• RECEIVER CHARACTERISTICS

Measurements in connection with receiving equipment come under two heads, (1) overall performance and (2) servicing and alignment. The measurement of receiver performance requires precision laboratory equipment beyond the scope of the average amateur. Sufficient apparatus for servicing receivers should be available in every amateur station, however. This may be as little as a multi-range volt-ohm-milliammeter, a test-signal source of some description, and a few spare tubes.

For the alignment of tuned circuits a simple test oscillator is required, preferably one that can be modulated by a 400-cycle audio oscillator. A rectifier-type voltmeter can be used for the output meter.

The frequency meter is a suitable signal source for r.f. alignment provided the harmonic amplitude on the higher-frequency bands is great enough. A harmonic amplifier and output attenuator are useful in this application.

The i.f. test oscillator circuit shown in Fig. 1833 consists of a simple e.c.o. with plug-in coils. The output level is controlled by a potentiometer so connected as to present a constant input resistance to the receiver. The oscillator should be shielded so that direct pick-up is minimized. It is helpful to make all ground returns to a heavy copper strap which is connected to the cabinet at only one point — the output ground terminal. The plug-in-coil should be separately shielded.

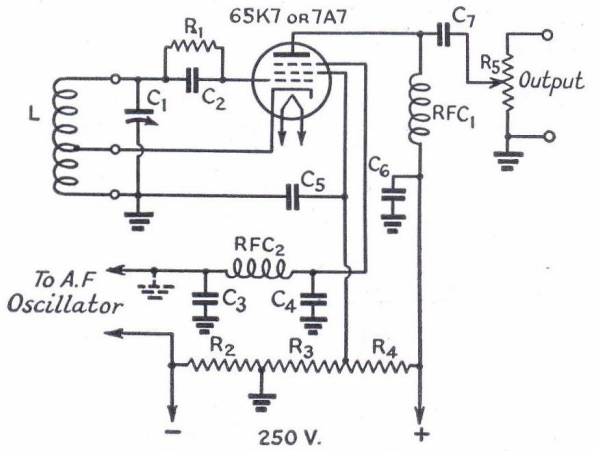

Fig. 1833 — I.f. test oscillator circuit.

C_1 — 100-$\mu\mu$fd. variable with 200-$\mu\mu$fd. silver-mica in parallel.
C_2 — 100-$\mu\mu$fd. midget mica.
C_3, C_4 — 250-$\mu\mu$fd. midget mica.
C_5 — 0.005-μfd. mica.
C_6 — 0.1-μfd. 400-volt paper.
C_7 — 500-$\mu\mu$fd. midget mica.
R_1 — 50,000 ohms, ½-watt.
R_2 — 2000 ohms, ½-watt.
R_3 — 20,000 ohms, 1-watt.
R_4 — 20,000 ohms, 2-watt.
R_5 — 500-ohm carbon potentiometer.
L — 440–510 kc.: 140 turns No. 30 enamel close-wound on 1½-inch plug-in form. Cathode tap 35 turns from ground end.
1400–1550 kc.: 42 turns No. 20 d.s.c., tapped 10 turns.
4500–5500 kc.: 11 turns No. 18 e. spaced wire diameter, tapped 3 turns.
RFC_1 — 2.5-mh. r.f. choke.
RFC_2 — 25-mh. r.f. choke.

The test oscillator may be suppressor-grid modulated by applying approximately 10 volts of audio (for 50% modulation), as shown in the diagram. The suppressor-grid is biased 10-volts negative for modulated use; if an unmodulated signal is desired, the upper terminal can be grounded as indicated. This will increase the output from the oscillator. Conversely, if the output potentiometer does not attenuate the signal sufficiently, additional d.c. negative bias can be applied between the modulation terminals.

Ordinarily there is no requirement for precise calibration of the test oscillator. In i.f. alignment most communications receivers are equipped with a crystal filter and the oscillator frequency is set to correspond with the crystal response. If the receiver contains no crystal filter, the oscillator should be set at the design i.f. as closely as its calibration will permit.

With an unmodulated test signal the output indicator can be the "S"-meter in the receiver, a microammeter in the detector or a.v.c. circuit, or a vacuum-tube voltmeter. It is not advisable to use the receiver beat oscillator to generate an audible note for out-

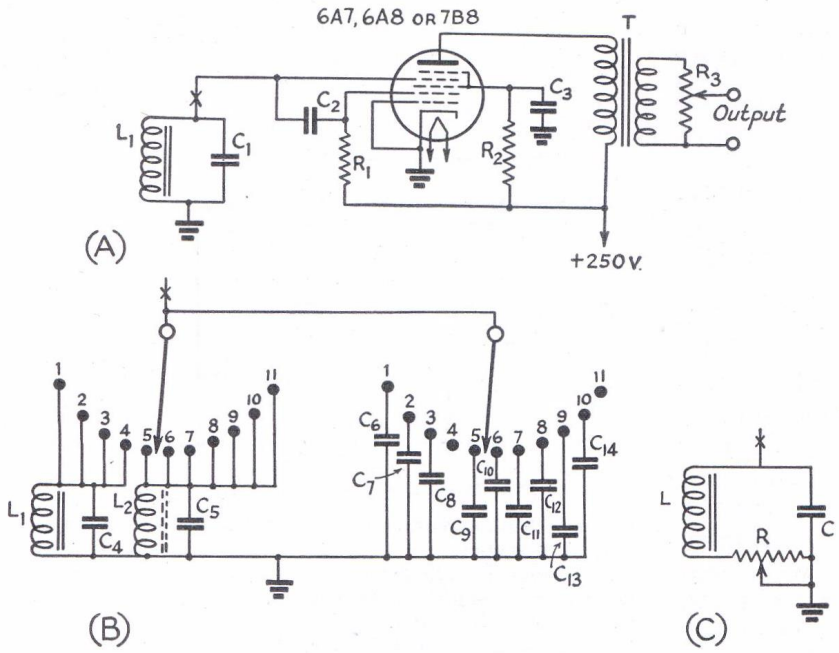

Fig. 1834 — Audio-frequency oscillator circuit.
C_1 — 0.15-μfd. 400-volt paper.
C_2, C_8 — 0.1-μfd. 400-volt paper.
C_3 — 0.25-μfd. 200-volt paper.
C_4, C_{11} — 0.03-μfd. 400-volt paper.
C_5, C_{14} — 0.003-μfd. 600-volt paper.
C_6 — 2-μfd. 200-volt paper.
C_7 — 0.5-μfd. 200-volt paper.
C_9 — 0.3-μfd. 200-volt paper.
C_{10} — 0.05-μfd. 600-volt paper.
C_{12} — 0.02-μfd. 600-volt paper.
C_{13} — 0.01-μfd. 600-volt paper.
R_1, R_2 — 50,000 ohms, 1 watt.
R_3 — 50,000-ohm volume control.
L_1 — 1.2-henry choke (Thordarson T-14C61 with iron core removed).
L_2 — 125-mh. iron-core r.f. choke.
T — Output transformer (interstage audio transformer, 1:3 ratio).
For L, C and R in (C), see text.

put indications. When a modulated test signal is used, the output indicator can be a copper-oxide rectifier-type voltmeter which reads the a.f. voltage across the rated output load resistance. Power output can be computed as previously described.

The a.f. modulating source for the test oscillator can be any audio oscillator capable of delivering 10 to 20 volts at the standard receiver checking frequency of 400 cycles.

A useful audio oscillator circuit is shown in Fig. 1834. It is a two-terminal or "transitron" oscillator using a pentagrid tube. A frequency of approximately 400 cycles is generated with the tuned circuit shown at (A). Substituting the tuned circuit at (B) provides eleven audio frequencies which can be selected by a tap switch: (1) 100, (2) 200, (3) 400, (4) 800, (5) 1000, (6) 2000, (7) 3000, (8) 4000, (9) 5000, (10) 7000 and (11) 10,000 cycles.

A variable frequency oscillator can be made by inserting a resistance in the tuned circuit as shown at (C). The highest frequency available is determined by L and C alone, and will correspond to the values in (B). Increasing R will decrease the frequency. If R is made 5000 ohms, a frequency ratio of about 5 to 1 can be obtained. A good-quality wire-wound variable resistor should be used. If difficulty is had making the tube oscillate over the entire range of R, try other values of R_1 and C_2.

• TRANSMITTER CHARACTERISTICS

The transmitter characteristics ordinarily requiring measurement are d.c., a.c. and r.f. voltages and currents, keying and modulation quality, and modulation percentage. Instruments for the measurement of voltages and currents have been discussed. Keying and modulation checks may be made by several methods; the two commonly used by amateurs are aural checks with monitors, and visual checks with the oscilloscope (§ 5-10).

Monitors — A monitor is a miniature receiver, usually having only a single tube, enclosed with its batteries in some sort of metal box which serves as a shield. The requirements for a satisfactory monitor for checking c.w. signals are not difficult to satisfy. It should oscillate steadily over the bands on which the station is to be active; the tuning should not be excessively critical, although the degree of band-spread ordinarily considered desirable for receivers is not essential; the shielding should be complete enough to permit the monitor to be placed near the transmitter and still give a good beat note when tuned to the fundamental frequency of the transmitter (this is often impossible with the receiver because the pick-up is too great); and it should be constructed solidly so that it can be moved around the station without necessity for retuning when listening to a signal.

The circuit of a simple monitor with band-switching covering four amateur bands is shown in Fig. 1835. Any 1.5- or 2-volt filament triode can be used, as well as any batteries of a size that will fit into the container selected. A plate-tickler switch (S_3) is provided to make the monitor non-oscillating when checking 'phone signals. If desired, a regeneration control could be incorporated (§ 7-4).

Any type of simple detector with a means for picking up a small amount of r.f. from the transmitter can be used as a 'phone monitor. A satisfactory monitor can be constructed using a diode rectifier and untuned pick-up coil, as shown in Fig. 1836-A. Headphones are used for listening checks. The monitor can also be employed as an over-modulation indi-

cator by use of the 0–1 milliammeter. The pick-up coil is loosely coupled to the tank circuit of the final r.f. amplifier until the milliammeter reads approximately 0.9 m.a. The speech amplifier is supplied with a 400-cycle sine-wave tone from an audio oscillator such as that shown in Fig. 1834, and the gain control turned up until the monitor meter starts to rise, indicating overmodulation.

The circuit at 1837-B indicates the percentage of modulation directly. The a.c. milliammeter is first plugged into the left-hand jack and the pick-up coupling adjusted to give a full-scale meter reading on the unmodulated carrier. Then the meter is plugged into the right-hand jack and the transmitter modulated by a tone or speech signal. The modulation percentage will be 140 times the reading of the meter; e.g., for 100% modulation the meter will read approximately 0.7 ma. In measuring the percentage of modulation with speech the inertia of meter will cause it to undershoot on peaks; the maximum swing should therefore be limited to something less than 0.7 ma.

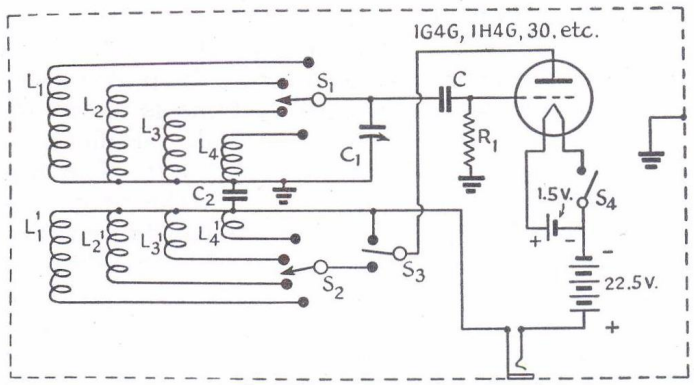

Fig. 1835 — C.w. and 'phone monitor.
C_1 — 50-$\mu\mu$fd. midget variable.
C_2 — 0.002-μfd. midget mica.
C_3 — 100-$\mu\mu$fd. midget mica.
R_1 — 1 megohm, ½-watt.
S_1–S_2 — 2-section 4-position rotary band switch.
S_3 — S.p.d.t. low-capacity switch.
S_4 — Toggle switch.

Band	*L*	*L'*
1750	90 t. No. 30 e.	24 t.
3500	50 t. No. 30 d.c.c.	16 t.
7000	30 t. No. 22 d.c.c.	10 t.
14000	10 t. No. 22 d.c.c.	6 t.

All coils close wound on 1-in. diameter forms, grouped around S_1–S_2 with adjacent coils at right angles. L and L' approximately ¼-in. apart.

• ANTENNA MEASUREMENTS

Antenna measurements are made for the purpose (a) of securing maximum transfer of power to the antenna from the transmitter, and (b) of adjusting directional antennas to conform with design conditions. Measurements are therefore made of the current (power) in the antenna, voltage and current relationships, resistance, and radiated field intensity. Related to measurements of the antenna proper is the measurement of transmission line characteristics, chiefly involving impedance and resistance.

The instruments described for r.f. measurement (thermocouple ammeter, vacuum-tube voltmeter, *L*, *C* and *Q* meter) are all applicable to antenna measurement.

Field-intensity meters — In adjusting antenna systems for maximum radiation and in determining radiation patterns, use is made of field intensity meters. Fundamentally the field-intensity meter is a vacuum-tube voltmeter provided with a tuned input circuit. It is used to indicate the relative intensity of the radiation field under actual *radiating* con-

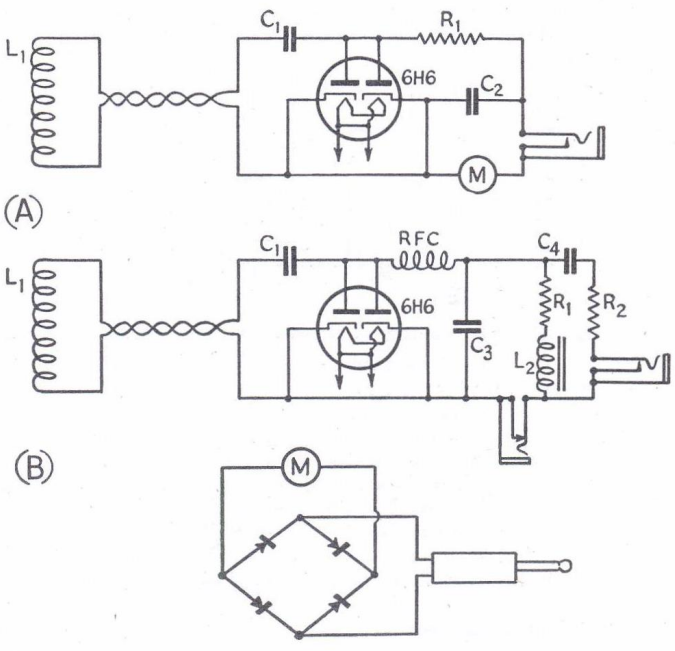

Fig. 1836 — (A) 'Phone monitor and overmodulation indicator.
C_1 — 0.005-μfd. midget mica.
C_2 — 0.01-μfd. paper.
R_1 — 0.15 megohm, ½-watt.
L_1 — Pick-up coil (enough turns of hook-up wire to give 1 ma. deflection on meter when loosely coupled to final tank).
M — 0–1 ma. d.c. milliammeter.

(B) Modulation percentage indicator.
C_1, R_1 and L_1 same as above.
C_3 — 0.005-μfd. midget mica.
C_4 — 1.0-μfd. paper.
R_2 — 0.25 megohm, ½-watt.
L_2 — 30–50 henry iron-core choke.
M — 0–1 ma. a.c. milliammeter (d.c. meter with copper-oxide rectifier).

ditions. It is particularly useful on the ultra-high frequencies and in adjusting directional antennas. Checks with a field-intensity meter should be made at points not less than several wavelengths distant from the antenna and at

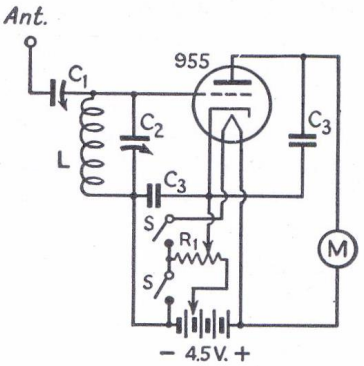

Fig. 1837 — U.h.f. field-intensity meter.

C_1 — 30-$\mu\mu$fd. mica trimmer.
C_2 — 35-$\mu\mu$fd. midget trimmer.
C_3 — 250-$\mu\mu$fd. midget mica.
R_1 — 1000-ohm potentiometer.
L — 50–80 Mc.: 7 turns No. 14 tinned wire, ½-in. diam. 1-in. long.
25–40 Mc.: 10 turns No. 14 tinned wire, ¾-in. diam. 1-in. long.
12–20 Mc.: 20 turns No. 16 enamel wire, close-wound on ¾-in. diameter bakelite tubing.
6–10 Mc.: 37 turns No. 22 enamel wire, close-wound on ¾-inch tube.
M — 0–200 microamperes.

heights corresponding with the desired angle of radiation.

The absorption frequency meter shown in Figs. 1803–1804 may be used as a field strength meter if it is provided with a pick-up antenna. This can be short length of brass rod or an automotive-type antenna mounted on a stand-off insulator and connected to the stator of the tuning condenser through a small trimmer. The crystal detector is not linear, so that a given increase in current does not indicate a directly proportional increase in field strength.

A simple field intensity meter particularly suitable for work in the u.h.f. region is shown in Fig. 1837. Essentially, it consists of an acorn triode operated with very low plate voltage and biased to cut-off, constituting a linear detector. When a signal is tuned in rectification occurs, and the plate-current increment is read on the microammeter. The microammeter scale will read approximately linearly with voltage, a characteristic that is advantageous in making certain types of comparative measurements. Radiated power variations will, of course, be as the square of the field-voltage indication.

A more sensitive field-intensity meter of use in examining the field-strength patterns of lower-frequency antenna systems is shown in Fig. 1838. It consists of a diode rectifier and d.c. amplifier in the same envelope. The initial plate current reading is in the neighborhood of 1.4 ma.; with signal input, the current dips downward. The scale reading is linear with signal voltage.

Power gain in antenna systems is usually expressed in terms of decibels. A field intensity meter that reads directly in db. is shown in Fig. 1839. It consists of self-biased linear triode voltmeter followed by a variable-μ d.c. amplifier tube. Because of the logarithmic grid voltage-plate current characteristic of this tube, a 0–1 ma. milliammeter in its plate circuit can be calibrated arbitrarily with a linear db scale as shown. For extreme accuracy an individual calibration should be made on a.c., but the arbitrary scale shown will be found sufficiently accurate to be useful.

The scale covers approximately 25 db. and is linear over a range of about 20 db. At very small signals it departs from linearity, and 0 db. is therefore placed at 90% of the scale. A variable meter shunt compensates for variations in tubes and battery voltages. In use the balancing resistor is adjusted to give a full-scale reading of 1 ma. The signal pick-up is then made such as to cause the meter to indicate 0 db. Alternatively, the initial reading can be set arbitrarily at 10 db.; adjustments will then be indicated as losses or gains in relation to that figure.

The range may be extended to +45 db. by inserting a 2-point tap switch in the lead to the 1T4 amplifier from the self-biasing resistor R_1 and tapping that resistor at 1 megohm to provide a 10-to-1 multiplier. Add 20 db. to scale readings when the multiplier is used.

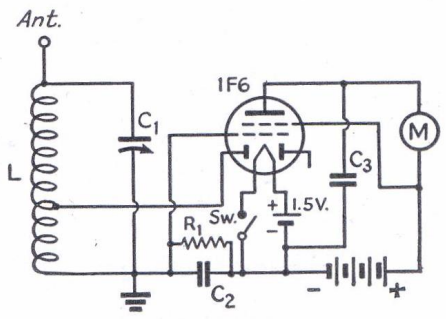

Fig. 1838 — Sensitive field-intensity meter.

C_1 — 50-$\mu\mu$fd. midget variable.
C_2 — 250-$\mu\mu$fd. midget mica.
C_3 — 0.002-μfd. midget mica.
R_1 — 1 megohm, ½-watt.
L — 1.5–3 Mc.: 58 turns No. 28 d.s.c., closewound.
3–6 Mc.: 29 turns No. 20 e., closewound.
6–12 Mc.: 15 turns No. 20 e., spaced.
11–22 Mc.: 8 turns No. 20 e., spaced.
20–40 Mc.: 4 turns No. 20 e., spaced.
Wound on 1½-in. coil forms, winding length 1½ in., diode tap in center of coil.
M — 0–1.5 milliamperes.

• TUBE CHARACTERISTICS

The best method of checking a receiving or transmitting tube is by direct comparison in its own socket with a new tube of known quality under actual operating conditions.

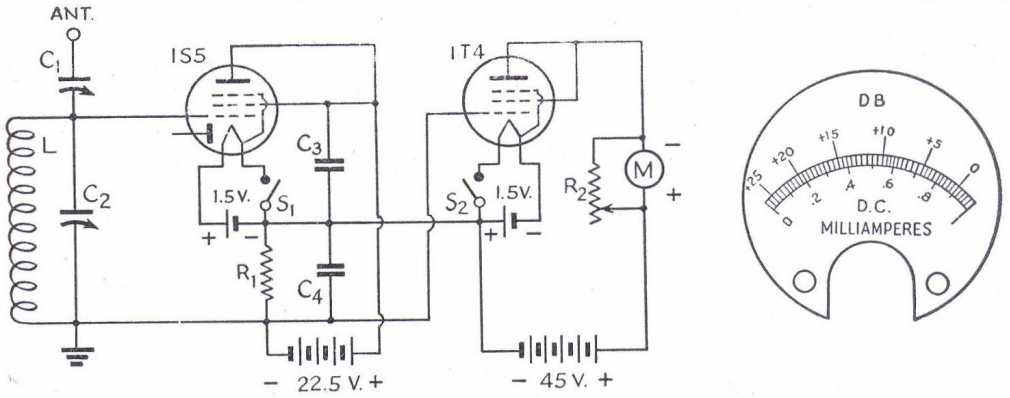

Fig. 1839 — Logarithmic field-intensity meter with db. calibration.

C_1 — 3–30-$\mu\mu$fd. mica trimmer.
C_2 — 50-$\mu\mu$fd. midget variable.
C_3, C_4 — 500-$\mu\mu$fd. midget mica.
R_1 — 10 megohms, ½-watt.
R_2 — 1000-ohm wirewound variable.
L — See coil data under Figs. 1837 and 1838.
S_1, S_2 — Toggle switches or d.p.s.t.
M — 0–1 ma. d.c. milliammeter.

Any other test falls short of an actual performance test.

For convenience, however, an auxiliary tube checker is desirable. A number of commercial tube checkers of the type used by servicemen are on the market. In purchasing one the following qualifications should be sought: (1) complete facilities for checking shorts between any pair of electrodes; (2) a transconductance rather than an "emission" test (the emission of a tube may vary widely with no effect on its performance, while genuinely faulty tubes may show rated emission); (3) provision for checking plate and screen currents under typical conditions (at rated voltages); (4) gas and noise tests.

The construction of a comprehensive tube-checker is an elaborate project. However, for an occasional need the amateur can assemble a circuit using an existing power source in accordance with Fig. 1840 to make a reasonably accurate standard transconductance test. A pentode tube is shown; for other types omit or add electrode connections as required. The voltages applied should correspond with those listed under "Typical Operating Conditions" in the tube tables of Chapter 20. They should be accurate to within 5% (especially grid voltage, plate voltage for triodes and screen voltage for pentodes). With the grid switch in No. 2 position, the plate and screen currents should read near the rated values; wide variations from normal indicate a defective tube.

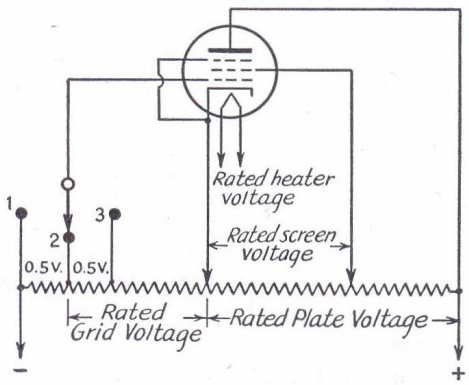

Fig. 1840 — Circuit for measuring vacuum-tube transconductance.

To make the transconductance test, note the plate current with the grid switch alternately on positions 3 and 1, changing the bias from exactly 0.5 volt less than rated bias to exactly 0.5 volt more. The resulting plate current change multiplied by 1000 equals the transconductance in micromhos. This value can be checked against the tables. Tubes will usually operate satisfactorily until the transconductance falls to 70% of the rated value.

Pentagrid and heptode frequency converters may be checked by this method if the rated d.c. electrode voltages are applied. The oscillator section can be checked separately by noting the oscillator-anode current change.

Diodes can be checked by applying 50 volts of 60-cycle a.c. between plate and cathode, in series with a 0.25-megohm load shunted by a 2-μfd. condenser, and reading the rectified current on a 0–1 ma. d.c. meter. A reading of 0.2 to 0.25 ma. indicates a satisfactory tube.

BIBLIOGRAPHY

[1] Grammer, *QST*, July, 1941, "A Sensitive Absorption Wavemeter."
[2] Grammer, *QST*, October, 1941, "A Lecher Wire System for U. H. Frequency Measurement."
[3] Goodman, *QST*, September, 1941, "A 50-, 100- and 1000-Kc. Oscillator for Band-Edge Spotting."
[4] Greek, *QST*, October, 1940, "A Complete Oscilloscope Using the 902."
[5] Stafford, *QST*, January, 1940, "Q Measurements."
[6] Poor, *QST*, June, 1940, "A Simple Modulation Monitor and Percentage Indicator."

CHAPTER NINETEEN

Workshop Practice

IN CONTRAST to earlier days of amateur radio, when many components were available only at prohibitive prices or not at all, the construction of a piece of equipment today resolves itself chiefly into proper assembly and wiring of the various components.

• TOOLS

While the greater the variety of tools available, the easier and, perhaps, the better the job may be done, with a little thought and care it is possible to turn out a fine piece of equipment with comparatively few common hand tools. A list of tools which will be found indispensable in the construction of amateur equipment will be found on this page. With these tools it should be possible to perform any of the required operations in preparing panels and metal chassis for assembly and wiring. A few additional tools will make certain operations easier, so it is a good idea for the amateur who does constructional work at intervals to add to his supply of tools from time to time. The following list will be found helpful in making a selection:

Bench vise, 4-in. jaws
Tin shears, 10-in. for cutting thin sheet metal
Taper reamer, ½-in. for enlarging small holes
Taper reamer, 1-in. for enlarging holes
Countersink for brace
Carpenter's plane, 8- to 12-in. for woodworking
Carpenter's saw, cross-cut
Motor-driven emery wheel for grinding
Long-shank screwdriver with screw-holding clip for tight places
Set of "spintite" socket wrenches for hex nuts
Set small flat open-end wrenches for hex nuts
Wood chisel, ½-in.
Cold chisel, ½-in.
Wing dividers, 8-in. for scribing circles
Set machine-screw taps and dies
Folding rule, 6-ft.
Dusting brush

Several of the pieces of light woodworking machinery, often sold in hardware stores and mail-order retail stores, are ideal for amateur radio work, especially the drill press, grinding head, band and circular saws and joiner. Although unnecessary, they are mentioned here for those who may be in a position to acquire them.

• CARE OF TOOLS

To a good workman, the proper care of tools is not only a matter of pride, but he also realizes the energy which may be saved and the annoyance which may be avoided by well kept sharp-edge tools. A few minutes with the oil stone or emery wheel now and then will maintain the fine cutting edges of knives, drills, chisels, etc.

Drills should be sharpened at frequent intervals so that grinding is kept at a minimum each time. This makes it easier to maintain the rather critical surface angles for best cutting with least wear.

The soldering iron may be kept in good condition by keeping the tip well tinned with solder and not allowing it to run at full voltage for long periods when it is not being used. After each period of use, the tip should be removed and cleaned of any scale, which may have accumulated. An oxidized tip may be cleaned by dipping in sal ammoniac while hot and wiping clean with a rag. Should the tip become pitted, it should be filed until smooth and then tinned by dipping it in solder.

All tools should be wiped occasionally with an oily cloth to prevent rust.

• USEFUL MATERIALS

Small stocks of various miscellaneous materials will be required from time to time. Most of them may be purchased from hardware or radio-supply stores. A representative list follows:

½-in. by 1/16-in. brass strip for brackets, etc. (half-hard for bending)
¼-in. square brass rod or ½-in. by ½-in. by 1/16-in. angle brass for corner joints
¼-in. diam. round brass rod for shaft extensions
Machine screws: Round-head, flat-head with nuts to fit. Most useful sizes, 4–36, 6–32, and 8–32 in lengths from ¼-in. to 1½-in. (Nickeled iron will be found satisfactory except in strong r.f. fields where brass should be used.)
Plain washers and lock washers for screws

Bakelite and hard rubber scraps
Soldering lugs, panel bearings, rubber grommets, lug terminal strips, cambric tubing

Machine screws, nuts, washers, soldering lugs, etc., are most reasonably purchased in quantities of a gross.

• CHASSIS CONSTRUCTION

With a few essential tools and proper procedure, it will be found that building radio gear on a metal chassis is no more of a chore than building with wood and a more satisfactory job results.

The placing of components on the chassis is shown quite clearly in the photographs and, aside from certain essential dimensions which are usually given in the text, an exact duplication of placement is not necessary.

Much trouble and energy can be saved by spending plenty of time on the planning end of the job. When all details have been worked out, the actual construction will be greatly simplified.

Cover the top of the chassis with a piece of wrapping paper, or preferably cross-section paper, folding the edges down over the sides of the chassis and fastening with adhesive tape. Next, assemble parts to be mounted on top of the chassis and move them about until a satisfactory arrangement has been found, keeping in mind any parts which are to be mounted underneath so that interferences in mountings will be avoided. Place condensers and other parts with shafts extending to the panel first and arrange so that the controls will form the desired pattern on the panel. Be sure to line up the shafts square with the chassis front. Locate any partition shields and panel brackets next and then sockets with their shields, if used, and other parts, marking the mounting-hole centers of each, accurately, on the paper. Watch out for condensers whose shafts do not line up with the mounting holes. Do not forget to mark the centers of socket holes and holes for leads under i.f. transformers, etc., as well as holes for wiring leads.

By means of the square, lines indicating ac-

INDISPENSABLE TOOLS

Long-nose pliers, 6-in.
Diagonal cutting pliers, 6-in.
Screwdriver, 6- to 7-in., ¼-in. blade
Screwdriver, 4- to 5-in., ⅛-in. blade
Scratch awl or ice pick for marking lines
Combination square, 12-in. for laying out work
Hand drill, ¼-in. chuck or larger, 2-speed type preferable
Electric soldering iron, 100 watts
Hacksaw, 12-in. blades
Center punch for marking hole centers
Hammer, ball peen, 1-lb. head
Heavy knife
Yardstick or other straight edge
Carpenter's brace with adjustable hole cutter or socket-hole punches (see text)
Pair small "C" clamps for holding work
Large coarse flat file
Large round or rat-tail file, ½-in. diameter
Three or four small and medium files, flat, round, half-round, triangular
Drills, particularly ¼-in., and Nos. 18, 28, 33, 42 and 50
Combination oil stone for sharpening tools
Solder and soldering paste (non-corroding)
Medium-weight machine oil

NUMBERED DRILL SIZES

Number	*Diameter (mils)*	*Will Clear Screw*	*Drilled for Tapping Iron, Steel or Brass**
1	228.0	—	—
2	221.0	12–24	—
3	213.0	—	14–24
4	209.0	12–20	—
5	205.0	—	—
6	204.0	—	—
7	201.0	—	—
8	199.0	—	—
9	196.0	—	—
10	193.5	10–32	—
11	191.0	10–24	—
12	189.0	—	—
13	185.0	—	—
14	182.0	—	—
15	180.0	—	—
16	177.0	—	12–24
17	173.0	—	—
18	**169.5**	**8–32**	—
19	166.0	—	12–20
20	161.0	—	—
21	159.0	—	10–32
22	157.0	—	—
23	154.0	—	—
24	152.0	—	—
25	149.5	—	10–24
26	147.0	—	—
27	144.0	—	—
28	**140.5**	**6–32**	—
29	**136.0**	—	**8–32**
30	128.5	—	—
31	120.0	—	—
32	116.0	—	—
33	**113.0**	**4–36 4–40**	—
34	111.0	—	—
35	**110.0**	—	**6–32**
36	106.5	—	—
37	104.0	—	—
38	101.5	—	—
39	099.5	3–48	—
40	098.0	—	—
41	096.0	—	—
42	**093.5**	—	**4–36 4–40**
43	089.0	2–56	—
44	086.0	—	—
45	082.0	—	3–48
46	081.0	—	—
47	078.5	—	—
48	076.0	—	—
49	073.0	—	2–56
50	**070.0**	—	—
51	067.0	—	—
52	063.5	—	—
53	059.5	—	—
54	055.0	—	—

* Use one size larger drill for tapping bakelite and hard rubber.

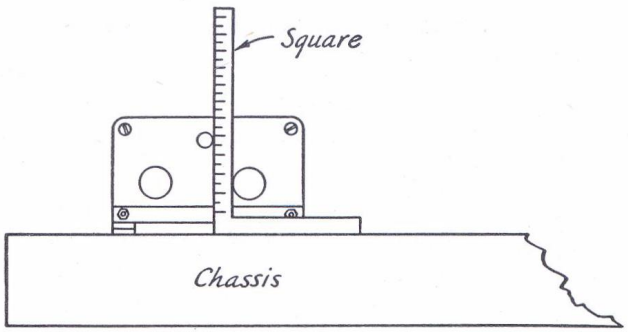

Fig. 1901 — **Method of measuring heights of shafts. If the square is adjustable, the end of the scale should be set flush with the face of the head.**

curately the centers of shafts should be extended to the front of the chassis and marked on the panel at the chassis line by fastening the panel temporarily. The hole centers may now be punched in the chassis with the center punch. After drilling, the parts which require mounting underneath may be located and the mounting holes drilled, making sure by trial that no interferences exist with parts mounted on top. Mounting holes along the front edge of the chassis should be transferred to the panel by once again fastening the panel to the chassis and marking from the rear.

Next mount on the chassis the condensers and any other parts with shafts extending to the panel, and measure accurately the height of the center of each shaft above the chassis as illustrated in Fig. 1901. The horizontal displacement of shafts having already been marked on the chassis line on the panel, the vertical displacement may now be measured from this line and the shaft centers marked on the back of the panel and the holes drilled. Holes for any other panel equipment coming above the chassis line may now be marked and drilled and the remainder of the apparatus mounted.

• DRILLING AND CUTTING HOLES

In drilling holes in metal with the hand drill, it is important that the centers be well located with the center punch so that the drill point will not "walk" away from the center when starting the hole. Care should be used to prevent too much pressure with small drills which bend or break easily. When the drill starts to break through, special care should be used and it is often an advantage to shift a two-speed drill to low gear at this point. Holes near ¼-in. in diameter may be started with a smaller drill and reamed out with a larger drill.

The chuck of the usual type of hand drill is limited to ¼-in. drills. Although it is rather tedious, the ¼-in. hole may be filed out to larger diameters with round files. Another possible method with limited tools is to drill a series of small holes with the hand drill along the inside of the diameter of the large hole, placing the holes as close together as possible. The center may then be knocked out with a cold chisel and the edges smoothed up with a file. Taper reamers which fit in the carpenter's brace make the job much easier. A large rat-tail file may be clamped in the brace and makes a very good reamer for holes up to the diameter of the file if the file is revolved counter-clockwise.

For socket holes and other large round holes, an adjustable cutter designed for the purpose may be used in the brace. When the cutter is well sharpened, it makes the job easy. Occasional application of machine oil in the cutting groove usually helps. The cutter should first be tried out on a block of wood to make sure that it is set for the correct diameter. Probably the easiest device of all for cutting socket holes is the socket-hole punch. The best type works by pressure applied by turning a screw with a wrench.

Square or rectangular holes may be cut out by using the series of small holes previously described, but more easily by drilling a ½-in. hole inside each corner, as illustrated in Fig. 1902, and using these holes for starting and turning the hacksaw. The socket-hole punches may also be of considerable assistance in cutting out large rectangular openings.

The burrs or rough edges which usually result in drilling or cutting holes may be removed with a file or sometimes more conveniently with a sharp knife or chisel. It is a good idea to keep an old wood chisel sharpened up for this purpose.

• CUTTING THREADS

Brass rod may be threaded or the damaged threads of a screw repaired by the use of *dies*. Holes of suitable size (see drill chart) may be threaded for screws by means of *taps*. Either are obtainable in any standard machine-screw

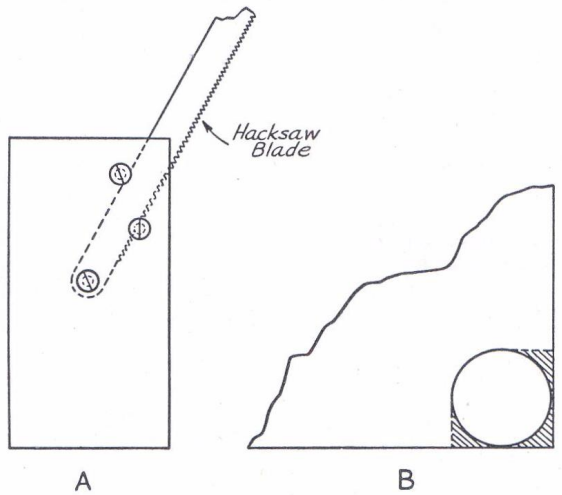

Fig. 1902 — **Cutting rectangular holes in a chassis. If the corner holes are filed out as shown in the shaded portion of B, it will be possible to start the hacksaw blade along the cutting line. A shows a single-ended handle for a hacksaw blade.**

size. A set usually consists of taps and dies for 4–36, 6–32, 8–32, 10–32 and 14–20 sizes with a suitable holder for either tap or die. The die may be started easily by filing a sharp taper or bevel on the end of the rod. In tapping a hole, extreme care should be used to prevent breaking the tap. The tap should be kept at right angles to the surface of the material and rotation should be reversed a revolution or two whenever the tap starts to turn hard. With care, holes may be tapped rapidly by clamping the tap in the chuck of the hand drill and using slow speed. Machine oil applied to the tap usually makes cutting easier and sticking less troublesome.

• CUTTING AND BENDING SHEET METAL

If a sheet of metal is too large to be conveniently cut with a hacksaw, it may be marked with scratches as deep as possible along the line of the cut on both sides of the sheet and then clamped in a vise and worked back and forth until the sheet breaks at the line. Do not carry the bending too far until the break begins to weaken, otherwise, the edge of the sheet may become bent. A pair of iron bars or pieces of heavy angle stock, as long or longer than the width of the sheet, used in the vise will make the job easier. "C" clamps may be used to keep the bars from spreading at the ends. The rough edges may be smoothed up with a file or by placing a large piece of emery cloth or sandpaper on a flat surface and running the edge of the metal back and forth over the sheet.

Bends are made similarly. The sheet should be scratched on both sides, but not too deeply.

• CLEANING AND FINISHING METAL

Parts made of aluminum may be cleaned up and given a satin finish, after all holes have been drilled, by placing them in a solution of lye for half to three-quarters of an hour. Three or four tablespoonfuls of lye should be used to each gallon of water. If more than one piece is treated in the same bath, each piece should be separated from the others so as to expose all surfaces to the solution. Overlapping of pieces may result in spots or stains.

• CRACKLE FINISH

Wood or metal parts may be given a crackle finish by applying one coat of clear Duco or Tri-Seal and allowing it to dry over night. A coat of Kem Art Metal Finish is then sprayed or put on thickly with a brush, taking care that the brush marks do not show. This should be allowed to dry for two or three hours and the part should then be baked in a household oven at 225 degrees for one and one-half hours. This will produce a regular commercial job. This finish comes in several different colors and is produced by the Sherwin-Williams Paint Co. and should be obtainable through any dealers handling Sherwin-Williams products.

• HOOK-UP WIRE

A popular type of wire for receivers and low-power transmitters is that known as "push-back" wire which comes in sizes of No. 18 or 20 which is sufficiently large for all power circuits except filament. The insulating covering, which is sufficient for circuits where voltages do not exceed 400 or 500, may be pushed back a few inches at the end making cutting of the insulation unnecessary when making a connection. Filament wires should be of sufficiently large conductor to carry the required current without appreciable voltage drop (see Wire Table, Chapter Twenty). Rubber-covered house wire sizes No. 14 to No. 10 is suitable for heavy-current transmitting tubes, while No. 18 to No. 14 flexible wire is satisfactory for receivers and low-drain transmitting tubes where the total length of wire is not excessive.

Stiff bare wire, sometimes called *bus-wire*, is most favored for the high r.f.-potential wiring of transmitters and, where practicable, in receivers. It comes in sizes No. 14 and No. 12 and is usually tin-dipped. Soft-drawn antenna wire may also be used. Kinks or bends may be removed by stretching 10 or 15 feet of the wire and then cutting into small usable lengths.

The insulation covering power wiring which will carry high transmitter voltages should be appropriate for the voltage involved. Wire with rubber and varnished cambric covering, similar to ignition cable, is usually available at radio dealers. Smaller sizes have sufficient insulation to be safe at 1000 to 1500 volts, while the more heavily insulated types should be used for voltages above 1500.

• WIRING TRANSMITTERS AND RECEIVERS

It is usually advisable to do the power-supply wiring first. The leads should be bunched together in cable form as much as possible and kept down close to the surface of the chassis. Chassis holes for wires should be lined with *rubber grommets* to fit the hole to prevent chafing of the insulation. In cases where power-supply leads have several branches, it is often convenient to use *fibre terminal strips* as anchorages. These strips also form handy mountings for wire-terminal resistors, etc. When any particular unit is provided with a nut or thumb-screw terminal, solder-lug wire terminals to fit are useful.

High-potential r.f. wiring should be well spaced from the chassis or other grounded metal surfaces and should run as directly as possible between the points to be connected

without fancy bends. When wiring balanced or push-pull circuits, care should be taken to make the r.f. wiring on each side of the circuit as symmetrical as possible. When it is necessary to pass r.f. wiring through the chassis, a *feed-through* insulator of low-loss material should be used, or the hole in the chassis should be of sufficient size to provide plenty of air space around the wire. Large-diameter rubber grommets may be used to prevent accidental short-circuit to the chassis.

By-pass condensers should be connected directly to the point to be by-passed and grounded immediately at the nearest available mounting screw, making certain that the screw makes good electrical contact with the chassis. In using tubular paper by-pass condensers, care should be taken to connect the "foil" side to ground.

Blocking and coupling condensers should be mounted well spaced from the chassis.

High-voltage wiring should be done in such a manner that exposed points are kept at a minimum and those which cannot be avoided are rendered as inaccessible as possible to accidental contact.

• SOLDERING

The secret of good soldering is in allowing time for the *joint*, not the solder, to attain sufficient temperature. Sufficient heat should be applied so that the solder will melt when it comes in contact with the wire forming the joint without the necessity for touching the solder to the iron. Soldering paste, if the non-corroding type, is extremely useful when used correctly. In general, it should not be used for radio work except when it is necessary to make the soldered joint with one hand. In this case, the joint should first be warmed slightly and the soldering paste applied with a piece of wire. Only the soldering paste which melts from the warmth of the joint should be used. If the soldering iron is clean, it will be possible to pick up a drop of solder on the tip of the iron which can be applied to the joint with one hand, while the other is used to hold the connecting wires together. The use of excessive soldering paste causes the paste to spread over the surface of adjacent insulation causing leakage or breakdown of the insulation. Except where absolutely necessary, solder should never be depended upon for the mechanical strength of the joint; the wire should be wrapped around the terminals or clamped with soldering terminals.

• CONSTRUCTION NOTES

Lockwashers should be used under nuts to prevent loosening with use, particularly when mounting tube sockets or plug-in coil receptacles subject to frequent strain.

If a control shaft must be extended or insulated, a flexible shaft coupling with adequate insulation must be used. Satisfactory support for the shaft extension may be provided by means of a *metal* panel bearing made for the purpose. Never use panel bearings of the non-metal type unless the condenser shaft is grounded. *The metal bearing should be connected to the chassis with a wire or grounding strip.* This prevents any possible danger.

• COIL WINDING

Dimensions for coils for the various units described in the constructional chapters are given under the circuit diagrams. Where no wire size is given, the power level is sufficiently low to permit the use of any available size within reason.

Unless a close-wound winding is definitely specified, the number of turns specified should be spaced out to fill the specified length on the form. The length specified should be marked on the form and holes drilled opposite the pins to which the ends of the winding are to connect. Scrape one end of the wire and pass it through the lower hole in the form to the pin to which the bottom end of the winding is to connect and solder this end fast. Unroll an amount of wire approximately sufficient to make the winding and clamp the spool in a vise so it will not turn. The wire should be pulled out straight and the winding started by turning the form in the hands and walking up toward the vise. A fair tension should be kept on the wire at all times. The spacing can be judged by eye. If, as the winding progresses, it becomes evident that the spacing is going to be incorrect to fill the required length, the winding may be started over again with a different spacing. If the spacing is only slightly off, the winding may be finished, the top end fastened and the spacing corrected by pushing each turn. When complete, the turns should be fastened permanently in place with coil cement. After a little practice, the job of determining the correct spacing will not be difficult.

Sometimes it becomes necessary to adjust the number of turns on a coil experimentally to fit a particular job. The easiest way to do this is to bring a wire out from one of the pins, extending through the hole in the form for a half-inch or so. The end of the winding may then be soldered to this extension, rather than to the pin itself, and the nuisance of repeatedly fishing the wire through to the pin avoided until the correct size of the winding has been determined.

CHAPTER TWENTY

Tube Characteristics and Miscellaneous Data

THIS CHAPTER represents a compilation of miscellaneous data useful to the practising radio amateur. The larger part of it is devoted to data on different types of transmitting and receiving vacuum tubes including typical operating conditions and base connections. The remainder of the chapter contains reference information intended to illustrate and supplement the basic material throughout the remainder of this *Handbook*.

Inductance (L)

The formula for computing the inductance of air-core radio coils is:

$$L = \frac{0.2\,A^2N^2}{3A + 9B + 10C}$$

where: L is the inductance in microhenrys
A is the mean diameter of the coil in inches
B is the length of winding in inches
C is the radial depth of winding in inches
N is the number of turns.

The quantity C may be neglected if the coil is a single-layer solenoid, as is nearly always the case with coils for high frequencies.

For example, assume a coil having 35 turns of No. 30 d.s.c. wire on a receiving coil form having a diameter of 1.5 inches. Consulting the wire table, we find that 35 turns of No. 30 d.s.c. will occupy a length of one-half inch. Therefore,

$$A = 1.5$$
$$B = .5$$
$$N = 35$$

and

$$L = \frac{0.2 \times (1.5)^2 \times (35)^2}{(3 \times 1.5) + (9 \times .5)}$$

or 61.25 microhenrys.

To calculate the number of turns of a single-layer coil for a required value of inductance:

$$N = \sqrt{\frac{3A + 9B}{0.2A^2} \times L.}$$

More rapid and convenient calculations in designing coils can be made with the ARRL *Lightning Radio Calculator* (Type A).

Condenser Capacity (C)

The formula for the capacitance of a condenser is:

$$C = 0.0088\,\frac{kA}{d}\,(n - 1)\ \mu\mu\text{fd.}$$

where: A = area of one side of plate (sq. cm.)
n = total number of plates
d = separation of plates (cm.)
k = dielectric constant of dielectric.

When A is the area of one side of one plate *in square inches* and d is the separation of the plate *in inches*,

$$C = 0.02235\,\frac{kA}{d}\,(n - 1)\ \mu\mu\text{fd.}$$

The dielectric constant determines the quantity of charge which a given separation and area of plates will accumulate for a given applied voltage. "k" is the ratio of the capacitance of a condenser with a given dielectric to its capacitance with air dielectric.

Table of Dielectric Constants

Dielectric	"k"	*Power Factor*[1]	*Puncture Voltage*[2]
Air (normal pressure)	1.0	—	19.8–22.8
Amber	2.0	0.2–0.5	—
Asphalts	2.7–3.1	2.3[3]	25–30
Bakelite — See Phenol			
Beeswax	2.9–3.2	—	—
Casein plastics[4]	6.1–6.4	5.2–6	165
Castor oil	4.3–4.7	7	380
Celluloid	4–16	5–10	—
Cellulose Acetate	6–8	3–6	600
Cellulose Nitrate	4–7	2.8–5	300
Ceresin wax	2.5–2.6	0.12–0.21	
Enamel (wire)			500–750
Fibre	5–7.5	4.5–5	150–180
Glass:			
Cobalt	7.3	0.7	—
Common window	7.6–8	1.4	200–250
Crown	6.2–7	1[3]	500
Electrical	4–5	0.5	2000
Flint	7–10	0.4	—
Nonex	4.2	0.25	—
Photographic	7.5	0.8–1	—
Plate	6.8–7.6	0.6–0.8	—
Pyrex	4.5	0.7	335
Gutta Percha	2.5–4.9	—	200–500
Lucite	2.5–3	—	—

Mica	2.5–8	0.01–0.06	—
Mica (clear India)	6.4–7.3	0.01–0.02	600–1500
Mycalex	6–8	0.2–0.3	250
Paper	2.0–2.6	—	—
Paraffin wax (solid)	1.9–2.6	0.1–0.3	300
Phenol: [5]			
Pure	5	1	—
Asbestos base	7.5	15	90–150
Black molded	5–5.5	3.5	400–500
Fabric base	5–6.5	3.5–10	150–500
Mica-filled	5–6	0.8–1	475–600
Paper base	3.8–5.5	2.5–4	650–750
Yellow	5.3–5.4	0.36–0.7	500
Polystyrene [6]	2.4–2.9	0.02	500
Porcelain (dry process)	6.2–7.5	0.7–15	40–100
Porcelain (wet process)	6.5–7	0.6	150
Pressboard (untreated)	2.9–4.5	—	125–300
Pressboard (oiled)	5	—	750
Quartz (fused)	4.2–5.1	0.03	200
Rubber (hard) [7]	2–3.5	0.5–1	450
Shellac	2.5–4	0.09	900
Steatite [8]	6.1	0.06–0.2	150–315
Titanium Dioxide [9]	90–170	0.1	—
Urea Formaldehyde resins [10]	5–7	2–4	300–400
Varnished cloth (black)	2	2	550
Varnished cloth (yellow) [11]	2.5	3	440
Vinyl resins	4	1.4–1.7	400–500
Vitrolex	6.4	0.3	—
Wood (dry oak)	2.5–6.8	3.85	—
Wood (paraffined maple)	4.1	—	115

[1] At 1 Mc.

[2] In kilovolts per inch. Most data applies to relatively thin sections and cannot be multiplied directly to give breakdown for thicker sections without added safety factor.

[3] At 1 kc.

[4] Includes such products as Aladdinite, Galalith, Erinoid, Lactoid, etc.

[5] Phenolaldehyde products include Acrolite, Bakelite, Celeron, Dielecto, Durez, Durite, Formica, Micarta, Synthane, Textolite, etc. Yellow bakelite is so-called "low-loss" bakelite.

[6] Includes Amphenol 912A, QuartzQ, Styron, Trolitul, Victron, etc.

[7] Also known as Ebonite.

[8] Soapstone — Alberene, Alsimag, Isolantite, Lava, etc.

[9] Rutile. Used in low-temperature-coefficient fixed condensers.

[10] Includes Aldur, Beetle, Plaskon, Pollopas, Prystal, etc.

[11] Includes Empire cloth.

RMA RADIO COLOR CODES

Standard color codes have been adopted by the Radio Manufacturers Association for the identification of the values and connections of standard components.

Resistors and Condensers:

For identification of resistance and capacitance values of small carbon-type resistors and midget mica condensers, numbers are represented by the following colors:

0 — Black	5 — Green
1 — Brown	6 — Blue
2 — Red	7 — Violet
3 — Orange	8 — Gray
4 — Yellow	9 — White

Three colors are used on each resistor to identify its value. The body color represents the first figure of the resistance value; one end or tip is colored to represent the second figure; a colored band or dot near the center of the resistor gives the number of zeros following the first two figures. A 25,000-ohm resistor, for example, would be marked as follows: body, red (2); tip, green (5); band, orange (3 zeros).

Small mica condensers usually are marked with three colored dots, with an arrow or other symbol indicating the sequence of colors. Readings are in micromicrofarads ($\mu\mu$fd.), with the color code as above. For example, a 0.00025-μfd. (250-$\mu\mu$fd.) condenser would be marked as follows: red (2), green (5), brown (1 zero).

I.F. Transformers:

Blue — plate lead.
Red — B + lead.
Green — grid (or diode) lead.
Black — grid (or diode) return.

NOTE: If the secondary of the i.f.t. is center-tapped, the second diode plate lead is green-and-black striped, and black is used for the center-tap lead.

A.F. Transformers:

Blue — plate (finish) lead of primary.
Red — B + lead (this applies whether the primary is plain or center-tapped).
Brown — plate (start) lead on center-tapped primaries. (Blue may be used for this lead if polarity is not important.)
Green — grid (finish) lead to secondary.
Black — grid return (this applies whether the secondary is plain or center-tapped).
Yellow — grid (start) lead on center-tapped secondaries. (Green may be used for this lead if polarity is not important.)

NOTE: These markings apply also to line-to-grid, and tube-to-line transformers.

Loudspeaker Voice Coils:

Green — finish.
Black — start.

Field Coils:

Black and red — start.
Yellow and red — finish.
Slate and Red — tap (if any).

Power Transformers

1. Primary Leads ..... *Black*
   If tapped:
   Common ..... *Black*
   Tap ..... *Black and Yellow Striped*
   Finish ..... *Black and Red Striped*
2. High-Voltage Plate Winding ..... *Red*
   Center-Tap ..... *Red and Yellow Striped*
3. Rectifier Fil. Winding ..... *Yellow*
   Center-Tap ..... *Yellow and Blue Striped*
4. Fil. Winding No. 1 ..... *Green*
   Center-Tap ..... *Green and Yellow Striped*
5. Fil. Winding No. 2 ..... *Brown*
   Center-Tap ..... *Brown and Yellow Striped*
6. Fil. Winding No. 3 ..... *Slate*
   Center-Tap ..... *Slate and Yellow Striped*

LC Constants

The product of the inductance and capacity required to resonate at a given frequency is known as the LC constant. If any value of inductance (or capacity) is divided into that constant the quotient is the capacity (or inductance) required for resonance at that frequency. The following table gives LC constants for amateur and intermediate frequencies in terms of microhenries and micromicrofarads:

Frequency Kc.	*LC Constant μh. × μμfd.*	*Frequency Mc.*	*LC Constant μh. × μμfd.*
100	2,533,030.	7.0	516.944
455	122,355.	7.3	475.399
1000	25,330.3	14.0	129.236
1600	9,894.64	14.4	122.185
1750	8,271.12	28.0	32.3090
1900	7,016.68	30.0	28.1448
2000	6,332.57	56.0	8.07726
3500	2,067.78	60.0	7.03620
4000	1,583.14	112.0	2.01931
5000	1,013.21	116.0	1.88245

For other frequencies:

$$LC = \frac{25330.3}{(\text{Freq.}_{Mc.})^2}$$

(The above data are contributed by Henry R. Hesse, W2ERY.)

Symbols for Electrical Quantities

Admittance	Y, y
Angular velocity ($2\pi f$)	ω
Capacitance	C
Conductance	G, g
Conductivity	ν
Current	I, i
Difference of potential	E, e
Dielectric constant	K or ϵ
Energy	W
Frequency	f
Impedance	Z, z
Inductance	L
Magnetic intensity	H
Magnetic flux	Φ
Magnetic flux density	B
Magnetomotive force	F
Mutual inductance	M
Number of conductors or turns	N
Permeability	μ
Phase displacement	θ or Φ
Power	P, p
Quantity of electricity	Q, q
Reactance	X, x
Reactance, Capacitive	X_c
Reactance, Inductive	X_L
Resistance	R, r
Resistivity	P
Susceptance	b
Speed of rotation	n
Voltage	E, e
Work	W

Letter Symbols for Vacuum Tube Notation

Grid potential	E_g, e_g
Grid current	I_g, i_g
Grid conductance	g_g
Grid resistance	r_g
Grid bias voltage	E_c
Plate potential	E_p, e_p
Plate current	I_b, I_p, i_p
Plate conductance	g_p
Plate resistance	r_p
Plate supply voltage	E_b
Emission current	I_s
Mutual conductance	g_m
Amplification factor	μ
Filament terminal voltage	E_f
Filament current	I_f
Grid-plate capacity	C_{gp}
Grid-cathode capacity	C_{gk}
Plate-cathode capacity	C_{pk}
Grid capacity (input)	C_g
Plate capacity (output)	C_p

NOTE. — Small letters refer to instantaneous values.

Units of Length

English	*Metric*
1 mil = 0.001 inch = 0.0254 millimeter	1 millimeter = 39.37 mils
1 inch = 2.54 centimeters	1 centimeter = 0.3937 inch = 0.0328 foot
1 foot = 30.48 centimeters	1 meter = 3.28 feet
1 yard = 0.9144 meter	= 1.094 yards
1 mile = 1.6093 kilometers	1 kilometer = 0.6214 mile
1 micron = 10^{-6} meter = 0.0001 centimeter = 10,000 Angstrom units (A°)	
1 Angstrom = 10^{-10} meter = 10^{-8} centimeter = 0.0001 micron	

Relative Electrical Conductivity of Metals at Ordinary Temperatures

(Based on Copper as 100)

Aluminum (2S; pure)	59	Iron (cast)	2–12
Aluminum (alloys):		Iron (wrought)	11.4
Soft-annealed	45–50	Lead	7
Heat-treated	30–45	Manganin	3.7
Brass	28	Mercury	1.66
Cadmium	19	Molybdenum	33.2
Chromium	55	Monel	4
Climax	1.83	Nichrome	1.45
Cobalt	16.3	Nickel	12–16
Constantin	3.24	Phosphor Bronze	36
Copper (hard drawn)	89.5	Platinum	15
Copper (annealed)	100	Silver	106
Everdur	6	Steel	3–15
German Silver (18%)	5.3	Tin	13
Gold	65	Tungsten	28.9
Iron (pure)	17.7	Zinc	28.2

Approximate relations:
An increase of 1 in A.W.G. or B. & S. wire size increases resistance 25%.
An increase of 2 increases resistance 60%.
An increase of 3 increases resistance 100%.
An increase of 10 increases resistance 10 times.

Current Capacity of Power Wiring

The National Board of Fire Underwriters has established the following as maximum current densities for commonly-used sizes of copper wire in electrical power circuits:

Gauge No. B. & S.	Circular Mil Area	Amperes	
		Rubber Insulation	Other Insulation
1	83690	100	150
2	66370	90	125
4	41740	70	90
6	26250	50	70
8	16510	35	50
10	10380	25	30
12	6530	20	25
14	4107	15	20
16	2583	6	10
18	1624	3	6

Greek Alphabet

Since Greek letters are used to stand for many electrical and radio quantities, the names and symbols of the Greek alphabet with the equivalent English characters are given.

Greek Letter	Greek Name	English Equivalent
A α	Alpha	a
B β	Beta	b
Γ γ	Gamma	g
Δ δ	Delta	d
E ϵ	Epsilon	e
Z ζ	Zeta	z
H η	Eta	é
Θ θ	Theta	th
I ι	Iota	i
K κ	Kappa	k
Λ λ	Lambda	l
M μ	Mu	m
N ν	Nu	n
Ξ ξ	Xi	x
O o	Omicron	ŏ
Π π	Pi	p
P ρ	Rho	r
Σ σ	Sigma	s
T τ	Tau	t
Υ υ	Upsilon	u
Φ ϕ	Phi	ph
X χ	Chi	ch
Ψ ψ	Psi	ps
Ω ω	Omega	ō

Multiples and Sub-Multiples

Ampere	= 1,000,000 microamperes
Ampere	= 1,000 milliamperes
Cycle	= 0.000,001 megacycle
Cycle	= 0.001 kilocycle
Farad	= 1,000,000,000,000 micromicrofarads
Farad	= 1,000,000 microfarads
Farad	= 1,000 millifarads
Henry	= 1,000,000 microhenrys
Henry	= 1,000 millihenrys
Kilocycle	= 1,000 cycles
Kilovolt	= 1,000 volts
Kilowatt	= 1,000 watts
Megacycle	= 1,000,000 cycles
Megohm	= 1,000,000 ohms
Mho	= 1,000,000 micromhos
Mho	= 1,000 millimhos
Microampere	= 0.000,001 ampere
Microfarad	= 0.000,001 farad
Microhenry	= 0.000,001 henry
Micromho	= 0.000,001 mho
Micro-ohm	= 0.000,001 ohm
Microvolt	= 0.000,001 volt
Microwatt	= 0.000,001 watt
Micromicrofarad	= 0.000,000,000,001 farad
Micromicro-ohm	= 0.000,000,000,001 ohm
Milliampere	= 0.001 ampere
Millihenry	= 0.001 henry
Millimho	= 0.001 mho
Milliohm	= 0.001 ohm
Millivolt	= 0.001 volt
Milliwatt	= 0.001 watt
Volt	= 1,000,000 microvolts
Volt	= 1,000 millivolts
Watt	= 1,000,000 microwatts
Watt	= 1,000 milliwatts
Watt	= 0.001 kilowatt

Metric Prefixes

μ	$\frac{1}{1,000,000}$	One-millionth	micro-
m	$\frac{1}{1,000}$	One-thousandth	milli-
c	$\frac{1}{100}$	One-hundredth	centi-
d	$\frac{1}{10}$	One-tenth	deci-
	1	One	uni-
dk	10	Ten	deka-
h	100	One hundred	hekto-
k	1,000	One thousand	kilo-
	10,000	Ten thousand	myria-
M	1,000,000	One million	mega-

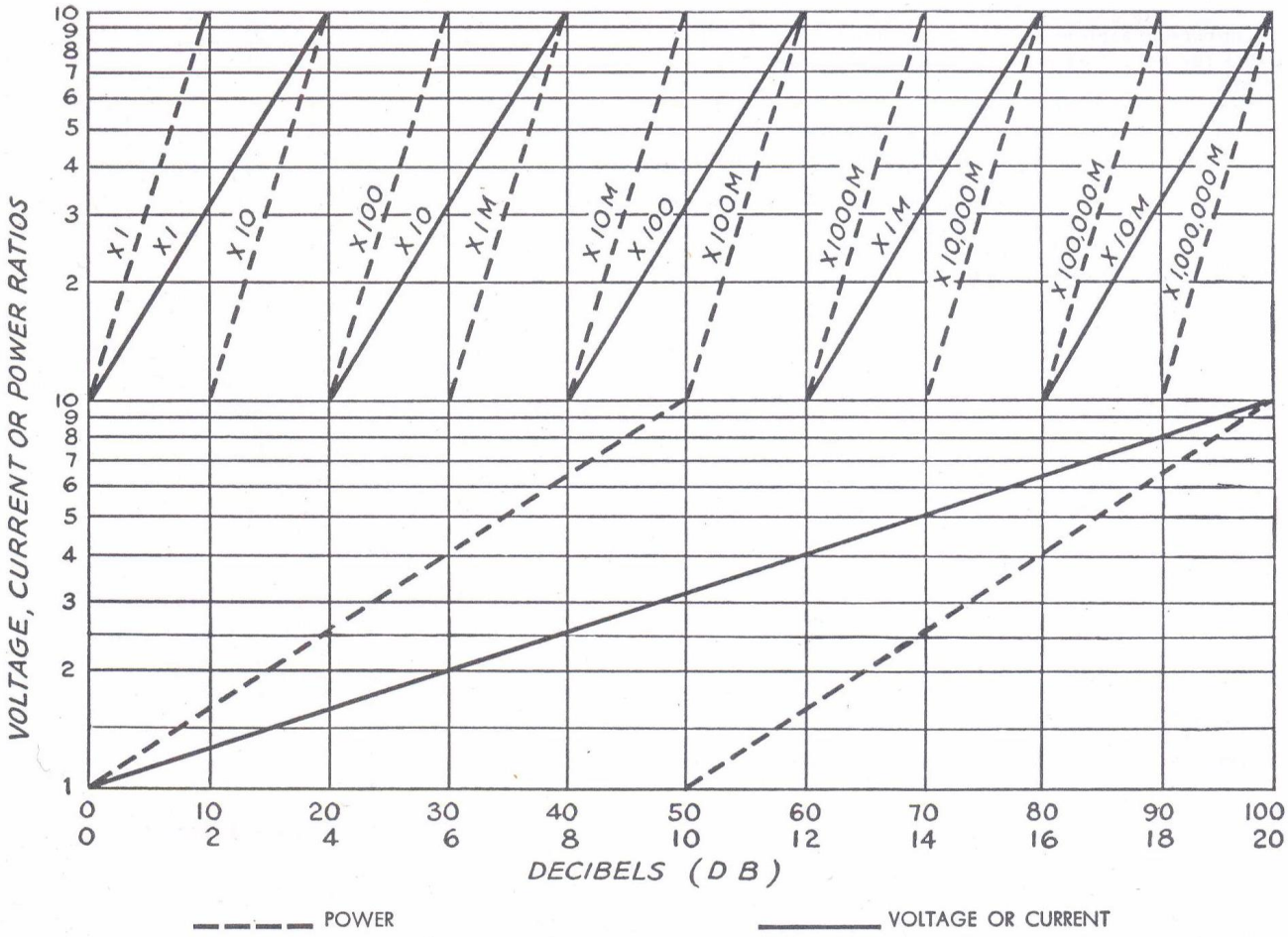

The chart above is direct-reading in terms of decibels for all power, voltage or current ratios. The top scale goes from 0 to 100 db and is useful for very large ratios; the lower scale permits closer reading between 0 and 20 db, or one cycle of the extended scale. Solid lines show voltage or current ratios; dotted lines, power ratios. To find db gain, divide output power by corresponding input power and read db value for this ratio, using the appropriate curve (i.e., " × 1" for ratios from 1 to 10, " × 10" for ratios from 10 to 100, " × 100" for ratios from 100 to 1000, and so on). To find db loss, as where output is less than input, divide input value by output value. Current and voltage ratios in db can be found similarly, provided the input and output impedances are the same. Power, voltage and current values must be in the same units (watts, millivolts, microamperes, etc.).

ABBREVIATIONS FOR ELECTRICAL AND RADIO TERMS

Alternating current	a.c.	Megohm	MΩ
Ampere (amperes)	a.	Meter	m.
Antenna	ant.	Microfarad	μfd.
Audio frequency	a.f.	Microhenry	μh.
Centimeter	cm.	Micromicrofarad	μμfd.
Continuous waves	c.w.	Microvolt	μv.
Cycles per second	c.p.s.	Microvolt per meter	μv/m.
Decibel	db.	Microwatt	μw.
Direct current	d.c.	Milliampere	ma.
Electromotive force	e.m.f.	Millivolt	mv.
Frequency	f.	Milliwatt	mw.
Ground	gnd.	Modulated continuous waves	m.c.w.
Henry	h.	Ohm	Ω
High frequency	h.f.	Power	P.
Intermediate frequency	i.f.	Power factor	p.f.
Interrupted continuous waves	i.c.w.	Radio frequency	r.f.
Kilocycles (per second)	kc.	Ultra-high frequency	u.h.f.
Kilowatt	kw.	Volt (volts)	v.
Megacycle (per second)	Mc.	Watt (watts)	w.

Conversion factors for power amplifier triodes and pentodes. Using the operating conditions shown in the tube data tables on pages 390–419, equivalent conditions involving special plate voltage requirements can be determined. To use these curves, first determine the ratio of the new plate voltage to that shown in the table. This ratio, the voltage conversion factor (F_e), is then used to determine the new screen- and control-grid voltages and the other significant characteristics for the new operating condition. The accuracy is sufficiently good for voltage changes not exceeding 2.5 to 1. All voltages must be changed in proportion; if only grid or plate voltage is changed the relationships will not hold.

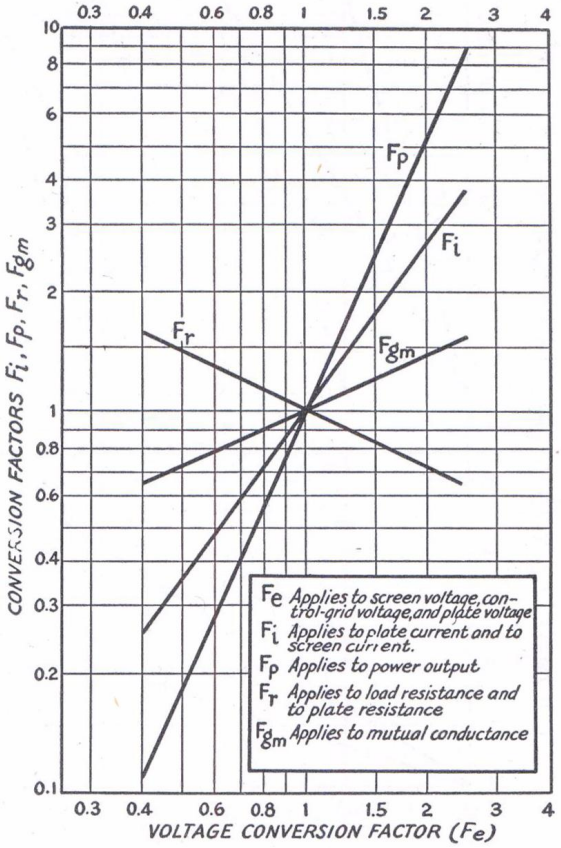

By use of the reactance chart (below), the approximate reactance of any capacity from 1.0 $\mu\mu$fd. to 10 μfd. at any frequency from 100 cycles to 100 megacycles can be read directly. The reactance of inductances from 0.1 microhenry to 1.0 henry can also be read. Intermediate values can be estimated by interpolation. In making interpolations remember that the rate of change between lines is logarithmic. Use the frequency or reactance scales as a guide in estimating intermediate values on the capacity or inductance scales.

This chart can also be used to find the approximate resonance frequencies of LC combinations or the frequency to which a given coil and condenser will tune. First locate the respective slanting lines for the capacity and inductance. The point where they intersect, i.e., where the reactances are equal, is the resonant frequency (projected downward and read on the frequency scale).

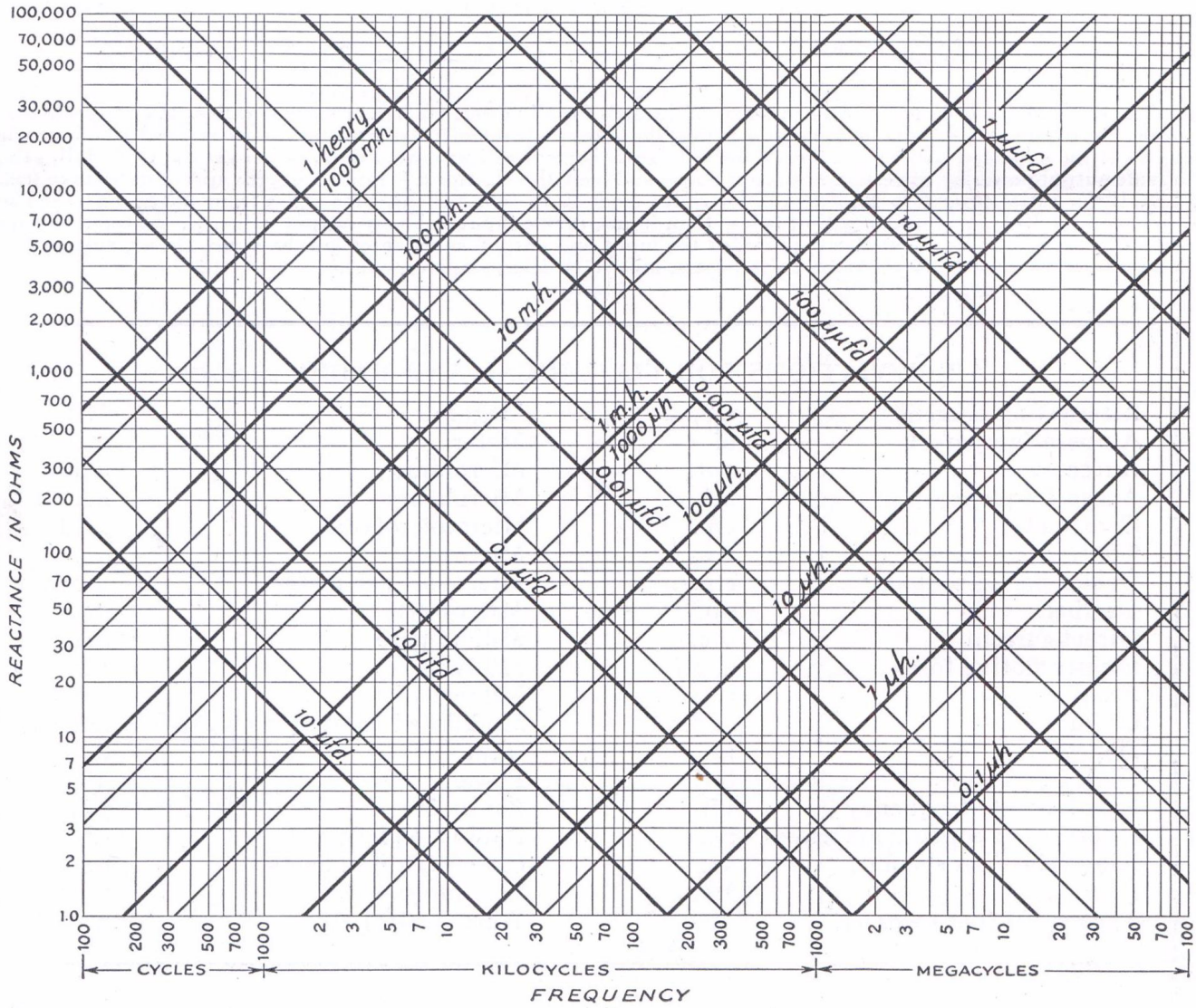

COPPER WIRE TABLE

Gauge No. B. & S.	Diam. in Mils [1]	Circular Mil Area	Turns per Linear Inch [2]				Turns per Square Inch [2]			Feet per Lb.		Ohms per 1000 ft. 25° C.	Current Carrying Capacity at 1500 C.M. per Amp.[3]	Diam. in mm.	Nearest British S.W.G. No.
			Enamel	S.C.C.	D.S.C. or S.C.C.	D.C.C.	S.C.C.	Enamel S.C.C.	D.C.C.	Bare	D.C.C.				
1	289.3	83690	—	—	—	—	—	—	—	3.947	—	.1264	55.7	7.348	1
2	257.6	66370	—	—	—	—	—	—	—	4.977	—	.1593	44.1	6.544	3
3	229.4	52640	—	—	—	—	—	—	—	6.276	—	.2009	35.0	5.827	4
4	204.3	41740	—	—	—	—	—	—	—	7.914	—	.2533	27.7	5.189	5
5	181.9	33100	—	—	—	—	—	—	—	9.980	—	.3195	22.0	4.621	7
6	162.0	26250	—	—	—	—	—	—	—	12.58	—	.4028	17.5	4.115	8
7	144.3	20820	—	—	—	—	—	—	—	15.87	—	.5080	13.8	3.665	9
8	128.5	16510	7.6	—	7.4	7.1	—	—	—	20.01	19.6	.6405	11.0	3.264	10
9	114.4	13090	8.6	—	8.2	7.8	—	—	—	25.23	24.6	.8077	8.7	2.906	11
10	101.9	10380	9.6	—	9.3	8.9	87.5	84.8	80.0	31.82	30.9	1.018	6.9	2.588	12
11	90.74	8234	10.7	—	10.3	9.8	110	105	97.5	40.12	38.8	1.284	5.5	2.305	13
12	80.81	6530	12.0	—	11.5	10.9	136	131	121	50.59	48.9	1.619	4.4	2.053	14
13	71.96	5178	13.5	—	12.8	12.0	170	162	150	63.80	61.5	2.042	3.5	1.828	15
14	64.08	4107	15.0	—	14.2	13.8	211	198	183	80.44	77.3	2.575	2.7	1.628	16
15	57.07	3257	16.8	—	15.8	14.7	262	250	223	101.4	97.3	3.247	2.2	1.450	17
16	50.82	2583	18.9	18.9	17.9	16.4	321	306	271	127.9	119	4.094	1.7	1.291	18
17	45.26	2048	21.2	21.2	19.9	18.1	397	372	329	161.3	150	5.163	1.3	1.150	18
18	40.30	1624	23.6	23.6	22.0	19.8	493	454	399	203.4	188	6.510	1.1	1.024	19
19	35.89	1288	26.4	26.4	24.4	21.8	592	553	479	256.5	237	8.210	.86	.9116	20
20	31.96	1022	29.4	29.4	27.0	23.8	775	725	625	323.4	298	10.35	.68	.8118	21
21	28.46	810.1	33.1	32.7	29.8	26.0	940	895	754	407.8	370	13.05	.54	.7230	22
22	25.35	642.4	37.0	36.5	34.1	30.0	1150	1070	910	514.2	461	16.46	.43	.6438	23
23	22.57	509.5	41.3	40.6	37.6	31.6	1400	1300	1080	648.4	584	20.76	.34	.5733	24
24	20.10	404.0	46.3	35.3	41.5	35.6	1700	1570	1260	817.7	745	26.17	.27	.5106	25
25	17.90	320.4	51.7	50.4	45.6	38.6	2060	1910	1510	1031	903	33.00	.21	.4547	26
26	15.94	254.1	58.0	55.6	50.2	41.8	2500	2300	1750	1300	1118	41.62	.17	.4049	27
27	14.20	201.5	64.9	61.5	55.0	45.0	3030	2780	2020	1639	1422	52.48	.13	.3606	29
28	12.64	159.8	72.7	68.6	60.2	48.5	3670	3350	2310	2067	1759	66.17	.11	.3211	30
29	11.26	126.7	81.6	74.8	65.4	51.8	4300	3900	2700	2607	2207	83.44	.084	.2859	31
30	10.03	100.5	90.5	83.3	71.5	55.5	5040	4660	3020	3287	2534	105.2	.067	.2546	33
31	8.928	79.70	101	92.0	77.5	59.2	5920	5280	—	4145	2768	132.7	.053	.2268	34
32	7.950	63.21	113	101	83.6	62.6	7060	6250	—	5227	3137	167.3	.042	.2019	36
33	7.080	50.13	127	110	90.3	66.3	8120	7360	—	6591	4697	211.0	.033	.1798	37
34	6.305	39.75	143	120	97.0	70.0	9600	8310	—	8310	6168	266.0	.026	.1601	38
35	5.615	31.52	158	132	104	73.5	10900	8700	—	10480	6737	335.0	.021	.1426	38–39
36	5.000	25.00	175	143	111	77.0	12200	10700	—	13210	7877	423.0	.017	.1270	39–40
37	4.453	19.83	198	154	118	80.3	—	—	—	16660	9309	533.4	.013	.1131	41
38	3.965	15.72	224	166	126	83.6	—	—	—	21010	10666	672.6	.010	.1007	42
39	3.531	12.47	248	181	133	86.6	—	—	—	26500	11907	848.1	.008	.0897	43
40	3.145	9.88	282	194	140	89.7	—	—	—	33410	14222	1069	.006	.0799	44

[1] A mil is 1/1000 (one thousandth) of an inch.
[2] The figures given are approximate only, since the thickness of the insulation varies with different manufacturers.
[3] The current-carrying capacity at 1000 C.M. per ampere is equal to the circular-mil area (Column 3) divided by 1000.

SCHEMATIC SYMBOLS USED IN CIRCUIT DIAGRAMS

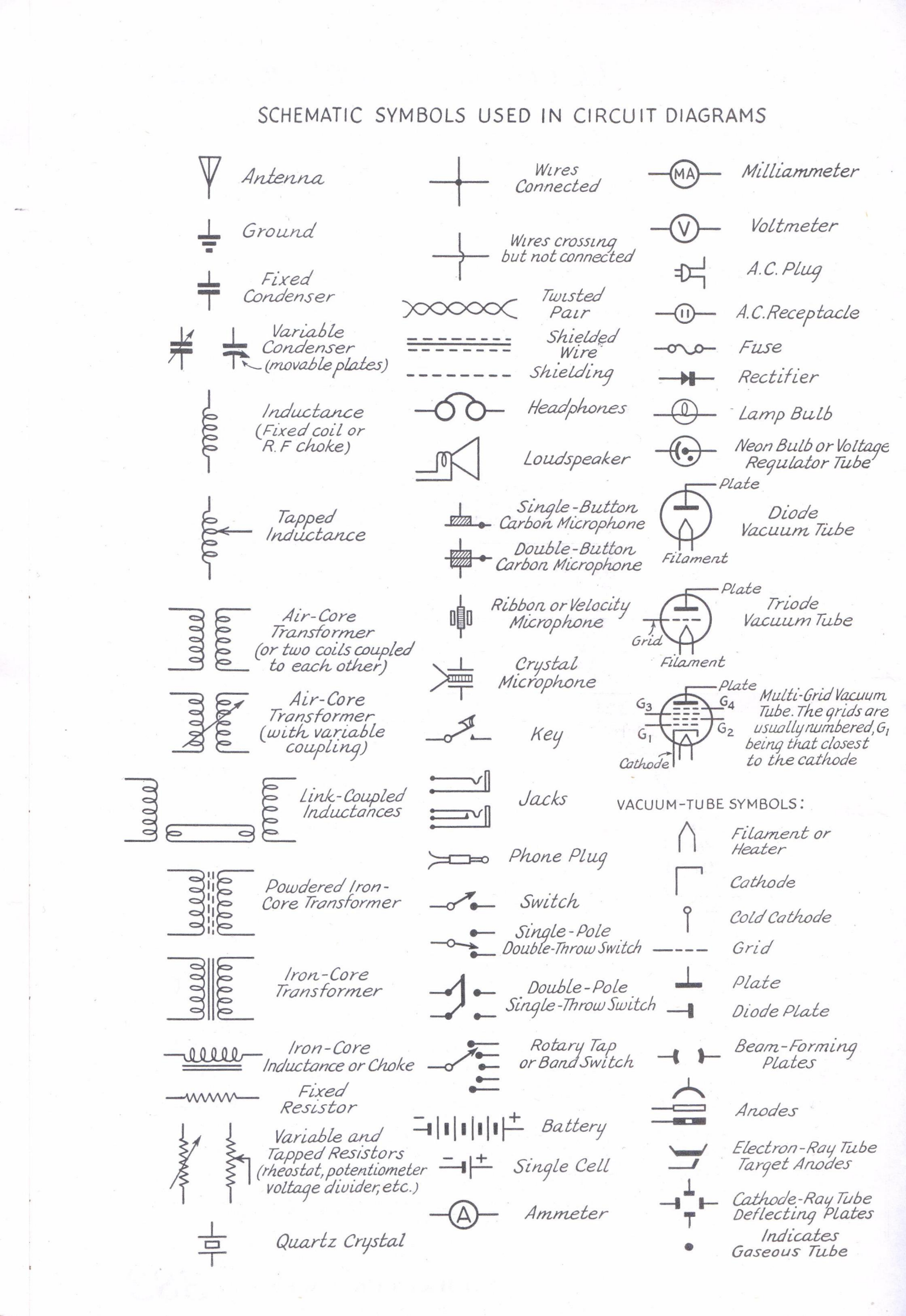

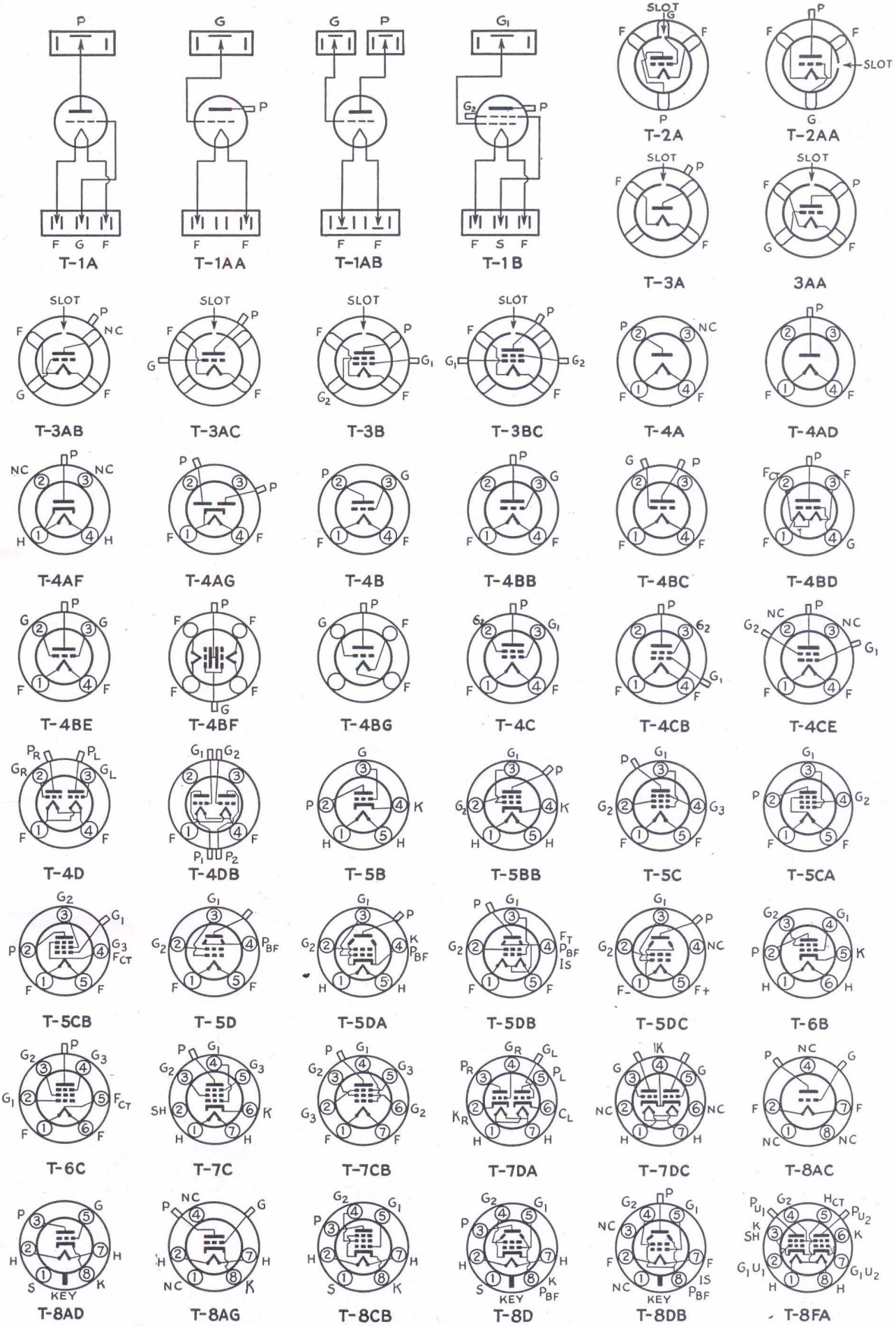

TRANSMITTING TUBE DIAGRAMS

Bottom views are shown. Terminal designations on sockets are as follows:

BP	= Bayonet Pin	IC	= Internal Connection
F	= Filament	P	= Plate (Anode)
G	= Grid	P_{BF}	= Beam-Forming Plates
H	= Heater	S	= Shell
K	= Cathode	SH	= Internal Shield
NC	= No Connection	U	= Unit

Alphabetical subscripts D, P, T and HX indicate, respectively, diode unit, pentode unit, triode unit or hexode unit in multi-unit types. Subscript T or CT indicates filament or heater tap.

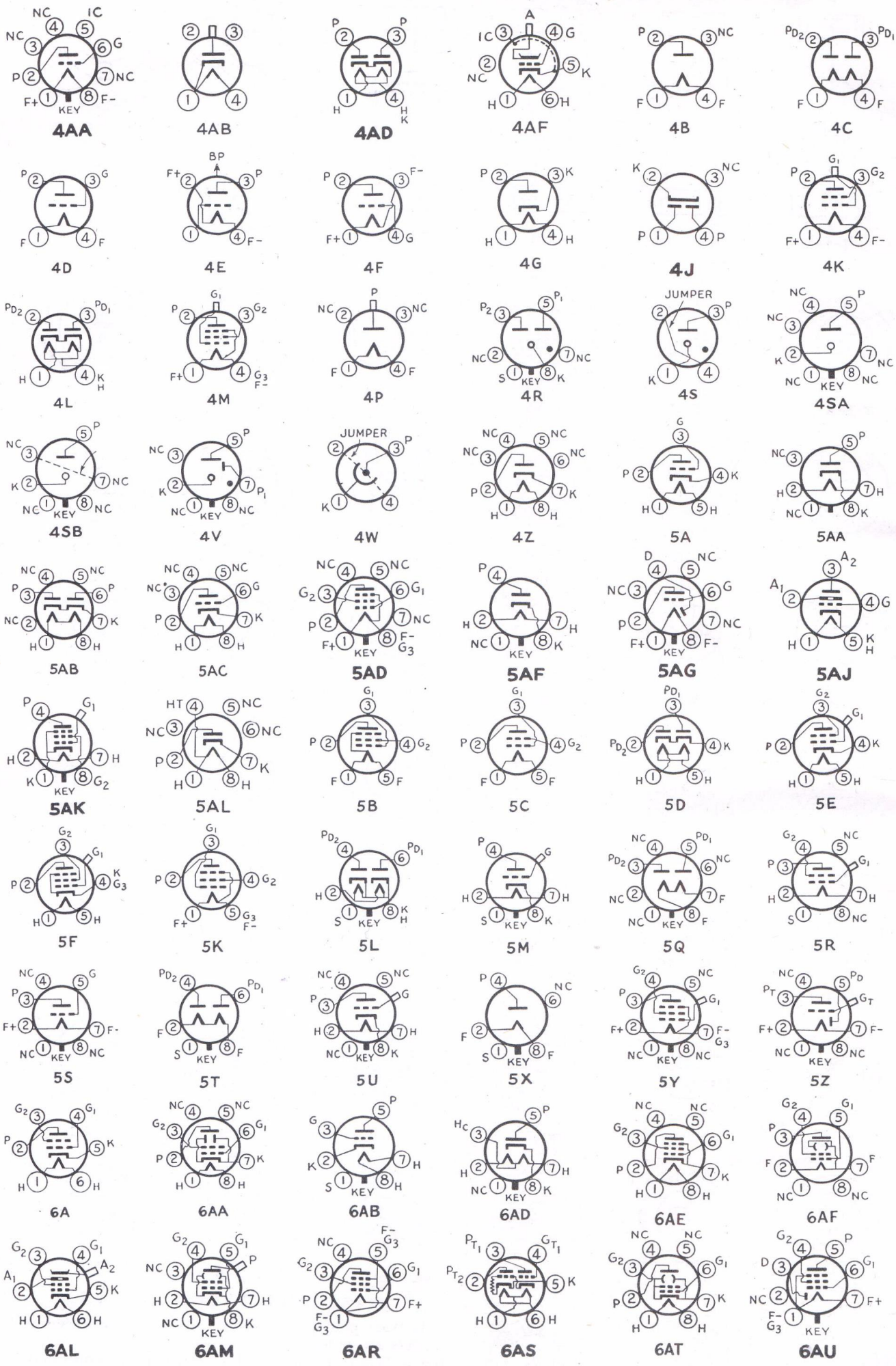

RECEIVING TUBE DIAGRAMS

Bottom views are shown. Terminal designations on sockets are as follows:

BP = Bayonet Pin	IC = Internal Connection	P = Plate (Anode)	S = Shell
F = Filament	IS = Internal Shield	P_1 = Starter-Anode	TA = Target
G = Grid	K = Cathode	PBF = Beam-Forming Plates	● = Gas-Type Tube
H = Heater	NC = No Connection	RC = Ray-Control Electrode	U = Unit

Alphabetical subscripts D, P, T and HX indicate, respectively, diode unit, pentode unit, triode unit or hexode unit in multi-unit types. Subscript T or CT indicates filament or heater tap.

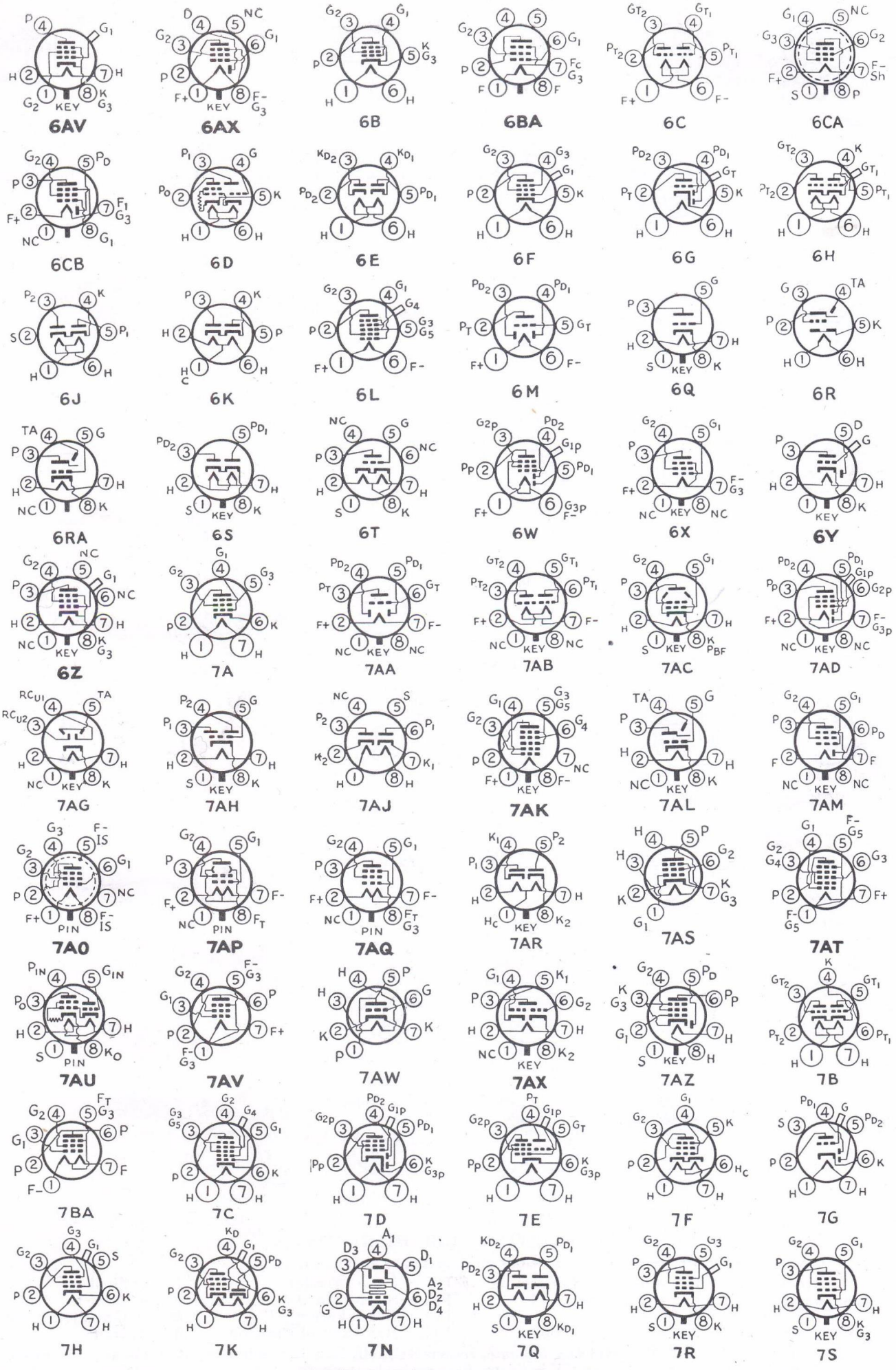

RECEIVING TUBE DIAGRAMS

Bottom views are shown. Terminal designations on sockets are as follows:

BP = Bayonet Pin	IC = Internal Connection	P = Plate (Anode)	S = Shell
F = Filament	IS = Internal Shield	P_1 = Starter-Anode	TA = Target
G = Grid	K = Cathode	P_{BF} = Beam-Forming Plates	● = Gas-Type Tube
H = Heater	NC = No Connection	RC = Ray-Control Electrode	U = Unit

Alphabetical subscripts D, P, T and HX indicate, respectively, diode unit, pentode unit, triode unit or hexode unit in multi-unit types. Subscript T or CT indicates filament or heater tap.



RECEIVING TUBE DIAGRAMS

Bottom views are shown. Terminal designations on sockets are as follows:

BP = Bayonet Pin	IC = Internal Connection	P = Plate (Anode)	S = Shell
F = Filament	IS = Internal Shield	P_1 = Starter-Anode	TA = Target
G = Grid	K = Cathode	P_{BF} = Beam-Forming Plates	● = Gas-Type Tube
H = Heater	NC = No Connection	RC = Ray-Control Electrode	U = Unit

Alphabetical subscripts D, P, T and HX indicate, respectively, diode unit, pentode unit, triode unit or hexode unit in multi-unit types. Subscript T or CT indicates filament or heater tap.

SOCKET CONNECTIONS FOR ACORN TUBES

Bottom views — looking at short end.

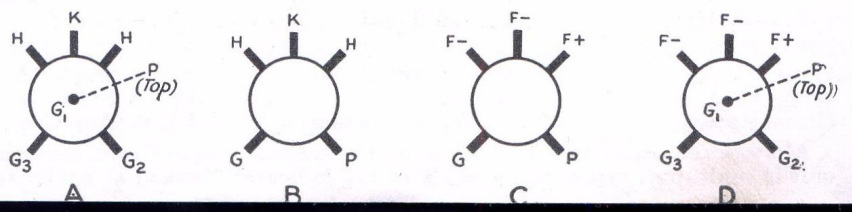

STANDARD METAL GAUGES

Gauge No.	American or B. & S.[1]	U. S. Standard[2]	Birmingham or Stubs[3]
1	.2893	.28125	.300
2	.2576	.265625	.284
3	.2294	.25	.259
4	.2043	.234375	.238
5	.1819	.21875	.220
6	.1620	.203125	.203
7	.1443	.1875	.180
8	.1285	.171875	.165
9	.1144	.15625	.148
10	.1019	.140625	.134
11	.09074	.125	.120
12	.08081	.109375	.109
13	.07196	.09375	.095
14	.06408	.078125	.083
15	.05707	.0703125	.072
16	.05082	.0625	.065
17	.04526	.05625	.058
18	.04030	.05	.049
19	.03589	.04375	.042
20	.03196	.0375	.035
21	.02846	.034375	.032
22	.02535	.03125	.028
23	.02257	.028125	.025
24	.02010	.025	.022
25	.01790	.021875	.020
26	.01594	.01875	.018
27	.01420	.0171875	.016
28	.01264	.015625	.014
29	.01126	.0140625	.013
30	.01003	.0125	.012
31	.008928	.0109375	.010
32	.007950	.01015625	.009
33	.007080	.009375	.008
34	.006350	.00859375	.007
35	.005615	.0078125	.005
36	.005000	.00703125	.004
37	.004453	.006640625	....
38	.003965	.00625	....
39	.003531	.....	....
40	.003145	.....	....

[1] Used for aluminum, copper, brass and non-ferrous alloy sheets, wire and rods.

[2] Used for iron, steel, nickel and ferrous alloy sheets, wire and rods.

[3] Used for seamless tubes; also by some manufacturers for copper and brass.

DECIMAL EQUIVALENT OF FRACTIONS

1/32	.03125	17/32	.53125
1/16	.0625	9/16	.5625
3/32	.09375	19/32	.59375
1/8	.125	5/8	.625
5/32	.15625	21/32	.65625
3/16	.1875	11/16	.6875
7/32	.21875	23/32	.71875
1/4	.25	3/4	.75
9/32	.28125	25/32	.78125
5/16	.3125	13/16	.8125
11/32	.34375	27/32	.84375
3/8	.375	7/8	.875
13/32	.40625	29/32	.90625
7/16	.4375	15/16	.9375
15/32	.46875	31/32	.96875
1/2	.5	1	1.0

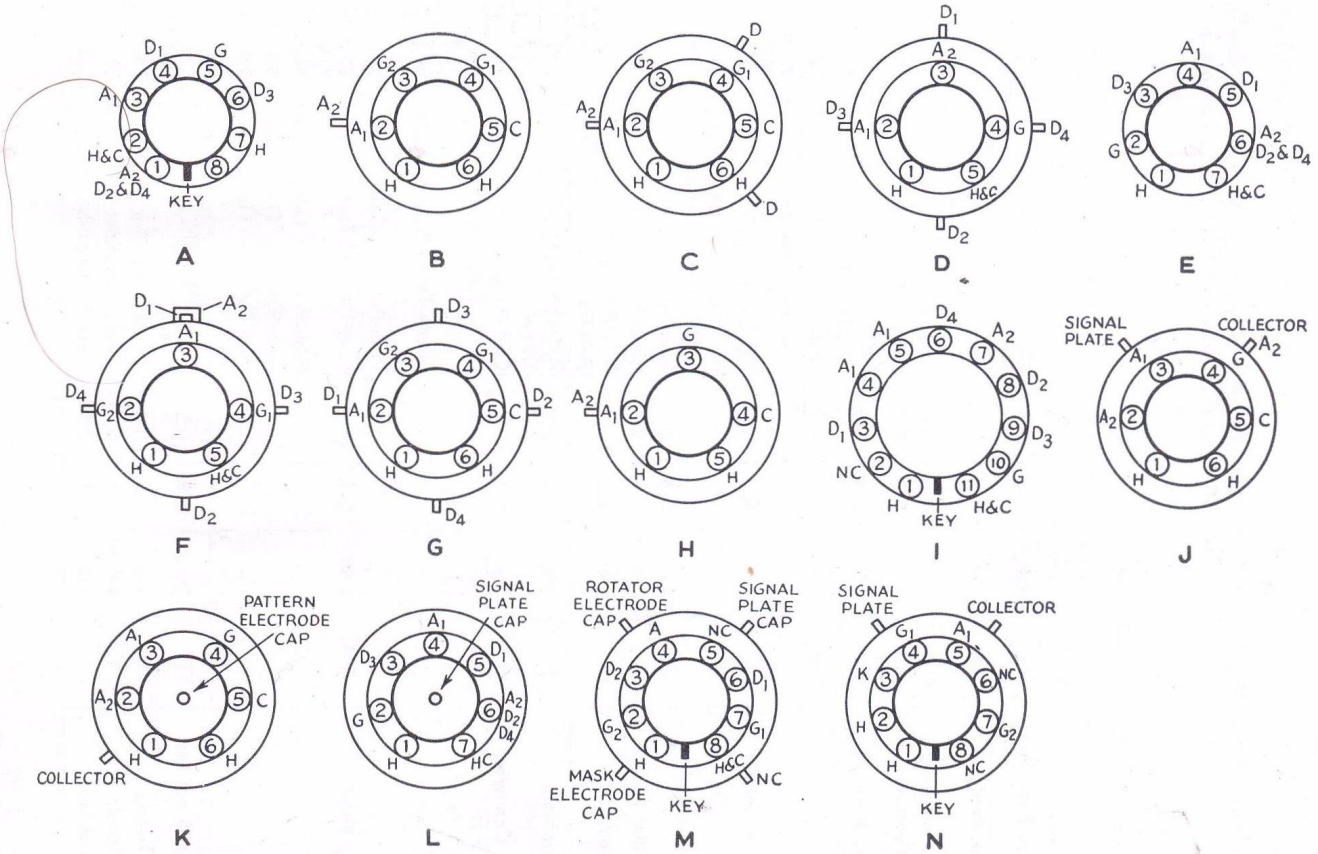

SOCKET CONNECTIONS FOR CATHODE-RAY TUBES

H denotes heater, C cathode, G grid, A anode, D deflecting plate, COLL collector. Inner rings of base diagram indicate socket connections; connections on outer ring indicate bulb cap-type terminals. Views are from bottoms of tubes. In Diagrams J and N, signal plate cap and collector cap are located on bulb behind mosaic.

TABLE I — METAL RECEIVING TUBES

Characteristics given in this table apply to all tubes having type numbers shown, including metal tubes, glass tubes with "G" suffix, and bantam tubes with "GT" suffix. For "G" and "GT" tubes not listed (not having metal counterparts), see Tables II, VII, VIII and IX.

Type	Name	Socket Connections [1]	Cathode	Fil. or Heater Volts	Fil. or Heater Amps.	Use	Plate Supply Volts	Grid Bias	Screen Volts	Screen Current Ma.	Plate Current Ma.	Plate Resistance, Ohms	Transconductance Micromhos	Amp. Factor	Load Resistance Ohms	Power Output Watts	Type
6A8	Pentagrid Converter	8A	Htr.	6.3	0.3	Osc.-Mixer	250	— 3.0	100	3.2	3.3	Anode-grid (No. 2) 250 volts max. thru 20,000-ohms					6A8
6AB7 1853	Television Amp. Pentode	8N	Htr.	6.3	0.45	Class-A Amplifier	300	— 3.0	200 [2]	3.2	12.5	700000	5000	3500	—	—	6AB7 1853
6AC7 1852	Television Amp. Pentode	8N	Htr.	6.3	0.45	Class-A Amplifier	300	— 2.0 [4]	150 [2]	2.5	10	750000	9000	6750	—	—	6AC7 1852
6AG7	Video Beam Power Amp.	8Y	Htr.	6.3	0.65	Class-A_1 Amplifier [5]	250	— 2.0	140	8.5	33	100000	7700	—	1700	—	6AG7
6B8	Duplex-Diode Pentode	8E	Htr.	6.3	0.3	Class-A Amplifier	250	— 3.0	125	2.3	9.0	650000	1125	730	—	—	6B8
6C5	Triode Detector, Amplifier	6Q	Htr.	6.3	0.3	Class-A Amplifier	250	— 8.0	—	—	8.0	10000	2000	20	—	—	6C5
						Bias Detector	250	—17.0	—	—	Plate current adjusted to 0.2 ma. with no signal						
6F5	High-μ Triode	5M	Htr.	6.3	0.3	Class-A Amplifier	250	— 1.3	—	—	0.2	66000	1500	100	—	—	6F5
6F6	Pentode Power Amplifier	7S	Htr.	6.3	0.7	Class-A Pentode	250	—16.5	250	6.5	34	80000	2500	200	7000	3.0	6F6
							315	—22.0	315	8.0	42	75000	2650	200	7000	5.0	
						Class-A Triode [3]	250	—20.0	—	—	31	2600	2700	7.0	4000	0.85	
						Push-Pull Class-AB Pentode Triode Connection [3]	375	—26.0	250	2.5	17	Power output for 2 tubes at stated load, plate-to-plate			10000	19.0	
							350	—38.0	—	—	22.5				6000	18.0	
6H6	Twin Diode	7Q	Htr.	6.3	0.3	Rectifier	Max. a.c. voltage per plate = 100 r.m.s. Max. output current 4.0 ma. d.c.										6H6
6J5	Detector Amplifier Triode	6Q	Htr.	6.3	0.3	Class-A Amplifier	250	— 8.0	—	—	9	7700	2600	20	—	—	6J5
6J7	Triple-Grid Detector, Amplifier	7R	Htr.	6.3	0.3	R.F. Amplifier	250	— 3.0	100	0.5	2.0	1.5 meg.	1225	1500	—	—	6J7
						Bias Detector	250	— 4.3	100	Cathode current 0.43 ma.			—	—	0.5 meg.	—	
6K7	Triple-Grid Variable-μ Amplifier	7R	Htr.	6.3	0.3	R.F. Amplifier	250	— 3.0	125	2.6	10.5	600000	1650	990	—	—	6K7
						Mixer	250	—10.0	100	—	—	—	Oscillator peak volts = 7.0				
6K8	Triode Hexode Converter	8K	Htr.	6.3	0.3	Osc.-Mixer	250	— 3.0	100	6	2.5	Triode Plate (No. 2) 100 volts, 3.8 ma.					6K8
6L6	Beam Power Amplifier	7AC	Htr.	6.3	0.9	Single-Tube A_1 [6] Cathode Bias	250	— [7]	250	5.4–7.2	75–78	—	—	—	2500	6.5	6L6
							300	— [8]	200	3.0–4.6	51–54.5	—	—	—	4500	6.5	
						Single-Tube A_1 [6] Fixed Bias	250	—14.0	250	5.0–7.3	72–79	22500	6000	—	2500	6.5	
							350	—18.0	250	2.5–7.0	54–66	33000	5200	—	4200	10.8	
						Push-Pull A_1 [6] Cathode Bias	270	— [9]	270	11–17	134–145	—	—	—	5000	18.5	
						Push-Pull A_1 [6] Fixed Bias	250	—16.0	250	10–16	120–140	24500	5500	—	5000	14.5	
							270	—17.5	270	11–17	134–155	23500	5700	—	5000	17.5	
						Push-Pull AB_1 [6] Cathode Bias	360	— [10]	270	5–17	88–100	Power output for 2 tubes. Load plate-to-plate			9000	24.5	
						Push-Pull AB_1 [6] Fixed Bias	360	—22.5	270	5–15	88–132				6600 [11]	26.5	
						Push-Pull AB_2 [6] Fixed Bias	360	—18.0	225	3.5–11	78–142				6000	31.0	
							360	—22.5	270	5–16	88–205				3800	47.0	
6L7	Pentagrid Mixer Amplifier	7T	Htr.	6.3	0.3	R.F. Amplifier	250	— 3.0	100	5.5	5.3	800000	1100	—	—	—	6L7
						Mixer	250	— 6.0	150	8.3	3.3	Over 1 meg.	Oscillator-grid (No. 3) voltage = —15.0				
6Q7	Duplex-Diode Triode	7V	Htr.	6.3	0.3	Triode Amplifier	250	— 3.0	—	—	1.1	58000	1200	70	—	—	6Q7
6R7	Duplex-Diode Triode	7V	Htr.	6.3	0.3	Triode Amplifier	250	— 9.0	—	—	9.5	8500	1900	16	10000	0.28	6R7
6S7	Triple-Grid Variable-μ	7R	Htr.	6.3	0.15	Class-A Amplifier	250	— 3.0	100	2.0	8.5	1000000	1750	1750	—	—	6S7

TABLE I—METAL RECEIVING TUBES—*Continued*

Type	Name	Socket Connections [1]	Cathode	Fil. or Heater Volts	Fil. or Heater Amps.	Use	Plate Supply Volts	Grid Bias	Screen Volts	Screen Current Ma.	Plate Current Ma.	Plate Resistance, Ohms	Transconductance Micromhos	Amp. Factor	Load Resistance Ohms	Power Output Watts	Type
6SA7	Pentagrid Converter	8R [12]	Htr.	6.3	0.3	Osc.-Mixer	250	0 [13]	100	8.0	3.4	800000	Grid No. 1 Resistor 20000 ohms				6SA7
6SC7	Twin Triode Amplifier	8S	Htr.	6.3	0.3	Class-A Amplifier	250	− 2.0	—	—	2.0	53000	1325	70	—	—	6SC7
6SF5	High-μ Triode	6AB	Htr.	6.3	0.3	Class-A Amplifier	250	− 2.0	—	—	0.9	66000	1500	100	—	—	6SF5
6SF7	Diode Variable-μ Pentode	7AZ	Htr.	6.3	0.3	Class-A Amplifier	250	− 1.0	100	3.3	12.4	700000	2050	—	—	—	6SF7
6SG7	Triple-Grid Semi-Variable-μ	8BC	Htr.	6.3	0.3	H. F. Amplifier	250	− 2.5	150	3.4	9.2	Over 1 meg.	4000	—	—	—	6SG7
6SH7	Triple-Grid Amplifier	8BK	Htr.	6.3	0.3	H. F. Amplifier	250	− 1.0	150	4.1	10.8	900000	4900	—	—	—	6SH7
6SJ7	Triple-Grid Amplifier	8N	Htr.	6.3	0.3	Class-A Amplifier	250	− 3.0	100	0.8	3	1500000	1650	2500	—	—	6SJ7
6SK7	Triple-Grid Variable-μ	8N	Htr.	6.3	0.3	Class-A Amplifier	250	− 3.0	100	2.4	9.2	800000	2000	1600	—	—	6SK7
6SQ7	Duplex-Diode Triode	8Q	Htr.	6.3	0.3	Class-A Amplifier	250	− 2.0	—	—	0.8	91000	1100	100	—	—	6SQ7
6SR7	Duplex-Diode Triode	8Q	Htr.	6.3	0.3	Class-A Amplifier	250	− 9.0	—	—	9.5	8500	1900	16	—	—	6SR7
6SS7	Triple-Grid Variable-μ	8N	Htr.	6.3	0.15	Class-A Amplifier	250	− 3.0	100	2.0	9.0	1000000	1850	—	—	—	6SS7
6T7	Duplex-Diode Triode	7V	Htr.	6.3	0.15	Class-A Amplifier	250	− 3.0	—	—	1.2	62000	1050	65	—	—	6T7
6V6	Beam Power Amplifier	7AC	Htr.	6.3	0.45	Class-A Amplifier	250	−12.5	250	4.5/7.0	45–47	52000	4100	218	5000	4.5	6V6
						Class-AB Amplifier 2 Tubes	250	−15.0	250	5/13	70–79	60000	3750	—	10000	10.0	
							285	−19.0	285	4/13.5	70–92	65000	3600	—	8000	14.0	
1611	Pentode Power Amplifier	7S	Htr.	6.3	0.7	Relay Tube	Characteristics same as 6F6										1611
1612	Pentagrid Amplifier	7T	Htr.	6.3	0.3	Class-A Amplifier	250	− 3.0	100	6.5	5.3	800000	1100	880	—	—	1612
1620	Triple-Grid Det.-Amp.	7R	Htr.	6.3	0.3	Class-A Amplifier	Characteristics same as 6J7										1620
1621	Power Amplifier Pentode [3]	7S	Htr.	6.3	0.7	Class-A, Pentode P. P.	300	−30.0	300	6.5/13	38/69	—	—	—	4000	5.0	1621
						Class-A Triode [3] P. P.	327.5	−27.5 [14]	—	—	55/59	—	—	—	5000	2.0	
1622	Beam Power Amplifier	7AC	Htr.	6.3	0.9	Class-A Amplifier	300	−20.0	250	4/10.5	86/125	—	—	—	4000	10.0	1622
1851	Television Amp. Pentode	7R	Htr.	6.3	0.45	Class-A Amplifier	300	− 2.0 [4]	150 [2]	2.5	10	750000	9000	6750	—	—	1851

[1] See Receiving Tube Diagrams.
[2] From fixed screen supply. If series resistor from plate supply is used, value for 6AB7/1853 is 30,000 ohms, for 6AC7/1852 and 1851 60,000 ohms. Series resistor gives variable-μ characteristic, fixed screen supply gives sharp cut-off.
[3] Screen tied to plate.
[4] Cathode bias resistor should be adjusted for plate current of 10 ma.; minimum value 160 ohms.
[5] Typical operation for 4-Mc. bandwidth video voltage amplifier; 70 volts output with 4 volts input.
[6] Subscript 1 indicates no grid-current flow. Subscript 2 indicates grid-current flow over part of input cycle.
[7] Cathode resistor 170 ohms.
[8] Cathode resistor 220 ohms.
[9] Cathode resistor 125 ohms.
[10] Cathode resistor 250 ohms.
[11] Output 18 watts with 3800-ohm load.
[12] For 6SA7GT, use Base Diagram 8AD.
[13] Grid bias −2 volts if separate oscillator excitation is used.
[14] Cathode resistor 500 ohms.

TABLE II—6.3-VOLT GLASS TUBES WITH OCTAL BASES

(For "G" and "GT" -Type Tubes Not Listed Here, See Equivalent Type in Table I; Characteristics and Connections Will Be Identical)

Type	Name	Socket Connections [1]	Cathode	Fil. or Heater Volts	Fil. or Heater Amps.	Use	Plate Supply Volts	Grid Bias	Screen Volts	Screen Current Ma.	Plate Current Ma.	Plate Resistance, Ohms	Transconductance Micromhos	Amp. Factor	Load Resistance Ohms	Power Output Watts	Type
6A5G	Triode Power Amplifier	6T	Htr.	6.3	1.0	Class-A Amplifier	250	−45.0	—	—	60	800	5250	4.2	2500	3.75	6A5G
						Push-Pull Class AB	325	−68.0	—	—	80 [2]	—		—	3000	15.0	
						Push-Pull Class AB	325	850 Ohm Cathode Resistor			80 [2]	—		—	5000	10.0	
6AB6G	Direct-Coupled Amplifier	7W	Htr.	6.3	0.5	Class-A Amplifier	250	0	Input		5.0	40000	1800	72	8000	3.5	6AB6G
							250	0	Output		34						
6AC5G	High-μ Power Amplifier Triode	6Q	Htr.	6.3	0.4	Push-Pull Class-B	250	0	—	—	5.0 [2]	36700	3400	125	10000	8.0	6AC5G
						Dynamic-Coupled Amp.	250	—	—	—	32				7000	3.7	

TABLE II — 6.3-VOLT GLASS TUBES WITH OCTAL BASES — *Continued*

Type	Name	Socket Connections[1]	Cathode	Fil. or Heater Volts	Fil. or Heater Amps.	Use	Plate Supply Volts	Grid Bias	Screen Volts	Screen Current Ma.	Plate Current Ma.	Plate Resistance, Ohms	Transconductance Micromhos	Amp. Factor	Load Resistance Ohms	Power Output Watts	Type
6AC6G	Direct-Coupled Amplifier	7W	Htr.	6.3	1.1	Class-A Amplifier	180 180	0 0	Input Output		7.0 45	—	3000	54	4000	3.8	6AC6G
6AD5G	High-μ Triode	6Q	Htr.	6.3	0.3	Class-A Amplifier	250	− 2.0	—	—	0.9	—	1500	100	—	—	6AD5G
6AD6G	Electron-Ray Tube	7AG	Htr.	6.3	0.15	Indicator Tube	100	0 for 90°; −23 for 135°; 45 for 0°. Target current 1.5 ma.									6AD6G
6AD7G	Triode-Pentode	8AY	Htr.	6.3	0.85	Triode Amplifier	250	−25.0	—	—	4.0	19000	325	6.0	—	—	6AD7G
						Pentode Amplifier	250	−16.5	250	6.5	34	80000	2500	—	7000	3.2	
6AE5G	Triode Amplifier	6Q	Htr.	6.3	0.3	Class-A Amplifier	95	−15.0	—	—	7.0	3500	1200	4.2	—	—	6AE5G
6AE6G	Twin-Plate Triode	7AH	Htr.	6.3	0.15	Indicator Control	250 250	− 1.5 − 1.5	—	—	6.5[4] 4.5[5]	25000 35000	1000 950	25 33	—	—	6AE6G
6AE7GT	Twin-Input Triode[7]	7AX	Htr.	6.3	0.5	Driver Amplifier	250	−13.5	—	—	5.0	9300	1500	14	—	—	6AE7GT
6AF5G	Triode Amplifier	6Q	Htr.	6.3	0.3	Class-A Amplifier	180	−18.0	—	—	7.0	—	1500	7.4	—	—	6AF5G
6AF6G	Electron-Ray Tube	7AG	Htr.	6.3	0.15	Indicator Tube	100	0 for 100°; 60 for 0°. Target current 0.9									6AF6G
6AF7G	Twin Electron Ray	8AG	Htr.	6.3	0.3	Indicator Tube											
6AG6G	Power Amplifier Pentode	7S	Htr.	6.3	1.25	Class-A Amplifier	250	− 6.0	250	6.0	32	—	10000	—	8500	3.75	6AG6G
6AH7GT	Twin Triode	8BE	Htr.	6.3	0.3	Converter and Amp.	250	− 9.0	—	—	12[3]	6600	2400	16	—	—	6AH7GT
6AL6G	Beam Power Amplifier	6AM	Htr.	6.3	0.9	Class-A Amplifier	250	−14.0	250	5.0	72	22500	6000	—	2500	6.5	6AL6G
6B4G	Triode Power Amplifier	5S	Fil.	6.3	1.0	Power Amplifier	Characteristics same as Type 6A3 — Table IV							—	—	—	6B4G
6B6G	Duplex-Diode High-μ Triode	7V	Htr.	6.3	0.3	Detector-Amplifier	Characteristics same as Type 75 — Table IV							—	—	—	6B6G
6C8G	Twin Triode	8G	Htr.	6.3	0.3	Amp. 1 Section	250	− 4.5	—	—	3.1	26000	1450	38	—	—	6C8G
6D8G	Pentagrid Converter	8A	Htr.	6.3	0.15	Converter	250	− 3.0	100	Cathode current 13.0 Ma.		Anode grid (No. 2) Volts = 250[9]					6D8G
6E8G	Triode-Hexode Converter	8O	Htr.	6.3	0.3	Osc.-Mixer	250	− 2.0	Triode Plate 150 volts								6E8G
6F8G	Twin Triode	8G	Htr.	6.3	0.6	Amplifier	250	− 8.0	—	—	9[3]	7700	2600	20	—	—	6F8G
6G6G	Pentode Power Amplifier	7S	Htr.	6.3	0.15	Class-A Amplifier	180	− 9.0	180	2.5	15	175000	2300	400	10000	1.1	6G6G
6H4GT	Diode Rectifier	5AF	Htr.	6.3	0.15	Detector	100	—	—	—	4.0	—	—	—	—	—	6H4GT
6H8G	Duo-Diode High-μ Pentode	8E	Htr.	6.3	0.3	Class-A Amplifier	250	− 2.0	100	—	8.5	650000	2400	—	—	—	6H8G
6J8G	Triode Heptode	8H	Htr.	6.3	0.3	Converter	250	− 3.0	100	2.8	1.2	Anode-grid (No. 2) 250 volts max.[9] 5 ma.					6J8G
6K5G	High-μ Triode	5U	Htr.	6.3	0.3	Class-A Amplifier	250	− 3.0	—	—	1.1	50000	1400	70	—	—	6K5G
6K6G	Pentode Power Amplifier	7S	Htr.	6.3	0.4	Class-A Amplifier	Characteristics same as Type 41 — Table IV										6K6G
6L5G	Triode Amplifier	6Q	Htr.	6.3	0.15	Class-A Amplifier	250	− 9.0	—	—	8.0	—	1900	17	—	—	6L5G
6M6G	Power Amplifier Pentode	7S	Htr.	6.3	1.2	Class-A Amplifier	250	− 6.0	250	4.0	36	—	9500	—	7000	4.4	6M6G
6M7G	Triple-Grid Amplifier	7R	Htr.	6.3	0.3	R. F. Amplifier	250	− 2.5	125	2.8	10.5	900000	3400	—	—	—	6M7G
6M8GT	Diode Triode Pentode	8AU	Htr.	6.3	0.6	Triode Amplifier	100	—	—	—	0.5	91000	1100	—	—	—	6M8GT
						Pentode Amplifier	100	− 3.0	100	—	8.5	200000	1900	—	—	—	
6N6G	Direct-Coupled Amplifier	7W	Htr.	6.3	0.8	Power Amplifier	Characteristics same as Type 6B5 — Table IV							—	—	—	6N6G
6P5G	Triode Amplifier	6Q	Htr.	6.3	0.3	Class-A Amplifier	250	−13.5	—	—	5.0	9500	1450	13.8	—	—	6P5G
6P7G	Triode-Pentode	7U	Htr.	6.3	0.3	Class-A Amplifier	Characteristics same as 6F7 — Table IV										6P7G
6P8G	Triode-Hexode Converter	8K	Htr.	6.3	0.8	Osc.-Mixer	250	− 2.0	75	1.4	1.5	Triode Plate 100 v. 2.2 ma.					6P8G
6Q6G	Diode-Triode	6Y	Htr.	6.3	0.15	Class-A Amplifier	250	− 3.0	—	—	1.2	—	1050	65	—	—	6Q6G
6R6G	Pentode Amplifier	6AA	Htr.	6.3	0.3	Class-A Amplifier	250	− 3.0	100	1.7	7.0	—	1450	1160	—	—	6R6G
6S6GT	Triple-Grid Variable-μ	5AK	Htr.	6.3	0.45	R.F. Amplifier	250	− 2.0	100	3.0	13	350000	4000	—	—	—	6S6GT
6SD7GT	Triple-Grid Semi-Variable-μ	8N	Htr.	6.3	0.3	R.F. Amplifier	250	− 2.0	100	1.9	6.0	1000000	3600	—	—	—	6SD7GT

TABLE II — 6.3-VOLT GLASS TUBES WITH OCTAL BASES — *Continued*

Type	Name	Socket Connections [1]	Cathode	Fil. or Heater Volts	Fil. or Heater Amps.	Use	Plate Supply Volts	Grid Bias	Screen Volts	Screen Current Ma.	Plate Current Ma.	Plate Resistance, Ohms	Transconductance Micromhos	Amp. Factor	Load Resistance Ohms	Power Output Watts	Type
6SE7GT	Triple-Grid Amplifier	8N	Htr.	6.3	0.3	R.F. Amplifier	250	— 1.5	100	1.5	4.5	1100000	3400	3750	—	—	6SE7GT
6SL7GT	Twin Triode	8BD	Htr.	6.3	0.3	Amplifier	250	— 2.0	—	—	2.3 [3]	44000	1600	70	—	—	6SL7GT
6SN7GT	Twin Triode	8BD	Htr.	6.3	0.3	Amplifier	250	— 8.0	—	—	9.0 [3]	7700	2600	20	—	—	6SN7GT
6T6GM [8]	Triple-Grid Amplifier	6Z	Htr.	6.3	0.45	R.F. Amplifier	250	— 1.0	100	2.0	10	1000000	5500	—	—	—	6T6GM
6U6GT	Beam Power Amplifier	7AC	Htr.	6.3	0.75	Class-A Amplifier	200	—14.0	135	3.0	56	20000	6200	—	3000	5.5	6U6GT
6U7G	Triple Grid Variable-μ	7R	Htr.	6.3	0.3	R.F. Amplifier	Characteristics same as Type 6D6 — Table III										6U7G
6V7G	Duplex Diode-Triode	7V	Htr.	6.3	0.3	Detector-Amplifier	Characteristics same as Type 85 — Table III										6V7G
6W6GT	Beam Power Amplifier	7AC	Htr.	6.3	1.25	Class-A Amplifier	135	— 9.5	135	12.0	61.0	—	9000	215	2000	3.3	6W6GT
6W7G	Triple-Grid Det. Amp.	7R	Htr.	6.3	0.15	Class-A Amplifier	250	— 3.0	100	2.0	0.5	1500000	1225	1850	—	—	6W7G
6X6G	Electron-Ray Tube	7AL	Htr.	6.3	0.3	Indicator Tube	250	0 v. for 300°, 2 ma. —8 v. for 0°, 0 ma. Vane grid 135 v.									6X6G
6Y6G	Beam Power Amplifier	7AC	Htr.	6.3	1.25	Class-A Amplifier	135	—13.5	135	3.0	60.0	9300	7000	—	2000	3.6	6Y6G
6Y7G	Twin Triode Amplifier	8B	Htr.	6.3	0.3	Class-B Amplifier	Characteristics same as Type 79 — Table IV										6Y7G
6Z7G	Twin Triode Amplifier	8B	Htr.	6.3	0.3	Class-B Amplifier	180	0	—	—	8.4 [2]	—	—	—	12000	4.2	6Z7G
							135	0	—	—	6.0 [2]	—	—	—	9000	2.5	
1223	Pentode Amplifier	7R	Htr.	6.3	0.3	Class-A Amplifier	Characteristics same as 6C6 — Table IV										1223
1231	Pentode Amplifier	8V	Htr.	6.3	0.45	Class-A Amplifier	300	— 2.5 [6]	150	2.5	10	700000	5500	3850	—	—	1231
7000	Low-Noise Amplifier	7R	Htr.	6.3	0.3	Class-A Amplifier	Characteristics same as Type 6J7 — Table I										7000

[1] Refer to Receiving Tube Diagrams. No connection to Pin No. 1.
[2] No-signal value for 2 tubes.
[3] Per plate.
[4] Plate No. 1, remote cut-off.
[5] Plate No. 2, sharp cut-off.
[6] Through 200-ohm cathode resistor.
[7] Common plate.
[8] Metal-sprayed glass envelope.
[9] Through 20,000-ohm dropping resistor.

TABLE III — 7-VOLT LOKTAL-BASE TUBES

For other loktal-base types see Tables VIII, IX, X and XIII.

Type	Name	Socket Connections	Cathode	Heater* Volts	Heater* Amps.	Use	Plate Supply Volts	Grid Bias	Screen Volts	Screen [1] Current Ma.	Plate [1] Current Ma.	Plate Resistance, Ohms	Trans-conductance Micromhos	Amp. Factor	Load Resistance Ohms	Power Output Watts	Type
7A4	Triode Amplifier	5 AC	Htr.	7.0	0.32	Class-A Amplifier	250	— 8.0	—	—	9.0	7700	2600	20	—	—	7A
7A5	Beam Power Amplifier	6 AT	Htr.	7.0	0.75	Class-A Amplifier	125	— 9.0	125	3.2/8	37.5/40	17000	6100	—	2700	1.9	7A5
7A6	Twin Diode	7 AJ	Htr.	7.0	0.16	Rectifier	Max. A.C. volts per plate — 150. Max. Output current — 10 ma.										7A6
7A7	Remote Cut-off Pentode	8 V	Htr.	7.0	0.32	R.F. Amplifier	250	— 3.0	100	2.0	8.6	800000	2000	1600	—	—	7A7
7A8	Multigrid Converter	8 U	Htr.	7.0	0.16	Osc.-Mixer	250	— 3.0	100	3.1	3.0	50000	Anode-grid 250 volts max.[2]				7A8
7B4	High-μ Triode	5 AC	Htr.	7.0	0.32	Class-A Amplifier	250	— 2.0	—	—	0.9	66000	1500	100	—	—	7B4
7B5	Pentode Power Amplifier	6 AE	Htr.	7.0	0.43	Class-A Amplifier	250	—18.0	250	5.5/10	32/33	68000	2300	—	7600	3.4	7B5
7B6	Duo-Diode Triode	8 W	Htr.	7.0	0.32	Class-A Amplifier	250	— 2.0	—	—	1.0	91000	1100	100	—	—	7B6
7B7	Remote Cut-off Pentode	8 V	Htr.	7.0	0.16	R.F. Amplifier	250	— 3.0	100	2.0	8.5	700060	1700	1200	—	—	7B7
7B8	Pentagrid Converter	8 X	Htr.	7.0	0.32	Osc.-Mixer	250	— 3.0	100	2.7	3.5	360000	Anode-grid 250 volts max.[2]				7B8
7C5	Tetrode Power Amplifier	6 AA	Htr.	7.0	0.48	Class-A Amplifier	250	—12.5	250	4.5/7	45/47	52000	4100	—	5000	4.5	7C5
7C6	Duo-Diode Triode	8 W	Htr.	7.0	0.16	Class-A Amplifier	250	— 1.0	—	—	1.3	100000	1000	100	—	—	7C6
7C7	Pentode Amplifier	8 V	Htr.	7.0	0.16	R.F. Amplifier	250	— 3.0	100	0.5	2.0	2 meg.	1300	—	—	—	7C7

TABLE III — 7-VOLT LOKTAL-BASE TUBES — *Continued*

Type	Name	Socket Connections	Cathode	Heater Volts	Heater Amps.	Use	Plate Supply Volts	Grid Bias	Screen Volts	Screen[1] Current Ma.	Plate[1] Current Ma.	Plate Resistance, Ohms	Transconductance Micromhos	Amp. Factor	Load Resistance Ohms	Power Output Watts	Type
7D7	Triode-Hexode Converter	8 AR	Htr.	7.0	0.48	Osc.-Mixer	250	— 3.0	Triode Plate (No. 3) 150 v. 3.5 ma.								7D7
7E6	Duo-Diode Triode	8 W	Htr.	7.0	0.32	Class-A Amplifier	250	— 9.0	—	—	9.5	8500	1900	16	—	—	7E6
7E7	Duo-Diode Pentode	8W	Htr.	7.0	0.32	Class-A Amplifier	250	— 3.0	100	1.6	7.5	700000	1300	—	—	—	7E7
7F7	Twin Triode	8AC	Htr.	7.0	0.32	Class-A Amplifier[3]	250	— 2.0	—	—	2.3	44000	1600	70	—	—	7F7
7G7/1232	Triple-Grid Amplifier	8 V	Htr.	7.0	0.48	Class-A Amplifier	250	— 2.0	100	2.0	6.0	800000	4500	—	—	—	7G7/1232
7H7	Triple-Grid Semi-Variable-μ	8 V	Htr.	7.0	0.32	R.F. Amplifier	250	— 2.5	150	2.5	9.0	1000000	3500	—	—	—	7H7
7J7	Triode-Hexode Converter	8 AR	Htr.	7.0	0.32	Osc.-Mixer	250	— 3.0	100	2.9	1.3	Triode Plate 250 v. Max.[2]					7J7
7K7	Duo-Diode High-μ Triode	8BF	Htr.	7.0	0.32	Class-A Amplifier	250	— 2.0	—	—	2.3	44000	1600	70	—	—	7K7
7L7	Triple-Grid Amplifier	8 V	Htr.	7.0	0.32	Class-A Amplifier	250	— 1.5	100	1.5	4.5	100000	3100	Cathode Resistor 250 ohms			7L7
7N7	Twin Triode	8AC	Htr.	7.0	0.6	Class-A Amplifier[3]	250	— 8.0	—	—	9.0	7700	2600	20	—	—	7N7
7Q7	Pentagrid Converter	8AL	Htr.	7.0	0.32	Osc.-Mixer	250	0	100	8.0	3.4	800000	Grid No. 1 resistor 20000 ohms				7Q7
7R7	Duo-Diode Pentode	8AE	Htr.	7.0	0.32	Class-A Amplifier	250	— 1.0	100	1.7	5.7	1000000	3200	—	—	—	7R7
7S7	Triode Hexode Converter	8AR	Htr.	7.0	0.32	Osc.-Mixer	250	— 2.0	100	2.2	1.7	2000000	Triode Plate 250 v. Max.[2]				7S7
7V7	Triple-Grid Amplifier	8V	Htr.	7.0	0.48	Amplifier	300	—[1]	150[5]	3.9	9.6	300000	5800	—	—	—	7V7
XXL	Triode Oscillator	5AC	Htr.	7.0	0.32	Oscillator	250	— 8.0	—	—	8.0	—	2300	20	—	—	XXL

* Maximum rating, corresponding to 130-volt line condition; normal rating is 6.3 v. for 117-v. line.

[1] Values to left of diagonal lines are for "no-signal" condition; values to right are "with signal." [2] Applied through 20000-ohm dropping resistor. [3] Each triode. [4] Cathode bias resistor, 160 ohms.
[5] From fixed screen supply. If series resistor from plate supply is used, value should be 40,000 ohms. Series resistor gives extended cut-off (variable-μ) characteristic, fixed screen supply gives sharp cut-off.

TABLE IV — 6.3-VOLT GLASS RECEIVING TUBES

Type	Name	Base[4]	Socket Connections[1]	Cathode	Fil. or Heater Volts	Fil. or Heater Amps.	Use	Plate Supply Volts	Grid Bias	Screen Volts	Screen Current Ma.	Plate Current Ma.	Plate Resistance, Ohms	Transconductance Micromhos	Amp. Factor	Load Resistance Ohms	Power Output Watts	Type
6A3	Triode Power Amplifier	4-pin M.	4D	Fil.	6.3	1.0	Class-A Amplifier	250	— 45	—	—	60	800	5250	4.2	2500	3.5	6A3
							Push-Pull Amplifier	300 300	— 62 Note 8	Fixed Bias Self Bias		40 40	Power output for 2 tubes load plate-to-plate			3000 5000	15 10	
6A4[3]	Pentode Power Amplifier	5-pin M.	5B	Fil.	6.3	0.3	Class-A Amplifier	180	—12.0	180	3.9	22.0	45500	2200	100	8000	1.40	6A4
6A6	Twin Triode Amplifier	7-pin M.	7B	Htr.	6.3	0.8	Class-B Amplifier	250 300	0 0	—	—	Power output is for one tube at stated load, plate-to-plate				8000 10000	8.0 10.0	6A6
6A7	Pentagrid Converter	7-pin S.	7C	Htr.	6.3	0.3	Converter	250	— 3.0	100	2.2	3.5	360000	Anode grid (No. 2) 200 volts max.				6A7
6AB5	Electron-Ray Tube	6-pin S.	6R	Htr.	6.3	0.15	Indicator Tube	135	0	—	—	0.5	Target current 4.5 ma.					6AB5
6B5	Direct-Coupled Power Amplifier	6-pin M.	6D	Htr.	6.3	0.8	Class-A Amplifier	300	0	—	6[5]	45	241000	2400	58	7000	4.0	6B5
							Push-Pull Amplifier	400	—13.0	—	4.5[5]	40	—	—	—	10000	20	
6B7	Duplex-Diode Pentode	7-pin S.	7D	Htr.	6.3	0.3	Pentode R.F. Amplifier	250	— 3.0	125	2.3	9.0	650000	1125	730	—	—	6B7
6C6	Triple-Grid Amplifier	6-pin S.	6F	Htr.	6.3	0.3	R.F. Amplifier	250	— 3.0	100	0.5	2.0	1.5 meg.	1225	1500	—	—	6C6
6C7	Duplex Diode Triode	7-pin S.	7G	Htr.	6.3	0.3	Class-A Amplifier	250	— 9.0	—	—	4.5	—	20	1250	—	—	6C7
6D6	Triple-Grid Variable-μ	6-pin S.	6F	Htr.	6.3	0.3	R.F. Amplifier	250	— 3.0	100	2.0	8.2	800000	1600	1280	—	—	6D6
6D7	Triple-Grid Amp.	7-pin S.	7H	Htr.	6.3	0.3	Class-A Amplifier	250	— 3.0	100	0.5	2.0	—	1600	1280	—	—	6D7
6E5	Electron-Ray Tube	6-pin S.	6R	Htr.	6.3	0.3	Indicator Tube	250	0	—	—	0.25	Target Current 4 ma.				—	6E5

TABLE IV—6.3-VOLT GLASS RECEIVING TUBES—*Continued*

Type	Name	Base [4]	Socket Connections [1]	Cathode	Fil. or Heater Volts	Fil. or Heater Amps.	Use	Plate Supply Volts	Grid Bias	Screen Volts	Screen Current Ma.	Plate Current Ma.	Plate Resistance, Ohms	Transconductance Micromhos	Amp. Factor	Load Resistance Ohms	Power Output Watts	Type
6E6	Twin Triode Amplifier	7-pin M.	7B	Htr.	6.3	0.6	Class-A Amplifier	250	−27.5	Per plate — 18.0			3500	1700	6.0	14000	1.6	6E6
6E7	Triple-Grid Variable-μ	7-pin S.	7H	Htr.	6.3	0.3	R.F. Amplifier	Characteristics same as 6U7G — Table II										6E7
6F7	Triode Pentode	7-pin S.	7E	Htr.	6.3	0.3	Triode Unit Amplifier	100	− 3.0	—	—	3.5	16000	500	8	—	—	6F7
							Pentode Unit Amplifier	250	− 3.0	100	1.5	6.5	850000	1100	900	—	—	
6G5/6U5	Electron-Ray Tube	6-pin S.	6R	Htr.	6.3	0.3	Indicator Tube	250	Cut-off Grid Bias = −22 v.			0.24	Target Current 4 ma.				—	6G5/6U5
								100	" " " = −8 v.			0.19	" " 1 "					
6H5	Electron-Ray Tube	6-pin S.	6R	Htr.	6.3	0.3	Indicator Tube	Same characteristics as Type 6G5 — Circular Pattern										6H5
6N5	Electron-Ray Tube	6-pin S.	6R	Htr.	6.3	0.15	Indicator Tube	180	Cut-off Grid Bias = −12 v.			0.5	Target Current 2 ma.				—	6N5
6T5	Electron-Ray Tube	6-pin S.	6R	Htr.	6.3	0.3	Indicator Tube	250	Cut-off Grid Bias = −12 v.			0.24	Target Current 4 ma.				—	6T5
36	Tetrode R.F. Amplifier	5-pin S.	5E	Htr.	6.3	0.3	R.F. Amplifier	250	− 3.0	90	1.7	3.2	550000	1080	595	—	—	36
37	Triode Detector Amplifier	5-pin S.	5A	Htr.	6.3	0.3	Class-A Amplifier	250	−18.0	—	—	7.5	8400	1100	9.2	—	—	37
38	Pentode Power Amplifier	5-pin S.	5F	Htr.	6.3	0.3	Class-A Amplifier	250	−25.0	250	3.8	22.0	100000	1200	120	10000	2.50	38
39/44	Variable-μ R.F. Amplifier	5-pin S.	5F	Htr.	6.3	0.3	R.F. Amplifier	250	3.0	90	1.4	5.8	1000000	1050	1050	—	—	39/44
41	Pentode Power Amplifier	6-pin S.	6B	Htr.	6.3	0.4	Class-A Amplifier	250	−18.0	250	5.5	32.0	68000	2200	150	7600	3.40	41
42	Pentode Power Amplifier	6-pin M.	6B	Htr.	6.3	0.7	Class-A Amplifier	250	−16.5	250	6.5	34.0	100000	2200	220	7000	3.0	42
75	Duplex-Diode Triode	6-pin S.	6G	Htr.	6.3	0.3	Triode Amplifier	250	− 1.35	—	—	0.4	91000	1100	100	—	—	75
76	Triode Detector Amplifier	5-pin S.	5A	Htr.	6.3	0.3	Class-A Amplifier	250	−13.5	—	—	5.0	9500	1450	13.8	—	—	76
77	Triple-Grid Detector	6-pin S.	6F	Htr.	6.3	0.3	R.F. Amplifier	250	− 3.0	100	0.5	2.3	1500000	1250	1500	—	—	77
78	Triple-Grid Variable-μ	6-pin S.	6F	Htr.	6.3	0.3	R.F. Amplifier	250	− 3.0	100	1.7	7.0	800000	1450	1160	—	—	78
79	Twin Triode Amplifier	6-pin S.	6H	Htr.	6.3	0.6	Class-B Amplifier	250	0	—	—	Power output is for one tube				14000	8.0	79
85	Duplex-Diode Triode	6-pin S.	6G	Htr.	6.3	0.3	Class-A Amplifier	250	−20.0	—	—	8.0	7500	1100	8.3	20000	0.350	85
85AS	Duplex-Diode Triode	6-pin S.	6G	Htr.	6.3	0.3	Class-A Amplifier	250	− 9.0	—	—	5.5	—	1250	20	—	—	85 AS
89	Triple-Grid Power Amplifier	6-pin S.	6F	Htr.	6.3	0.4	Triode Amplifier [6]	250	−31.0	—	—	32.0	2600	1800	4.7	5500	0.900	89
							Pentode Amplifier [7]	250	−25.0	250	5.5	32.0	70000	1800	125	6750	3.40	
1221 [9]	Triple-Grid Amplifier	6-pin S.	6F	Htr.	6.3	0.3	Class-A Amplifier	Characteristics same as 6C6										1221
1603 [9]	Triple-Grid Amplifier	6-pin M.	6F	Htr.	6.3	0.3	Class-A Amplifier	Characteristics same as 6C6										1603
7700 [9]	Triple-Grid Amplifier	6-pin S.	6F	Htr.	6.3	0.3	Class-A Amplifier	Characteristics same as 6C6										7700
RK100	Mercury-vapor Triode	6-pin M.	6A	Htr.	6.3	0.6	Amplifier	100	−2.5	Cathode (G1) current 250 ma.				20000	50	—	—	RK100

[1] Refer to Receiving Tube Diagrams.
[2] Suppressor grid, connected to cathode inside tube, not shown on base diagram.
[3] Also known as Type LA.
[4] S. — small; M. — medium.
[5] Current to input plate (P_1).
[6] Grids Nos. 2 and 3 connected to plate.
[7] Grid No. 2, screen; grid No. 3, suppressor.
[8] Cathode resistor, 780 ohms.
[9] Low noise, non-microphonic, tubes.

TABLE V — 2.5-VOLT RECEIVING TUBES

Type	Name	Base [3]	Socket Connections [1]	Cathode	Fil. or Heater Volts	Fil. or Heater Amps	Use	Plate Supply Volts	Grid Bias	Screen Volts	Screen Current Ma.	Plate Current Ma.	Plate Resistance, Ohms	Transconductance Micromhos	Amp. Factor	Load Resistance Ohms	Power Output Watts	Type
2A3	Triode Power Amplifier	4-pin M.	4D	Fil.	2.5	2.5	Class-A Amplifier	Characteristics same as Type 6A3, Table IV										2A3
2A5	Pentode Power Amplifier	6-pin M.	6B	Htr.	2.5	1.75	Class-A Amplifier	Characteristics same as Type 42, Table IV										2A5
2A6	Duplex-Diode Triode	6-pin S.	6G	Htr.	2.5	0.8	Class-A Amp.	Characteristics same as Type 75, Table IV										2A6
2A7	Pentagrid Converter	7-pin S.	7C	Htr.	2.5	0.8	Osc.-Mixer	Characteristics same as Type 6A7, Table IV										2A7
2B6	Special Power Amplifier	7-pin M.	7J	Htr.	2.5	2.25	Amplifier	250	−24.0	——	——	40.0	5150	3500	18.0	5000	4.0	2B6
2B7	Duplex-Diode Pentode	7-pin S.	7D	Htr.	2.5	0.8	Pentode Amplifier	Characteristics same as Type 6B7 — Table IV										2B7
2E5	Electron-Ray Tube	6-pin S.	6R	Htr.	2.5	0.8	Indicator Tube	Characteristics same as Type 6E5 — Table IV										2E5
2G5	Electron-Ray Tube	6-pin S.	6R	Htr.	2.5	0.8	Indicator Tube	Characteristics same as 6U5-6G5 — Table IV										2G5
24-A	Tetrode R.F. Amplifier	5-pin M.	5E	Htr.	2.5	1.75	Screen-Grid R.F. Amp.	250	— 3.0	90	1.7	4.0	600000	1050	630	——	——	24-A
							Bias Detector	250	— 5.0	20	Plate current adjusted to 0.1 ma. with no signal							
27	Triode Detector-Amplifier	5-pin M.	5A	Htr.	2.5	1.75	Class-A Amplifier	250	−21.0	——	——	5.2	9250	975	9.0	——	——	27
							Bias Detector	250	−30.0	——	Plate current adjusted to 0.2 ma. with no signal							
35	Variable-μ Amplifier	5-pin M.	5E	Htr.	2.5	1.75	Screen-Grid R.F. Amp.	250	— 3.0	90	2.5	6.5	400000	1050	420	——	——	35
45	Triode Power Amplifier	4-pin M.	4D	Fil.	2.5	1.5	Class-A Amplifier	275	−56.0	——	——	36.0	1700	2050	3.5	4600	2.00	45
46	Dual-Grid Power Amplifier	5-pin M.	5C	Fil.	2.5	1.75	Class-A Amplifier [4]	250	−33.0	——	——	22.0	2380	2350	5.6	6400	1.25	46
							Class-B Amplifier [5]	400	0	——	——	Power output for 2 tubes				5800	20.0	
47	Pentode Power Amplifier	5-pin M.	5B	Fil.	2.5	1.75	Class-A Amplifier	250	−16.5	250	6.0	31.0	60000	2500	150	7000	2.7	47
53	Twin Triode Amplifier	7-pin M.	7B	Htr.	2.5	2.0	Class-B Amplifier	Characteristics same as Type 6A6, Table IV										53
55	Duplex-Diode Triode	6-pin S.	6G	Htr.	2.5	1.0	Class-A Amplifier	Characteristics same as Type 85, Table IV										55
56	Triode Amplifier, Detector	5-pin S.	5A	Htr.	2.5	1.0	Class-A Amplifier	Characteristics same as Type 76, Table IV										56
57	Triple-Grid Amplifier	6-pin S.	6F	Htr.	2.5	1.0	R.F. Amplifier	250	— 3.0	100	0.5	2.0	1.5 meg.	1225	1500	——	——	57
58	Triple-Grid Variable-μ	6-pin S.	6F	Htr.	2.5	1.0	Screen-Grid R.F. Amp.	250	— 3.0	100	2.0	8.2	800000	1600	1280	——	——	58
59	Triple-Grid Power Amplifier	7-pin M.	7A	Htr.	2.5	2.0	Class-A Triode [6]	250	−28.0	——	——	26.0	2300	2600	6.0	5000	1.25	59
							Class-A Pentode [7]	250	−18.0	250	9.0	35.0	40000	2500	100	6000	3.0	
RK15	Triode Power Amplifier	4-pin M.	4D [2]	Fil.	2.5	1.75	Characteristics same as Type 46 with Class-B connections											RK15
RK16	Triode Power Amplifier	5-pin M.	5A	Htr.	2.5	2.0	Characteristics same as Type 59 with Class-A triode connections											RK16
RK17	Pentode Power Amplifier	5-pin M.	5F	Htr.	2.5	2.0	Characteristics same as Type 2A5											RK17

[1] Refer to Receiving Tube Diagrams.
[2] Grid connection to cap; no connection to No. 3 pin.
[3] S. — small; M. — medium.
[4] Grid No. 2 tied to plate.
[5] Grids Nos. 1 and 2 tied together.
[6] Grids Nos. 2 and 3 connected to plate.
[7] Grid No. 2, screen; grid No. 3, suppressor.

TABLE VI — 2.0-VOLT BATTERY RECEIVING TUBES

Type	Name	Base [2]	Socket Connections [1]	Cathode	Fil. or Heater Volts	Fil. or Heater Amps.	Use	Plate Supply Volts	Grid Bias	Screen Volts	Screen Current Ma.	Plate Current Ma.	Plate Resistance, Ohms	Transconductance Micromhos	Amp. Factor	Load Resistance Ohms	Power Output Watts	Type
1A4P	Variable-μ Pentode	4-pin S.	4M	Fil.	2.0	0.06	R.F. Amplifier	180	— 3.0	67.5	0.8	2.3	1000000	750	750	——	——	1A4P
1A4T	Variable-μ Tetrode	4-pin S.	4K	Fil.	2.0	0.06	R.F. Amplifier	180	— 3.0	67.5	0.7	2.3	960000	750	720	——	——	1A4T
1A6	Pentagrid Converter	6-pin S.	6L	Fil.	2.0	0.06	Converter	180	— 3.0	67.5	2.4	1.3	500000	Anode grid (No. 2) 180 max. volts				1A6
1B4P/951	Pentode R.F. Amplifier	4-pin S.	4M	Fil.	2.0	0.06	R.F. Amplifier	180 90	— 3.0 — 3.0	67.5 67.5	0.6 0.7	1.7 1.6	1500000 1000000	650 600	1000 550	——	——	1B4P/951

TABLE VI — 2.0-VOLT BATTERY RECEIVING TUBES — *Continued*

Type	Name	Base [2]	Socket Connections [1]	Cathode	Fil. or Heater Volts	Fil. or Heater Amps	Use	Plate Supply Volts	Grid Bias	Screen Volts	Screen Current Ma.	Plate Current Ma.	Plate Resistance, Ohms	Transconductance Micromhos	Amp. Factor	Load Resistance Ohms	Power Output Watts	Type
1B5/25S	Duplex-Diode Triode	6-pin S.	6M	Fil.	2.0	0.06	Triode Class-A Amplifier	135	— 3.0	—	—	0.8	35000	575	20	—	—	1B5/25S
1C6	Pentagrid Converter	6-pin S.	6L	Fil.	2.0	0.12	Converter	180	— 3.0	67.5	2.0	1.5	750000	Anode grid (No. 2) 135 max. volts				1C6
1F4	Pentode Power Amplifier	5-pin M.	5K	Fil.	2.0	0.12	Class-A Amplifier	135	— 4.5	135	2.6	8.0	200000	1700	340	16000	0.34	1F4
1F6	Duplex-Diode Pentode	6-pin S.	6W	Fil.	2.0	0.6	R.F. Amplifier	180	— 1.5	67.5	0.6	2.0	1000000	650	650	—	—	1F6
							A.F. Amplifier	135	— 1.0	135	Plate 0.25 megohm Screen 1.0 megohm					Amp. = 48		
15	R.F. Pentode	5-pin S.	5F	Htr.	2.0	0.22	R.F. Amplifier	135	— 1.5	67.5	0.3	1.85	800000	750	600	—	—	15
19	Twin-Triode Amplifier	6-pin S.	6C	Fil.	2.0	0.26	Class-B Amplifier	135	0	—	—		Load plate-to-plate			10000	2.1	19
30	Triode Detector Amplifier	4-pin S.	4D	Fil.	2.0	0.06	Class-A Amplifier	180	—13.5	—	—	3.1	10300	900	9.3	—	—	30
31	Triode Power Amplifier	4-pin S.	4D	Fil.	2.0	0.13	Class-A Amplifier	180	—30.0	—	—	12.3	3600	1050	3.8	5700	0.375	31
32	Tetrode R.F. Amplifier	4-pin M.	4K	Fil.	2.0	0.06	R.F. Amplifier	180	— 3.0	67.5	0.4	1.7	1200000	650	780	—	—	32
							Bias Detector	180	— 6.0	67.5	—	Plate current adjusted to 0.2 ma. with no signal						
33	Pentode Power Amplifier	5-pin M.	5K	Fil.	2.0	0.26	Class-A Amplifier	180	—18.0	180	5.0	22.0	55000	1700	90	6000	1.4	33
34	Variable-μ Pentode	4-pin M.	4M	Fil.	2.0	0.06	R.F. Amplifier	180	— 3.0	67.5	1.0	2.8	1000000	620	620	—	—	34
49	Dual-Grid Power Amplifier	5-pin M.	5C	Fil.	2.0	0.12	Class-A Amplifier [3]	135	—20.0	—	—	6.0	4175	1125	4.7	11000	0.17	49
							Class-B Amplifier [4]	180	0	—	—	Power output for 2 tubes at				12000	3.5	
840	R.F. Pentode	5-pin S.	5J	Fil.	2.0	0.130	Class-A Amplifier	180	— 3.0	67.5	0.7	1.0	1000000	400	400	—	—	840
950	Pentode Power Amplifier	5-pin M.	5B	Fil.	2.0	0.12	Class-A Amplifier	135	—16.5	1.35	2.0	7.0	100000	1000	100	13500	0.45	950
RK24	Triode Amplifier	4-pin M.	4D	Fil.	2.0	0.12	Class-A Amplifier	180	—13.5	—	—	8.0	5000	1600	8.0	12000	0.25	RK24

[1] See Receiving Tube Diagrams. [2] S.— small; M.— medium. [3] Grid No. 2 tied to plate. [4] Grids Nos. 1 and 2 tied together.

TABLE VII — 2.0-VOLT BATTERY TUBES WITH OCTAL BASES

Type	Name	Socket Connections	Cathode	Fil. or Heater Volts	Fil. or Heater Amps.	Use	Plate Supply Volts	Grid Bias	Screen Volts	Screen Current Ma.	Plate Current Ma.	Plate Resistance, Ohms	Transconductance Micromhos	Amp. Factor	Load Resistance Ohms	Power Output Watts	Type
1C7G	Pentagrid Converter	7Z	Fil.	2.0	0.06	Converter	—	—	Characteristics same as Type 1C6 — Table VI					—	—	—	1C7G
1D5GP	Variable-μ R.F. Pentode	5Y	Fil.	2.0	0.06	R.F. Amplifier	—	—	Characteristics same as Type 1A4P — Table VI					—	—	—	1D5GP
1D5GT	Variable-μ R.F. Tetrode	5R	Fil.	2.0	0.06	R.F. Amplifier	180	— 3.0	67.5	0.7	2.2	600000	650	—	—	—	1D5GT
1D7G	Pentagrid Converter	7Z	Fil.	2.0	0.06	Converter	—	—	Characteristics same as Type 1A6 — Table VI					—	—	—	1D7G
1E5GP	R.F. Amplifier Pentode	5Y	Fil.	2.0	0.06	R.F. Amplifier	—	—	Characteristics same as Type 1B4 — Table VI					—	—	—	1E5GP
1E7G	Double Pentode Power Amp.	8C	Fil.	2.0	0.24	Class-A Amplifier	135	— 7.5	135	2.0 [2]	6.5 [2]	220000	1600	350	24000	0.65	1E7G
1F5G	Pentode Power Amplifier	6X	Fil.	2.0	0.12	Class-A Amplifier	—	—	Characteristics same as Type 1F4 — Table VI					—	—	—	1F5G
1F7GV	Duplex-Diode Pentode	7AD	Fil.	2.0	0.06	Detector-Amplifier	—	—	Characteristics same as Type 1F6 — Table VI					—	—	—	1F7GV
1G5G	Pentode Power Amplifier	6X	Fil.	2.0	0.12	Class-A Amplifier	135	13.5	135	2.5	8.7	1600000	1550	250	9000	0.55	1G5G
1H4G	Triode Amplifier	5S	Fil.	2.0	0.06	Detector-Amplifier	—	—	Characteristics same as Type 30 — Table VI					—	—	—	1H4G
1H6G	Duplex-Diode Triode	7AA	Fil.	2.0	0.06	Detector-Amplifier	—	—	Characteristics same as Type 1B5 — Table VI					—	—	—	1H6G
1J5G	Pentode Power Amplifier	6X	Fil.	2.0	0.12	Class-A Amplifier	135	—16.5	135	2.0	7.0	—	950	100	13500	0.45	1J5G
1J6G	Twin Triode	7AB	Fil.	2.0	0.24	Class-B Amplifier	—	—	Characteristics same as Type 19 — Table VI					—	—	—	1J6G

[1] Refer to Receiving Tube Diagrams. [2] Total current for both sections; no signal.

TABLE VIII — 1.5-VOLT FILAMENT DRY-CELL TUBES

See also Table X for Special 1.4-volt Tubes

Type	Name	Base	Socket Connections [1]	Filament Volts	Filament Amps.	Use	Plate Supply Volts	Grid Bias	Screen Volts	Screen Current Ma.	Plate Current Ma.	Plate Resistance, Ohms	Transconductance Micromhos	Amp. Factor	Load Resistance Ohms	Power Output Milliwatts	Type
1A5G	Pentode Power Amplifier	7-pin O.	6X	1.4	0.05	Class-A Amplifier	85 [3]	−4.5 [3]	85	0.7	3.5	300000	800	240	25000	100	1A5G
1A7G	Pentagrid Converter	8-pin O.	7Z	1.4	0.05	Osc.-Mixer	90	0	45 [4]	0.6	0.55	600000	Anode-grid volts 90				1A7G
1B7G	Pentagrid Converter	6-pin O.	7Z	1.4	0.1	Osc.-Mixer	90	0	45	1.3	1.5	350000	Grid No. 1 resistor 200,000 ohms				1B7G
1B8GT	Diode Triode Tetrode	8-pin O.	8AW	1.4	0.1	Triode Amplifier	90	0	—	—	0.15	240000	275	—	—	—	1B8GT
						Tetrode Amplifier	90	−6.0	90	1.4	6.3	—	1150	—	14000	210	
1C5G	Pentode Power Amplifier	7-pin O.	6X	1.4	0.10	Class-A Amplifier	83 [3]	−7 [3]	83	1.6	7.0	110000	1500	165	9000	200	1C5G
1D8GT	Diode Triode Pentode	8-pin O.	8AJ	1.4	0.1	Triode Amplifier	90	0	—	—	1.1	43500	575	25	—	—	1D8GT
						Pentode Amplifier	90	−9.0	90	1.0	5.0	200000	925	—	—	—	
1E4G	Triode Amplifier	8-pin O.	5S [12]	1.4	0.05	Class-A Amplifier	90	0	—	—	4.5	11000	1325	14.5	—	—	1E4G
							90	−3.0			1.5	17000	825	14			
1G4G	Triode Amplifier	7-pin O.	5S	1.4	0.05	Class-A Amplifier	90	−6.0	—	—	2.3	10700	825	8.8	—	—	1G4G
1G6G	Twin Triode	6-pin O.	7AB	1.4	0.1	Class-A Amplifier	90	0	—	—	1.0	45000	675	30	—	—	1G6G
						Class-B Amplifier	90	0	—	—	1/7 [5]	34 volts input per grid			12000	675	
1H5G	Diode High-μ Triode	7-pin O.	5Z	1.4	0.05	Class-A Amplifier	90	0	—	—	0.14	240000	275	65	—	—	1H5G
1LA4	Pentode Power Amplifier	8-pin L.	5AD	1.4	0.05	Class-A Amplifier	Characteristics same as 1A5G										1LA4
1LA6	Pentagrid Converter	8-pin L.	7AK	1.4	0.05	Osc.-Mixer	90	0	45	0.6	0.55	Anode Grid Volts 90					1LA6
1LB4	Pentode Power Amplifier	8-pin L.	5AD	1.4	0.05	Class-A Amplifier	90	−9	90	1.0	5.0	200000	925	—	12000	200	1LB4
1LB6GL	Heptode Converter	8-pin L.	8AX	1.4	0.05	Osc.-Mixer	90	0	67.5	2.2	0.4	Grid No. 4 67.5 v., No. 5 0 v.					1LB6GL
1LC5	Triple-Grid Variable-μ	8-pin L.	7AO	1.4	0.05	R.F. Amplifier	90	0	45	0.2	1.15	1500000	775	—	—	—	1LC5
1LC6	Pentagrid Converter	8-pin L.	7AK	1.4	0.05	Osc.-Mixer	90	0	35 [9]	0.7	0.75	Anode Grid Volts 45					1LC6
1LD5	Diode Pentode	7-pin L.	6AX	1.4	0.05	Class-A Amplifier	90	0	45	0.1	0.6	950000	600	—	—	—	1LD5
1LE3	Triode Amplifier	8-pin L.	4AA	1.4	0.05	Class-A Amplifier	90	0	—	—	4.5	11200	1300	14.5	—	—	1LE3
							90	−3			1.3	19000	760				
1LH4	Diode High-μ Triode	8-pin L.	5AG	1.4	0.05	Class-A Amplifier	90	0	—	—	0.15	240000	275	65	—	—	1LH4
1LN5	Triple-Grid Amplifier	8-pin L.	7AO	1.4	0.05	Class-A Amplifier	90	0	90	0.3	1.2	1500000	750	—	—	—	1LN5
1N5G	Pentode R.F. Amplifier	7-pin O.	5Y	1.4	0.05	Class-A Amplifier	90	0	90	0.3	1.2	1500000	750	1160	—	—	1N5G
1N6G	Diode-Power-Pentode	6-pin O.	7AM	1.4	0.05	Class-A Amplifier	90	−4.5	90	0.6	3.1	300000	800	—	25000	100	1N6G
1P5G	Triple-Grid Pentode	5-pin O.	5Y	1.4	0.05	R.F. Amplifier	90	0	90	0.7	2.3	800000	800	640	—	—	1P5G
1Q5G	Tetrode Power Amplifier	5-pin O.	6AF	1.4	0.1	Class-A Amplifier	85	−5.0	85	1.2	7.2	70000	1950	—	9000	260	1Q5G
							90	−4.5	90	1.6	9.5	75000	2100		8000	270	
1R5	Pentagrid Converter	7-pin B. [10]	7AT	1.4	0.05	Osc.-Mixer	90	0	67.5	3.0	1.7	500000	Grid No. 1 100000 ohms				1R5
1S4	Pentagrid Power Amplifier	7-pin B. [10]	7AV	1.4	0.1	Class-A Amplifier	90	−7.0	67.5	1.4	7.4	100000	1575	—	8000	270	1S4
1S5	Diode Pentode	7-pin B. [10]	6AU	1.4	0.05	Class-A Amplifier	67.5	0	67.5	0.4	1.6	600000	625	—	—	—	1S5
						Resistor-Coupled Amp.	90	0	90	Screen resistor 3 meg., grid 10 meg.					1 meg.	50 [13]	
1SA6GT	R.F. Pentode	8-pin O.	6CA	1.4	0.05	R.F. Amplifier	90	0	67.5	0.68	2.45	800000	970	—	—	—	1SA6GT
1SB6GT	Diode Pentode	7-pin O.	6CB	1.4	0.05	Class-A Amplifier	90	0	67.5	0.38	1.45	700000	665	—	—	—	1SB6GT
						Resistance-Coupled Amp.	90	0	90	Screen resistor 5 meg., grid 10 meg.					1 meg.	110 [13]	
1T4	Triple-Grid Variable-μ	7-pin B.	6AR	1.4	0.05	Class-A Amplifier	90	0	45	0.65	2.0	800000	750	—	—	—	1T4
1T5GT	Beam Power Amplifier	7-pin O.	6AF	1.4	0.05	Class-A Amplifier	90	−6.0	90	1.4	6.5	—	1150	—	14000	170	1T5GT
CK501	Pentode Voltage Amplifier	5-pin P. [6]	6X	1.25	0.033	Class-A Amplifier	30	−0	30	0.06	0.3	1.0 meg.	325	—	—	—	CK501
							45	−1.25	45	0.055	0.28	1.5 meg.	300				

TABLE VIII — 1.5-VOLT FILAMENT DRY-CELL TUBES — *Continued*

Type	Name	Base	Socket Connections [1]	Filament Volts	Filament Amps.	Use	Plate Supply Volts	Grid Bias	Screen Volts	Screen Current Ma.	Plate Current Ma.	Plate Resistance, Ohms	Transconductance Micromhos	Amp. Factor	Load Resistance Ohms	Power Output Milliwatts	Type
CK502	Pentode Output Amplifier	5-pin P.[6]	6X	1.25	0.033	Class-A Amplifier	30	−0	30	0.13	0.55	500000	400	——	60000	3	CK502
CK503	Pentode Output Amplifier	5-pin P.[6]	6X	1.25	0.033	Class-A Amplifier	30	0	30	0.33	1.5	150000	600	——	20000	6 [7]	CK503
CK504	Pentode Output Amplifier	5-pin P.[6]	6X	1.25	0.033	Class-A Amplifier	30	−1.25	30	0.09	0.4	500000	350	——	60000	3 [7]	CK504
CK505	Pentode Voltage Amplifier	5-pin P.[6]	6X	0.625 [11]	0.03	Class-A Amplifier	30 45	0 −1.25	30 45	0.07 0.08	0.17 0.20	1100000 2000000	140 150	——	——	——	CK505
HY113	Triode Amplifier	5-pin P.[6]	5K [8]	1.4	0.07	Class-A Amplifier	45	−4.5	——	——	0.4	25000	250	6.3	40000	6.5	HY113
HY115	Pentode Voltage Amplifier	5-pin P.[6]	5K	1.4	0.07	Class-A Amplifier	45 90	−1.5 −1.5	22.5 45	0.008 0.1	0.03 0.48	5.2 meg. 1.3 meg.	58 270	300 370	——	——	HY115
HY125	Pentode Power Amplifier	5-pin P.[6]	5K	1.4	0.07	Class-A Amplifier	45 90	−3.0 −7.5	45 90	0.2 0.5	0.9 2.6	825000 420000	310 450	255 190	50000 28000	11.5 90	HY125
RK42	Triode Amplifier	4-pin S.	4D	1.5	0.6	Class-A Amplifier	Characteristics same as Type 30—Table VI										RK42
RK43	Twin Triode Amplifier	6-pin S.	6C	1.5	0.12	Twin Triode Amplifier	135	−3	——	——	4.5	14500	900	13	——	——	RK43

[1] Refer to Receiving Tube Diagrams.
[2] M. — medium; S. — small; O. — octal; L. — loktal.
[3] Grid bias obtained from 90-volt "B" supply through self-biasing resistor.
[4] Obtained from 90-volt supply through 70,000-ohm dropping resistor.
[5] Per tube. Values to left of diagonal line for no-signal condition; values to right are with signal.
[6] Special miniature 5-pin peanut base. Also available with small-shell octal base.
[7] With 5-megohm grid resistor and 0.02-μfd. grid coupling condenser.
[8] No screen connection.
[9] Through series resistor. Screen voltage must be at least 10 volts lower than oscillator anode.
[10] Special 7-pin "button" base, miniature type.
[11] Two tubes connected in series for 1.4-volt operation.
[12] Internal shield connected to pin 1.
[13] Voltage gain.

TABLE IX — HIGH-VOLTAGE HEATER TUBES

Type	Name	Base [3]	Socket Connections [1]	Heater Volts	Heater Amps.	Use	Plate Supply Volts	Grid Bias	Screen Volts	Screen Current Ma.	Plate Current Ma.	Plate Resistance, Ohms	Transconductance Micromhos	Amp. Factor	Load Resistance Ohms	Power Output Watts	Type
12A5	Pentode Power Amplifier	7-pin M.	7F	12.6 6.3	0.3 0.6	Class-A Amplifier	100 180	−15 −27	100 180	4.0 9.0	18 40	—— ——	—— ——	—— ——	5000 4500	0.7 2.8	12A5
12A6	Beam Power Amplifier	7-pin O.	7AC	12.6	0.5	Class-A_1 Amplifier	250	−12.5	250	3.5	30	50000	3000	——	7500	2.5	12A6
12A7	Rectifier-Amplifier [3]	7-pin M.	7K	12.6	0.3	Class-A Amplifier	135	−13.5	135	2.5	9.0	102000	975	100	13500	0.55	12A7
12A8GT	Pentagrid Converter	8-pin O.	8A	12.6	0.15	Osc.-Mixer	Characteristics same as 6A8—Table I										12A8GT
12AH7GT	Twin Triode	8-pin O.	8BE	12.6	0.15	Converter and Amp.	Characteristics same as 6AH7GT — Table II										12AH7GT
12B6M [3]	Diode Triode	6-pin O.	6Y	12.6	0.15	Class-A Amplifier	250	− 2.0	——	——	0.9	91000	1100	100	——	——	12B6M
12B8GT	Triode-Pentode	8-pin O.	8T	12.6	0.3	Class-A Triode	100	− 1	——	——	0.6	73000	1500	110	——	——	12B8GT
						Class-A Pentode	100	− 3	100	2	8	170000	2100	360	——	——	
12C8	Duplex-Diode Pentode	8-pin O.	8E	12.6	0.15	Class-A Amplifier	Characteristics same as 6B8—Table I										12C8
12E5GT	Triode Amplifier	6-pin O.	6Q	12.6	0.15	Class-A Amplifier	250	−13.5	——	——	5.0	——	1450	13.8	——	——	12E5GT
12F5GT	Triode Amplifier	5-pin O.	5M	12.6	0.15	Class-A Amplifier	Characteristics same as 6F5—Table I										12F5GT
12G7G	Duplex-Diode Triode	7-pin O.	7V	12.6	0.15	Class-A Amplifier	250	− 3.0	——	——	——	58000	1200	70	——	——	12G7G
12H6	Twin Diode	7-pin O.	6Q	12.6	0.15	Rectifier	Characteristics same as 6H6—Table I										12H6
12J5GT	Triode Amplifier	6-pin O.	6Q	12.6	0.15	Class-A Amplifier	Characteristics same as 6J5—Table I										12J5GT
12J7GT	Pentode Voltage Amplifier	7-pin O.	7R	12.6	0.15	Class-A Amplifier	Characteristics same as 6J7—Table I										12J7GT
12K7GT	Remote Cut-off Pentode	7-pin O.	7R	12.6	0.15	R.F. Amplifier	Characteristics same as 6K7—Table I										12K7GT
12K8	Triode Hexode Converter	8-pin O.	8K	12.6	0.15	Osc.-Mixer	Characteristics same as 6K8—Table I										12K8

TABLE IX — HIGH-VOLTAGE HEATER TUBES — *Continued*

Type	Name	Base [3]	Socket Connections [1]	Heater Volts	Heater Amps.	Use	Plate Supply Volts	Grid Bias	Screen Volts	Screen Current Ma.	Plate Current Ma.	Plate Resistance, Ohms	Transconductance Micromhos	Amp. Factor	Load Resistance Ohms	Power Output Watts	Type
12Q7GT	Duplex-Diode Triode	7-pin O.	7V	12.6	0.15	Class-C Amplifier	Characteristics same as 6Q7—Table I										12Q7GT
12SA7	Pentagrid Converter	8-pin O.	8R	12.6	0.15	Osc.-Mixer	Characteristics same as 6SA7—Table I										12SA7
12SC7	Twin Triode	8-pin O.	8S	12.6	0.15	Class-A Amplifier	Characteristics same as 6SC7 — Table I										12SC7
12SF5	High-μ Triode	6-pin O.	8P	12.6	0.15	Class-A Amplifier	Characteristics same as 6SF5 — Table I										12SF5
12SF7	Diode Variable-μ Pentode	8-pin O.	7AZ	12.6	0.15	Class-A Amplifier	Characteristics same as 6SF7 — Table I										12SF7
12SG7	Triple-Grid Variable-μ	8-pin O.	8BC	12.6	0.15	Class-A Amplifier	Characteristics same as 6SG7 — Table I										12SG7
12SH7	H-F Amplifier Pentode	8-pin O.	8BK	12.6	0.15	H-F Amplifier	Characteristics same as 6SH7 — Table I										12SH7
12SJ7	Pentode Voltage Amplifier	8-pin O.	8N	12.6	0.15	Class-A Amplifier	Characteristics same as 6SJ7—Table I										12SJ7
12SK7	Remote Cut-off Pentode	8-pin O.	8N	12.6	0.15	R.F. Amplifier	Characteristics same as 6SK7—Table I										12SK7
12SL7GT	Twin Triode	8-pin O.	8BD	12.6	0.15	Class-A Amplifier	Characteristics same as 6SL7GT—Table II										12SL7GT
12SN7GT	Twin Triode	8-pin O.	8BD	12.6	0.3	Class-A Amplifier	Characteristics same as 6SN7GT—Table II										12SN7GT
12SQ7	Duplex-Diode Triode	8-pin O.	8Q	12.6	0.15	Class-A Amplifier	Characteristics same as 6SQ7—Table I										12SQ7
12SR7	Duplex-Diode Triode	8-pin O.	8Q	12.6	0.15	Class-A Amplifier	Characteristics same as 6R7—Table I										12SR7
14A4	Triode Amplifier	8-pin L.	5AC	14[4]	0.16	Class-A Amplifier	Characteristics same as 7A4—Table III										14A4
14A5	Beam Power Amplifier	8-pin L.	6AA	14[4]	0.16	Class-A Amplifier	250	−12.5	250	3.5/5.5	30/32	70000	3000	—	7500	2.8	14A5
14A7/ 12B7	Triple-Grid Variable-μ	8-pin L.	8V	14[4]	0.16	Class-A Amplifier	250	− 3.0	100	2.6	9.2	800000	2000	—	—	—	14A7/ 12B7
14B6	Duplex-Diode Triode	8-pin L.	8W	14[4]	0.16	Class-A Amplifier	Characteristics same as 7B6—Table III										14B6
14B8	Pentagrid Converter	8-pin L.	8X	14[4]	0.16	Osc.-Mixer	Characteristics same as 7B8—Table III										14B8
14C5	Beam Power Amplifier	8-pin L.	6AA	14[4]	0.24	Class-A Amplifier	Characteristics same as 6V6—Table I										14C5
14C7	Triple-Grid Amplifier	8-pin L.	8V	14[4]	0.16	Class-A Amplifier	250	− 3.0	100	0.7	2.2	1000000	1575	—	—	—	14C7
14E6	Duplex-Diode Triode	8-pin L.	8W	14[4]	0.16	Class-A Amplifier	Characteristics same as 7E6—Table III										14E6
14E7	Duplex-Diode Pentode	8-pin L.	8AE	14[4]	0.16	Class-A Amplifier	Characteristics same as 7E7—Table III										14E7
14F7	Twin Triode	8-pin L.	8AC	14[4]	0.16	Class-A Amplifier	Characteristics same as 7F7—Table III										14F7
14H7	Triple-Grid Semi-Variable-μ	8-pin L.	8V	14[4]	0.16	Class-A Amplifier	250	− 2.5	150	3.5	9.5	800000	3800	—	—	—	14H7
14J7	Triode-Hexode Converter	8-pin L.	8AR	14[4]	0.16	Osc.-Mixer	Characteristics same as 7J7—Table III										14J7
14N7	Twin Triode	8-pin L.	8AC	14[4]	0.16	Class-A Amplifier	Characteristics same as 7N7—Table III										14N7
14Q7	Heptode Pentagrid Converter	8-pin L.	8AL	14[4]	0.16	Osc.-Mixer	Characteristics same as 7Q7—Table III										14Q7
14R7	Duplex-Diode Pentode	8-pin L.	8AE	14[4]	0.16	Class-A Amplifier	Characteristics same as 7R7—Table III										14R7
20J8GM[3]	Triode Heptode Converter	8-pin O.	8H	20	0.15	Osc.-Mixer	250	− 3.0	100	3.4	1.5	Triode Plate (No. 6) 100 v. 1.5 ma.					20J8GM
21A7	Triode Hexode Converter	8-pin L.	8AR	21	0.16	Osc.-Mixer	250 150	− 3.0 − 3.0	100 Triode	2.8	1.3 3.5	— —	275 1900	— 32	— —	— —	21A7
25A6	Pentode Power Amplifier	7-pin O.	7S	25	0.3	Class-A Amplifier	135	−20.0	135	8	37	35000	2450	85	4000	2.0	25A6
25A7G	Rectifier-Amplifier[5]	8-pin O.	8F	25	0.3	Class-A Amplifier	100	−15.0	100	4.0	20.5	50000	1800	90	4500	0.77	25A7G
25AC5G	Triode Power Amplifier	6-pin O.	6Q	25	0.3	Class-A Amplifier	110	+15.0	—	—	45	—	3800	58	2000	2.0	25AC5G
							165	Used in dynamic-coupled circuit with 6AF5G driver							3500	3.3	
25B5	Direct-Coupled Triodes	6-pin S.	6D	25	0.3	Class-A Amplifier	110	0	110	7	45	11400	2200	25	2000	2.0	25B5
25B6G	Pentode Power Amplifier	7-pin O.	7S	25	0.3	Class-A Amplifier	95	−15.0	95	4	45	—	4000	—	2000	1.75	25B6G
25B8GT	Triode Pentode	8-pin O.	8T	25	0.15	Class-A Amplifier	Characteristics same as 12B8GT										25B8GT
25C6G	Beam Power Amplifier	7-pin O.	7AC	25	0.3	Class-A Amplifier	135	−13.5	135	3.5/11.5	58/60	9300	7000	—	2000	3.6	25C6G

TABLE IX — HIGH-VOLTAGE HEATER TUBES — *Continued*

Type	Name	Base [3]	Socket Connections [1]	Heater Volts	Heater Amps.	Use	Plate Supply Volts	Grid Bias	Screen Volts	Screen Current Ma.	Plate Current Ma.	Plate Resistance, Ohms	Transconductance Micromhos	Amp. Factor	Load Resistance Ohms	Power Output Watts	Type
25D8GT	Diode Triode Pentode	8-pin O.	8AF	25	0.15	Triode Amplifier	100	— 1.0	—	—	0.5	91000	1100	100	—	—	25D8GT
						Pentode Amplifier	100	— 3.0	100	2.7	8.5	200000	1900	—	—	—	
25L6	Beam Power Amplifier	7-pin O.	7AC	25	0.3	Class-A Amplifier	110	— 8.0	110	3.5–10.5	45–48	10000	8000	80	2000	2.2	25L6
25N6G	Direct-Coupled Triodes	7-pin O.	7W	25	0.3	Class-A Amplifier	110	0	110	7	45	11400	2200	25	2000	2.0	25N6G
32L7GT	Diode-Beam Tetrode [5]	8-pin O.	8F	32.5	0.3	Class-A Amplifier	110	— 7.5	110	3	40	15000	6000	—	2500	1.5	32L7GT
35A5	Beam Power Amplifier	8-pin L.	6AA	35	0.15	Class-A Amplifier	110	— 7.5	110	3/7	40/41	14000	5800	—	2500	1.5	35A5
35L6G	Beam Power Amplifier	7-pin O.	7AC	35	0.15	Class-A Amplifier	110	— 7.5	110	3/7	40/41	13800	5800	—	2500	1.5	35L6G
43	Pentode Power Amplifier	6-pin M.	6B	25.0	0.3	Class-A Amplifier	95	—15.0	95	4.0	20.0	45000	2000	90	4500	0.90	43
48	Tetrode Power Amplifier	6-pin M.	6A	30.0	0.4	Class-A Amplifier	96	—19.0	96	9.0	52.0	—	3800	—	1500	2.0	48
50A5	Beam Power Amplifier	8-pin L.	6AA	50	0.15	Class-A Amplifier	110	— 7.5	110	4/11	49/50	10000	8200	—	2000	2.2	50A5
50C6G	Beam Power Amplifier	7-pin O.	7AC	50	0.15	Class-A Amplifier	135	—13.5	135	3.5/11.5	58/60	9300	7000	—	2000	3.6	50C6GT
50L6GT	Beam Power Amplifier	7-pin O.	7AC	50	0.15	Class-A Amplifier	110	— 7.5	110	4/11	49/50	—	8200	82	2000	2.2	50L6GT
70A7GT	Diode-Beam Tetrode [5]	8-pin O.	8AA	70	0.15	Class-A Amplifier	110	— 7.5	110	3.0	40	—	5800	80	2500	1.5	70A7GT
70L7GT	Diode-Beam Tetrode [5]	8-pin O.	8AA	70	0.15	Class-A Amplifier	110	— 7.5	110	3/6	40/43	15000	7500	—	2000	1.8	70L7GT
117L7GT/ 117M7GT	Rectifier-Amplifier [5]	8-pin O.	8AO	117	0.09	Class-A Amplifier	105	— 5.2	105	4/5.5	43	17000	5300	—	4000	0.85	117L7GT/ 117M7GT
117N7GT	Rectifier-Amplifier [5]	8-pin O.	8AV	117	0.09	Class-A_1 Amplifier	100	— 6.0	100	5.0	51	16000	7000	—	3000	1.2	117N7GT
117P7GT	Rectifier-Amplifier [5]	8-pin O.	8AV	117	0.09	Class-A Amplifier	105	— 5.2	105	4/5.5	43	17000	5300	—	4000	0.85	117P7GT
1629	Electron-Ray Tube	7-pin O.	6RA	12.6	0.15	Indicator Tube	Characteristics same as 6E5—Table IV										1629
1631	Beam Power Amplifier	7-pin O.	7AC	12.6	0.45	Class-A Amplifier	Characteristics same as 6L6—Table I										1631
1632	Beam Power Amplifier	7-pin-O.	7AC	12.6	0.6	Class-A Amplifier	Characteristics same as 25L6										1632
1633	Twin Triode	8-pin-O.	8BD	25	0.15	Class-A Amplifier	Characteristics same as 6SN7GT—Table II										1633
1634	Twin Triode	8-pin-O.	8S	12.6	0.15	Class-A Amplifier	Characteristics same as 6SC7—Table I										1634
XXD	Twin Triode	8-pin L.	8AC	12.6	0.15	Class-A Amplifier	250	— 10	—	—	9.0	—	2100	16	—	—	XXD

[1] Refer to Receiving Tube Diagrams.
[2] M. — medium; S. — small; O. — octal; L. — loktal.
[3] Metal-sprayed glass envelope.
[4] Maximum rating, corresponding to 130-volt line condition; normal rating is 12.6 v. for 117-v. line.
[5] For rectifier data, see Table XIII.

TABLE X — SPECIAL RECEIVING TUBES

Type	Name	Base [2]	Socket Connections [1]	Cathode	Fil. or Heater Volts	Fil. or Heater Amps.	Use	Plate Supply Volts	Grid Bias	Screen Volts	Screen Current Ma.	Plate Current Ma.	Plate Resistance, Ohms	Transconductance Micromhos	Amp. Factor	Load Resistance Ohms	Power Output Watts	Type
00-A	Triode Detector	4-pin M.	4D	Fil.	5.0	0.25	Grid Leak Detector	45	—	—	—	1.5	30000	666	20	—	—	00-A
01-A	Triode Detector Amplifier	4-pin M.	4D	Fil.	5.0	0.25	Class-A Amplifier	135	— 9.0	—	—	3.0	10000	800	8.0	—	—	01-A
3A8GT	Diode Triode Pentode	8-pin O.	8AS	Fil. [6]	1.4	0.1	Class-A Triode	90	0	—	—	0.15	240000	275	65	—	—	3A8GT
					2.8	0.05	Class-A Pentode	90	0	90	0.3	1.2	600000	750	—	—	—	
3B5GT	Beam Power Amplifiers	7-pin O.	7AP	Fil. [6]	1.4 2.8	0.1 0.05	Class-A Amplifier	67.5	— 7.0	67.5	0.6 0.5	8.0 6.7	100000	1650 1500	—	5000	0.2 0.18	3B5GT
3C5GT	Power Output Pentode	7-pin O.	7AQ	Fil. [6]	1.4 2.8	0.1 0.05	Class-A Amplifier	90	— 9.0	90	1.4	6.0	—	1550 1450	—	8000 10000	0.24 0.26	3C5GT
3LE4	Power Amplifier Pentode	8-pin L.	6BA	Fil.	2.8	0.050	Class-A Amplifier	90	— 9.0	90	1.8	9.0	110000	1600	—	6000	0.30	3LE4

TABLE X — SPECIAL RECEIVING TUBES — *Continued*

Type	Name	Base [2]	Socket Connections [1]	Cathode	Fil. or Heater Volts	Fil. or Heater Amps.	Use	Plate Supply Volts	Grid Bias	Screen Volts	Screen Current Ma.	Plate Current Ma.	Plate Resistance, Ohms	Transconductance Micromhos	Amp. Factor	Load Resistance Ohms	Power Output Watts	Type
3Q4	Power Amplifier Pentode	7-pin O.[8]	7BA	Fil.[6]	1.4 2.8	0.1 0.05	Class-A Amplifier	90	— 4.5	90	2.1 1.7	9.5 7.7	100000 120000	2150 2000	—	10000	0.27 0.24	3Q4
3Q5GT	Beam Power Amplifier	7-pin O.	7AP	Fil.[6]	1.4 2.8	0.1 0.05	Class-A Amplifier	90	— 4.5	90	1.6 1.0	9.5 7.5	—	2100 1800	—	8000	0.27 0.25	3Q5GT
3S4	Power Amplifier Pentode	7-pin B.[8]	7BA	Fil.[6]	1.4 2.8	0.1 0.05	Class-A Amplifier	90	— 7.0	67.5	1.4 1.1	7.4 6.1	100000	1575 1425	—	8000	0.27 0.235	3S4
10	Triode Power Amplifier	4-pin M.	4D	Fil.	7.5	1.25	Class-A Amplifier	425	—39.0	—	—	18.0	5000	1600	8.0	10200	1.6	10
11/12	Triode Detector Amplifier	4-pin M.	4D	Fil.	1.1	0.25	Class-A Amplifier	135	—10.5	—	—	3.0	15000	440	6.6	—	—	11/12
20	Triode Power Amplifier	4-pin S.	4D	Fil.	3.3	0.132	Class-A Amplifier	135	—22.5	—	—	6.5	6300	525	3.3	6500	0.110	20
22	Tetrode R.F. Amplifier	4-pin M.	4K	Fil.	3.3	0.132	R.F. Amplifier	135	— 1.5	67.5	1.3	3.7	325000	500	160	—	—	22
26	Triode Amplifier	4-pin M.	4D	Fil.	1.5	1.05	Class-A Amplifier	180	—14.5	—	—	6.2	7300	1150	8.3	—	—	26
40	Triode Voltage Amplifier	4-pin M.	4D	Fil.	5.0	0.25	Class-A Amplifier	180	— 3.0	—	—	0.2	150000	200	30	—	—	40
4A6G	Twin Triode Amplifier	8-pin O.	8L	Fil.[6]	4[3]	0.06	Class-A Amplifier[4]	90	— 1.5	—	—	2.2	13300	1500	20	—	—	4A6G
					2[3]	0.12	Class-B Amplifier	90	0	—	—	4.6[5]	—	—	—	8000	1.0	
50	Triode Power Amplifier	4-pin M.	4D	Fil.	7.5	1.25	Class-A Amplifier	450	—84.0	—	—	55.0	1800	2100	3.8	4350	4.6	50
71-A	Triode Power Amplifier	4-pin M.	4D	Fil.	5.0	0.25	Class-A Amplifier	180	—43.0	—	—	20.0	1750	1700	3.0	4800	0.790	71-A
99	Triode Detector Amplifier	4-pin S.	4D	Fil.	3.3	0.063	Class-A Amplifier	90	— 4.5	—	—	2.5	15500	425	6.6	—	—	99
112A	Triode Detector Amplifier	4-pin M.	4D	Fil.	5.0	0.25	Class-A Amplifier	180	—13.5	—	—	7.7	4700	1800	8.5	—	—	112A
182B/ 482B	Triode Amplifier	4-pin M.	4D	Fil.	5.0	1.25	Class-A Amplifier	250	—35.0	—	—	18.0	—	1500	5.0	—	—	182B/ 482B
183/ 483	Power Triode	4-pin M.	4D	Fil.	5.0	1.25	Class-A Amplifier	250	60.0	—	—	25.0	18000	1800	3.2	4500	2.0	183/ 483
257	Power Pentode	5-pin M.	5B	Fil.	5.0	0.30	Class-A Amplifier	110	21.5	110	7.0	20.0	41000	1350	55	6000	0.8	257
485	Triode	5-pin S.	5A	Htr.	3.0	1.30	Class-A Amplifier	180	9.0	—	—	6.0	9300	1350	12.5	—	—	485
864	Triode Amplifier	4-pin S.	4D	Fil.	1.1	0.25	Class-A Amplifier	90	— 4.5	—	—	2.9	13500	610	8.2	—	—	864
954[7]	Pentode Detector, Amplifier	Special	A[7]	Htr.	6.3	0.15	Class-A Amplifier	250	— 3.0	100	0.7	2.0	1.5 megohms	1400	2000	—	—	954
							Bias Detector	250	— 6.0	100	—	Plate current to be adjusted to 0.1 ma. with no signal					—	
955[7]	Triode Detector, Amplifier	Special	B[7]	Htr.	6.3	0.16	Class-A Amplifier	180	— 5.0	—	—	4.5	12500	2000	25	20000	0.135	955
							Oscillator	180	—35.0	—	—	7.0	D.C. Grid Current App. 1.5 ma.			—	0.5	
956[7]	Triple-Grid Variable-μ R.F. Amplifier	Special	A[7]	Htr.	6.3	0.15	R.F. Amplifier	250	— 3.0	100	1.8	5.5	800000	1800	1440	—	—	956
							Mixer	250	—10.0	100	—	—	Oscillator peak volts — 7 min.					
957[7]	Triode Det., Amp., Osc.	Special	C[7]	Fil.	1.25	0.05	Class-A Amplifier	135	— 5.0	—	—	2.0	24600	650	16	—	—	957
958[7]	Triode A.F. Amp., Osc.	Special	C[7]	Fil.	1.25	0.1	Class-A Amplifier	135	— 7.5	—	—	3.0	10000	1200	12	—	—	958
959[7]	Pentode Det., Amplifier	Special	D[7]	Fil.	1.25	0.05	Class-A Amplifier	135	— 3.0	67.5	0.4	1.7	800000	600	480	—	—	959
1609	Pentode Amplifier	5-pin S.	5B	Fil.	1.1	0.25	Class-A Amplifier	135	2.5	67.5	0.65	2.5	400000	725	300	—	—	1609
9001	Triple-Grid Detector, Amplifier	7-pin B.[8]	7AS	Htr.	6.3	0.15	Class-A Amplifier	250	— 3.0	100	0.7	2.0	Over 1 meg.	1400	—	—	—	9001
							Mixer	250	— 5.0	100	Osc. peak voltage 4 volts			550	—	—	—	
9002	Triode Det., Amp., Osc. Triple-Grid Variable-μ	7-pin B.[8]	7AW	Htr.	6.3	0.15	Class-A Amplifier	250	— 7.0	—	—	6.3	11400	2200	25	—	—	9002
							Class-A Amplifier	250	— 3.0	100	2.7	6.7	700000	1800	—	—	—	
9003	R.F. Amplifier	7-pin B.[8]	7AS	Htr.	6.3	0.15	Mixer	250	—10.0	100	Osc. peak voltage 9 volts			600	—	—	—	9003
M54	Tetrode Power Amplifier	None [9]	—	Fil.	0.625[10]	0.04	Class-A Amplifier	30	0	30	0.06	0.5	130000	200	26	35000	0.005	M54
M64	Tetrode Voltage Amplifier	None [9]	—	Fil.	0.625[10]	0.02	Class-A Amplifier	30	0	—	—	0.03	200000	110	25	—	—	M64
M74	Tetrode Voltage Amplifier	None [9]	—	Fil.	0.625[10]	0.02	Class-A Amplifier	30	0	7.0	0.01	0.02	500000	125	70	—	—	M74

[1] Refer to Receiving Tube Diagrams.
[2] M. — Medium; S. — Small; O. — Octal; L. — Loktal.
[3] Cathode terminal is mid-point of filament; use series connection with 4 volts, parallel with 2 volts.
[4] Triodes connected in parallel.
[5] Idling current, both plates.
[6] Filament mid-point tap permits series or parallel connection.
[7] "Acorn" type; miniature unbased tubes for ultra-high frequencies. See Acorn Tube Socket Connections.
[8] Special 7-pin "button" base, miniature type.
[9] No base; tinned wire leads. Dimensions 0.36 x 1.10".
[10] Intended for series-parallel operation on 1.4-volt dry cell.

TABLE XI — CONTROL AND REGULATOR TUBES

Type	Name	Base [1]	Socket Connections [2]	Cathode	Fil. or Heater Volts	Fil. or Heater Amps.	Use	Peak Anode Voltage	Max. Anode Current [3]	Minimum Starting Voltage	Operating Voltage	Operating Current [3]	Grid Resistor	Tube Voltage Drop	Type
0A4G	Gas Triode	6-pin O.	4V	Cold	—	—	Cold-Cathode Starter-Anode Relay Tube	With 105–120-volt a.c. anode supply, peak starter-anode a.c. voltage is 70, peak r.f. voltage 55							0A4G
2A4G	Thyratron	8-pin O.	5S	Fil.	2.5	2.5	Control Tube	200	100	—	—	—	—	15	2A4G
874	Voltage Regulator	4-pin M.	4S	—	—	—	Voltage Regulator [5]	—	—	125	90	10–50	—	—	874
876	Current Regulator	Mogul	—	—	—	—	Current Regulator [5]	—	—	—	40–60	1.7	—	—	876
884	Gas Triode	6-pin O.	6Q	Htr.	6.3	0.6	Sweep Circuit Oscillator	300	300	—	—	2	25000 [4]	—	884
							Grid-Controlled Rectifier	350	300	—	—	75	25000 [4]	—	
885	Gas Triode	5-pin S.	5A	Htr.	2.5	1.4	Same as Type 884	Characteristics same as Type 884							885
886	Current Regulator	Mogul	—	—	—	—	Current Regulator [5]	—	—	—	40–60	2.05	—	—	886
967	Mercury Vapor Triode	4-pin M.	F [10]	Fil.	2.5	5.0	Grid-Controlled Rectifier	2500	500	— 5 [11]	—	—	—	10–24	967
991	Voltage Regulator	Bayonet [14]	—	—	—	—	Voltage Regulator	—	—	87	48–67	2.0	—	—	991
2050	Gas Tetrode	8-pin O.	8BA	Htr.	6.3	0.6	Grid-Controlled Rectifier	650	100	— 4 [12]	—	—	0.1–10 meg.	8	2050
2051	Gas Tetrode	8-pin O.	8BA	Htr.	6.3	0.6	Grid-Controlled Rectifier	350	75	— 4 [13]	—	—	0.1–10 meg.	14	2051
KY21	Gas Triode	4-pin M.	—	Fil.	2.5	10.0	Grid-Controlled Rectifier	—	—	—	3000	500	—	—	KY21
RK62	Gas Triode	4-pin S.	4D	Fil.	1.4	0.05	Relay Tube [6]	45	1.5	—	30–45	0.1–1.5	—	15	RK62
RM208	Permatron	4-pin M.	—	Fil.	2.5	5.0	Controlled Rectifier [7]	7500 [8]	1000	—	—	—	—	15	RM208
RM209	Permatron	4-pin M.	—	Fil.	5.0	10.0	Controlled Rectifier [7]	7500 [8]	5000	—	—	—	—	15	RM209
VR75-30	Voltage Regulator	6-pin O.	4SB	—	—	—	Voltage Regulator	—	—	105	75	5–30 [9]	—	—	VR75-30
VR90	Voltage Regulator	7-pin O.	4SA	—	—	—	Voltage Regulator	—	—	125	90	10–30 [9]	—	—	VR90
VR105-30	Voltage Regulator	6-pin O.	4SB	—	—	—	Voltage Regulator	—	—	137	105	5–30 [9]	—	—	VR105-30
VR150-30	Voltage Regulator	6-pin O.	4SB	—	—	—	Voltage Regulator	—	—	180	150	5–30 [9]	—	—	VR150-30
KY866	Mercury Vapor Triode	4-pin M.	F [10]	Fil.	2.5	5.0	Grid-Controlled Rectifier	10000	1000	—100–150	—	—	—	—	KY866

[1] M. — Medium; S. — Small; O. — Octal.
[2] Refer to Receiving Tube Diagrams.
[3] In ma.
[4] Not less than 1000 ohms per grid volt; 500,000 ohms max.
[5] For use in series with power transformer primary.
[6] For use as self-quenching super-regenerative detector with high-resistance relay (5000–10000 ohms) in anode circuit.
[7] For use as grid-controlled rectifier or with external magnetic control. RM-208 has characteristics of 866, RM-209 of 872.
[8] When under control peak inverse rating is reduced to 2500.
[9] Sufficient resistance must be used in series with tube to limit current to 30 ma.
[10] Refer to Transmitting Tube Diagrams.
[11] At 1000 anode volts.
[12] At 350 anode volts and O Grid No. 2 volts.
[13] At 650 anode volts and O Grid No. 2 volts.
[14] Candelabra type, double contact.

TABLE XII — CATHODE-RAY TUBES AND KINESCOPES

Type	Name	Socket Connections [1]	Heater Volts	Heater Amps.	Use	Size	Anode No. 2 Voltage	Anode No. 1 Voltage	Cut-Off Grid Voltage [2]	Grid No. 2 Voltage	Signal-Swing Voltage	Max. Input Voltage [3]	Screen Input Power [4]	Deflection Sensitivity [5] D_1 D_2	Deflection Sensitivity [5] D_3 D_4	Screen Persistence [6]	Pattern Color [6]	Type
3AP1/ 906-P1 3AP4/ 906-P4	Electrostatic Cathode-Ray	7N	2.5	2.1	Oscillograph Television	3"	1500	475	— 70	—	—	600	10	0.22	0.23	P1	Green	3AP1/ 906-P1
							1000	285		—	—			0.33	0.35			
							600	170		—	—			0.55	0.58	P4	White	3AP4/ 906-P4
							400	128		—	—			0.81	0.87			

TABLE XII — CATHODE-RAY TUBES AND KINESCOPES — *Continued*

Type	Name	Socket Connections [1]	Heater Volts	Heater Amps.	Use	Size	Anode No. 2 Voltage	Anode No. 1 Voltage	Cut-Off Grid Voltage [2]	Grid No. 2 Voltage	Signal-Swing Voltage	Max. Input Voltage [3]	Screen Input Power [4]	Deflection Sensitivity [5] D_1 D_2	Deflection Sensitivity [5] D_3 D_4	Screen Persistence [6]	Pattern Color [6]	Type
5AP1/1805-P1 5AP4/1805-P4	Electrostatic Picture Tube	10A	6.3	0.6	Oscillograph Television	5″	2000	575	— 86	—	—	500	10	0.17	0.21	P1	Green	5AP1/1805-P1
							1500	430	— 64					0.23	0.28	P4	White	5AP4/1805-P4
5BP1/1802-P1 5BP4/1802-P4	Electrostatic Picture Tube	10A	6.3	0.6	Oscillograph Television	5″	2000	425	— 85	—	—	500	10	0.3	0.33	P1	Green	5BP1/1802-P1
							1500	310	— 62	—	—			0.4	0.44	P4	White	5BP4/1802-P4
							1200	250	— 50	—	—			0.5	0.55			
7AP4	Electromagnetic Picture Tube	5AJ	2.5	2.1	Television	7″	3500	1000	−67.5	—	—	—	2.5	—	—	P4	White	7AP4
9AP4/1804-P4	Electromagnetic Picture Tube	6AL	2.5	2.1	Television	9″	7000	1425	— 75	250	25	—	10	—	—	P4	White	9AP4/1804-P4
							6000	1225										
9CP4	Electromagnetic Picture Tube	4AF	2.5	2.1	Television	9″	7000	—	−110	—	25	—	10	—	—	P4	White	9CP4
12AP4/1803-P4	Electromagnetic Picture Tube	6AL	2.5	2.1	Television	12″	7000	1460	— 75	250	25	—	10	—	—	P4	White	12AP4/1803-P4
							6000	1240										
12CP4	Electromagnetic Picture Tube	4AF	2.5	2.1	Television	12″	7000	—	−110	—	25	—	10	—	—	P4	White	12CP4
902	Electrostatic Cathode-Ray	A [9]	6.3	0.6	Oscillograph	2″	600	150	— 80	—	—	350	5	0.19	0.22	P1	Green	902
903	Electromagnetic Cathode-Ray	6AL	2.5	2.1	Oscillograph	9″	7000	1360	−120	250	—	—	10	—	—	P1	Green	903
904	Electrostatic-Magnetic Cathode-Ray	C [9]	2.5	2.1	Oscillograph	5″	4600	970	−140	250	—	4000	10	0.09	—	P1	Green	904
905	Electrostatic Cathode-Ray	D [9]	2.5	2.1	Oscillograph	5″	2000	450	— 60	—	—	1000	10	0.19	0.23	P1	Green	905
907	Electrostatic Cathode-Ray	D [9]	2.5	2.1	Oscillograph	5″	Characteristics same as Type 905							—	—	P5	Blue	907
908	Electrostatic Cathode-Ray	7N	2.5	2.1	Oscillograph	3″	Characteristics same as Type 906/5AP1							—	—	P5	Blue	908
909	Electrostatic Cathode-Ray	D [9]	2.5	2.1	Oscillograph	5″	Characteristics same as Type 905							—	—	P2	Blue	909
910	Electrostatic Cathode-Ray	7N	2.5	2.1	Oscillograph	3″	Characteristics same as Type 906/5AP1							—	—	P2	Blue	910
911	Electrostatic Cathode-Ray	7N	2.5	2.1	Oscillograph	3″	Characteristics same as Type 906/5AP1 [7]							—	—	P1	Green	911
912	Electrostatic Cathode-Ray	F [9]	2.5	2.1	Oscillograph	5″	10000	2000	−125	250	—	7000	10	0.041	0.051	P1	Green	912
913	Electrostatic Cathode-Ray	A [9]	6.3	0.6	Oscillograph	1″	500	100	— 90	—	—	250	5	0.07	0.10	P1	Green	913
914	Electrostatic Cathode-Ray	G [9]	2.5	2.1	Oscillograph	9″	7000	1500	−125	250	—	3000	10	0.073	0.093	P1	Green	914
1800	Electromagnetic Kinescope	6AL	2.5	2.1	Television	9″	6000	1250	— 75	250	25	—	10	—	—	P3	Yellow	1800
1801	Electromagnetic Kinescope	H [9]	2.5	2.1	Television	5″	3000	450	— 35	—	20	—	10	—	—	P3	Yellow	1801
2002	Electrostatic Cathode-Ray	A [9]	6.3	0.6	Oscillograph	2″	600	120	—	—	—	—	—	0.16	0.17	Med.	Green	2002
2005	Electrostatic Cathode-Ray	A [8 9]	2.5	2.1	Television	5″	2000	1000	— 35	200	—	—	10	0.5	0.56	—	—	2005
24-XH	Electrostatic Cathode-Ray	A [9]	6.3	0.6	Oscilloscope	2″	600	120	— 60	—	—	—	10	0.14	0.16	Short	Green	24-XH

[1] Refer to Receiving Tube Diagrams.
[2] For current cut-off. Control grid should never be allowed to go positive.
[3] Between Anode No. 2 and any deflecting plate.
[4] In mw./sq. cm., max.
[5] In mm./volt d.c.
[6] Phosphorescent material used in screen determines persistence. P1 is phosphor of medium persistence, P2 long, P3 also medium but especially suited for television, P4 same as P3 but white, and P5 short persistence for oscillographic use.
[7] The 911 is identical to 906 except for the gun material, which is designed to be especially free from magnetization effects.
[8] Cathode connected to pin 7.
[9] Refer to Cathode-Ray Tube Base Diagrams.

TABLE XIII — RECTIFIERS — RECEIVING AND TRANSMITTING

See also Table XI — Control and Regulator Tubes

Type No.	Name	Base [2]	Socket Connections [1]	Cathode	Fil. or Heater		Max. A.C. Voltage Per Plate	Max. D.C. Output Current Ma.	Max. Inverse Peak Voltage	Max. Peak Plate Current Ma.	Type [7]
					Volts	Amps.					
BA	Full-Wave Rectifier	4-pin M.	4J	Cold	—	—	350	350	Tube drop 80 v.		G
BH	Full-Wave Rectifier	4-pin M.	4J	Cold	—	—	350	125	Tube drop 90 v.		G
BR	Half-Wave Rectifier	4-pin M.	4J	Cold	—	—	300	50	Tube drop 60 v.		G
OZ4	Full-Wave Rectifier	6-pin O.	4R	Cold	—	—	350	30–75	1250	200	G
1 [5]	Half-Wave Rectifier	4-pin S.	4G	Htr.	6.3	0.3	350	50	1000	400	M
1-V [5]	Half-Wave Rectifier	4-pin S.	4G	Htr.	6.3	0.3	350	50	—	—	V
2V3G	Half-Wave Rectifier	6-pin O.	6BA	Fil.	2.5	5.0	—	2.0	16500	12	V
2W3	Half-Wave Rectifier	5-pin O.	4X	Fil.	2.5	1.5	350	55	—	—	V
2X2	Half-Wave Rectifier	4-pin M.	4B	Fil.	2.5	1.75	4500 [11]	7.5	—	—	V
2Y2	Half-Wave Rectifier	4-pin M.	4P	Fil.	2.5	1.75	4400 [11]	5.0	—	—	V
2Z2	Half-Wave Rectifier	4-pin M.	4B	Fil.	2.5	1.5	350	50	—	—	V
5T4 [3]	Full-Wave Rectifier	5-pin O.	5T	Fil.	5.0	3.0	450	250	1250	800	V
5U4G	Full-Wave Rectifier	8-pin O.	5T	Fil.	5.0	3.0	Same as Type 5Z3				V
5V4G	Full-Wave Rectifier	8-pin O.	5L	Htr.	5.0	2.0	Same as Type 83V				V
5W4	Full-Wave Rectifier	5-pin O.	5T	Fil.	5.0	1.5	350	110	1000	—	V
5X3	Full-Wave Rectifier	4-pin M.	4C	Fil.	5.0	2.0	1275	30	—	—	V
5X4G	Full-Wave Rectifier	8-pin O.	5Q	Fil.	5.0	3.0	Same as 5Z3				V
5Y3G	Full-Wave Rectifier	5-pin O.	5T	Fil.	5.0	2.0	Same as Type 80				V
5Y4G	Full-Wave Rectifier	8-pin O.	5Q	Fil.	5.0	2.0	Same as Type 80				V
5Z3	Full-Wave Rectifier	4-pin M.	4C	Fil.	5.0	3.0	500	250	1400	—	V
5Z4 [3]	Full-Wave Rectifier	5-pin O.	5L	Htr.	5.0	2.0	400	125	1100	—	V
6W5G	Full-Wave Rectifier	6-pin O.	6S	Htr.	6.3	0.9	350	100	1250	350	V
6X5 [3]	Full-Wave Rectifier	6-pin O.	6S	Htr.	6.3	0.5	350	75	—	—	V
6Y5	Full-Wave Rectifier	6-pin S.	6J	Htr.	6.3	0.8	350	50	—	—	V
6Z3	Half-Wave Rectifier	4-pin M.	4G	Fil.	6.3	0.3	350	50	—	—	V
6Z4	Full-Wave Rectifier	5-pin S.	5D	Htr.	6.3	0.5	350	50	—	—	V
6Z5	Full-Wave Rectifier	6-pin S.	6K	Htr.	6.3	0.6	230	60	—	—	V
6ZY5G	Full-Wave Rectifier	6-pin O.	6S	Htr.	6.3	0.3	350	35	1000	150	V
7Y4	Full-Wave Rectifier	8-pin L.	5AB	Htr.	7.0 [12]	0.53	350	60	—	—	V
7Z4	Full-Wave Rectifier	8-pin L.	5AB	Htr.	7.0 [12]	0.96	450 [6] 325 [10]	100	1250	300	V
12A7	Rectifier-Pentode [14]	7-pin S.	7K	Htr.	12.6	0.3	125	30	—	—	V
12Z3	Half-Wave Rectifier	4-pin S.	4G	Htr.	12.6	0.3	250	60	—	—	V
12Z5	Voltage-Doubling Rectifier	7-pin M.	7L	Htr.	12.6	0.3	225	60	—	—	V
14Y4	Full-Wave Rectifier	8-pin L.	5AB	Htr.	14.0 [12]	0.32	450 [6] 325 [10]	70	1250	210	V
14Z3	Half-Wave Rectifier	4-pin S.	4G	Htr.	14 [12]	0.3	250	60	—	—	V
25A7G	Rectifier-Pentode [14]	8-pin O.	8F	Htr.	25	0.3	125	75	—	—	V
25X6GT	Voltage-Doubling Rectifier	7-pin O.	7Q	Htr.	25	0.15	125	60	—	—	V
25Y4GT	Half-Wave Rectifier	6-pin O.	5AA	Htr.	25	0.15	125	75	—	—	V
25Y5	Voltage-Doubling Rectifier	6-pin S.	6E	Htr.	25	0.3	250	85	—	—	V
25Z3	Half-Wave Rectifier	4-pin S.	4G	Htr.	25	0.3	250	50	—	—	V
25Z4	Half-Wave Rectifier	6-pin O.	5AA	Htr.	25	0.3	125	125	—	—	V
25Z5	Rectifier-Doubler	6-pin S.	6E	Htr.	25	0.3	125	100	—	500	V
25Z6	Rectifier-Doubler	7-pin O.	7Q	Htr.	25	0.3	125	100	—	500	V
32L7GT	Rectifier-Tetrode [14]	8-pin O.	8F	Htr.	32.5	0.3	125	60	—	—	V

TABLE XIII — RECTIFIERS — RECEIVING AND TRANSMITTING — *Continued*

See also Table XI — Control and Regulator Tubes

Type No.	Name	Base [2]	Socket Connections [1]	Cathode	Fil. or Heater		Max. A.C. Voltage Per Plate	Max. D.C. Output Current Ma.	Max. Inverse Peak Voltage	Max. Peak Plate Current Ma.	Type [7]
					Volts	Amps.					
35Y4	Half-Wave Rectifier	8-pin O.	5AL	Htr.	35 [8]	0.15	235	100	700	600	V
35Z3-LT	Half-Wave Rectifier	8-pin L.	4Z	Htr.	35	0.15	250 [13]	100	700	600	V
35Z4GT	Half-Wave Rectifier	6-pin O.	5AA	Htr.	35	0.15	250	100	—	—	V
35Z5G	Half-Wave Rectifier	6-pin O.	6AD	Htr.	35 [8]	0.15	125	100	—	—	V
35Z6G	Voltage Doubler	6-pin O.	6AD	Htr.	35	0.3	125	110	—	500	V
40Z5GT	Half-Wave Rectifier	6-pin O.	6AD	Htr.	40 [8]	0.15	125	100	—	—	V
45Z3	Half-Wave Rectifier	7-pin B.	5AM	Htr.	45	0.075	117	65	350	390	V
45Z5GT	Half-Wave Rectifier	6-pin O.	6AD	Htr.	45 [8]	0.15	125	100	—	—	V
50Y6GT	Full-Wave Rectifier	7-pin O.	7Q	Htr.	50	0.15	125	85	—	—	V
50Z6G	Voltage-Doubling Rectifier	7-pin O.	7Q	Htr.	50	0.3	125	150	—	—	V
50Z7G	Voltage-Doubling Rectifier	8-pin O.	8AN	Htr.	50	0.15	117	65	—	—	V
70A7GT	Rectifier-Tetrode [14]	8-pin O.	8AA	Htr.	70	0.15	125	60	—	—	V
70L7GT	Rectifier-Tetrode [14]	8-pin O.	8AA	Htr.	70	0.15	117	70	—	350	V
80	Full-Wave Rectifier	4-pin M.	4C	Fil.	5.0	2.0	350 400 550	125 110 135	—	—	V
81	Half-Wave Rectifier	4-pin M.	4B	Fil.	7.5	1.25	700	85	—	—	V
82	Full-Wave Rectifier	4-pin M.	4C	Fil.	2.5	3.0	500	125	1400	400	M
83	Full-Wave Rectifier	4-pin M.	4C	Fil.	5.0	3.0	500	250	1400	800	M
83-V	Full-Wave Rectifier	4-pin M.	4L	Htr.	5.0	2.0	400	200	1100	—	V
84/6Z4	Full-Wave Rectifier	5-pin S.	5D	Htr.	6.3	0.5	350	60	1000	—	V
117L7GT/ 117M7GT	Rectifier-Tetrode [14]	8-pin O.	8AO	Htr.	117	0.09	117	75	—	—	V
117N7GT	Rectifier-Tetrode [14]	8-pin O.	8AV	Htr.	117	0.09	117	75	350	450	V
117P7GT	Rectifier-Tetrode [14]	8-pin O.	8AV	Htr.	117	0.09	117	75	350	450	V
117Z6GT	Full-Wave Rectifier	7-pin O.	7Q	Htr.	117	0.075	235	60	700	360	V
217-A	Half-Wave Rectifier	4-pin J.	T-3A [4]	Fil.	10	3.25	—	—	3500	600	V
217-C	Half-Wave Rectifier	4-pin J.	T-3A [4]	Fil.	10	3.25	—	—	7500	600	V
HK253	Half-Wave Rectifier	4-pin J.	T-3A [4]	Fil.	5.0	10	—	350	10000	1500	V
816	Half-Wave Rectifier	4-pin S.	T-4AD [4]	Fil.	2.5	2.0	—	125	5000	500	M
836	Half-Wave Rectifier	4-pin M.	T-4AD [4]	Htr.	2.5	5.0	—	—	5000	1000	V
866A/866	Half-Wave Rectifier	4-pin M.	T-4AD [4]	Fil.	2.5	5.0	—	250 [10]	10000	1000	M
866B	Half-Wave Rectifier	4-pin M.	T-4AD [4]	Fil.	5.0	5.0	—	—	8500	1000	M
866Jr.	Half-Wave Rectifier	4-pin M.	4B	Fil.	2.5	2.5	1250	250 [9]			M
HY-866 Jr.	Half-Wave Rectifier	4-pin M.	T-4AD [4]	Htr.	2.5	3.0	1250	250 [9]	3500	—	M
RK-866	Half-Wave Rectifier	4-pin M.	T-4AD [4]	Fil.	2.5	5.0	—	250 [10]	10000	1000	M
871	Half-Wave Rectifier	4-pin M.	T-4AD [4]	Fil.	2.5	2.0	1750	250	5000	500	M
878 [11]	Half-Wave Rectifier	4-pin M.	T-4AD [4]	Fil.	2.5	5.0	7100	5	20000	—	V
879 [11]	Half-Wave Rectifier	4-pin S.	T-4AD [4]	Fil.	2.5	1.75	2650	7.5	7500	100	V
872	Half-Wave Rectifier	4-pin J.	T-3A [4]	Fil.	5.0	10.0	—	—	7500	5000	M
872-A	Half-Wave Rectifier	4-pin J.	T-3A [4]	Fil.	5.0	10.0	—	—	10000	5000	M
975A	Half-Wave Rectifier	4-pin J.	T-3A [4]	Fil.	5.0	10.0	—	1500	15000	6000	M
1616	Half-Wave Rectifier	4-pin M.	T-3A [4]	Fil.	2.5	5.0	—	130	5500	800	V
RK19	Full-Wave Rectifier	4-pin M.	T-3A [4]	Htr.	7.5	2.5	1250	200 [10]	3500	600	V
RK21	Half-Wave Rectifier	4-pin M.	T-4AD [4]	Htr.	2.5	4.0	1250	200 [10]	3500	600	V
RK22	Full-Wave Rectifier	4-pin M.	T-4AG [4]	Htr.	2.5	8.0	1250	200 [10]	3500	600	V
RK60	Full-Wave Rectifier	4-pin M.	T-4AG [4]	Fil.	5	3.0	750	250	2120	—	V

[1] Refer to Receiving Tube Diagrams.
[2] M.—medium; S.—small; O.—octal; L.—Loktal; J.—jumbo, B.—button.
[3] Metal tube series.
[4] Refer to Transmitting Tube Diagrams.
[5] Types 1 and 1-V interchangeable.
[6] With input choke of at least 20 henrys.
[7] M.—Mercury-vapor type; V.—high-vacuum type; G.—Gaseous Type.
[8] Tapped for pilot lamps.
[9] Per pair with choke input.
[10] Condenser input.
[11] For use with cathode-ray tubes.
[12] Maximum rating, corresponding to 130-volt line condition; normal rating is 12.6 v. for 117-v. line.
[13] With 100 ohms min. resistance in series with plate; without series resistor, maximum r.m.s. plate rating is 117 volts.
[14] For other data, see Table IX.

TABLE XIV — TRIODE TRANSMITTING TUBES

Type	Max. Plate Dissipation Watts	Cathode		Max. Plate Voltage	Max. Plate Current Ma.	Max. D.C. Grid Current Ma.	Amp. Factor	Interelectrode Capacitances ($\mu\mu$fd.)			Base [1]	Socket Connections [2]	Typical Operation	Plate Voltage	Grid Voltage	Plate Current Ma.	D.C. Grid Current Ma.	Approx. Grid Driving Power Watts [3]	Approx. Carrier Output Power Watts	Type
		Volts	Amps.					Grid to Fil.	Grid to Plate	Plate to Fil.										
RK24**	1.5	2.0	0.12	180	20	6.0	8.0	3.5	5.5	3.0	4-pin S.	T-4B	Class-C Amp.-Oscillator	180	— 45	16.5	6.0	0.5	2.0	RK24
HY24* [5]	2.0	2.0	0.13	180	20	4.5	9.3	2.7	5.4	2.3	4-pin S.	T-4B	Class-C Amp. (Telegraphy)	180	— 45	20	4.5	0.2	2.7	HY24
													Class-C Amp. (Telephony)	180	— 45	20	4.5	0.3	2.5	
RK33* [4 7]	2.5	2.0	0.12	250	20	6.0	10.5	3–2 [7]	3–2 [7]	2.5	7-pin S.	T-7DA	Class-C Amp.-Oscillator	250	— 60	20	6.0	0.54	3.5	RK33
HY114B [5]***	2.5	1.25	0.145	180	15	3.0	12	1.4	1.85	1.45	5-pin O.	T-8AC	Class-C Amp.-Oscillator	180	— 30	15	1.5	0.15	2.0 [11]	HY114B
													Class-C Amp.-Plate-Mod.	180	— 30	15	1.5	0.25	2.0 [11]	
HY615***	3.5	6.3	0.15	300	20	4.0	22	1.5	1.7	1.7	5-pin O.	T-8AG	Class-C Amp.-Oscillator	300	— 35	20	1.4	0.2	4.0 [11]	HY615
													Class-C Amp. Plate-Mod.	300	— 35	20	2.5	0.4	4.0 [11]	
HY6J5GTX*	3.5	6.3	0.3	250	20	4.0	20	3.8	2.7	3.0	6-pin O.	T-8AD	Class-C Amp. (Telegraphy)	250	— 30	20	2.0	0.2	3	HY6J5GTX
													Class-C Amp. (Telephony)	250	— 30	20	2.5	0.4	3	
1626	5.0	12.6	0.25	250	25	8.2	5.0	3.2	4.4	3.4	8-pin O.	T-8AD	Class-C Amp.-Oscillator	250	— 70	25	5.0	0.5	4.0	1626
RK34 *** [7]	10	6.3	0.8	300	80	20	13	4.2	2.7	0.8	7-pin M.	T-7DC	Class-C Amp.-Oscillator	300	— 36	80	20	1.8	16	RK34
205D	14	4.5	1.6	400	50	10	7.2	5.2	4.8	3.3	4-pin M.	T-4B	Class-C Amp.-Oscillator	400	—112	45	10	1.5	10	205D
													Class-C Amp. (Plate-Mod.)	350	—144	35	10	1.7	7.1	
843	15	2.5	2.5	450	40	7.5	7.7	4.0	4.5	4.0	5-pin M.	T-5B	Class-C Amp.-Oscillator	450	—140	30	5.0	1.0	7.5	843
													Class-C Amp. (Plate-Mod.)	350	—150	30	7.0	1.6	5.0	
RK59 [7]	15	6.3	1.0	500	90	25	25	5.0	9.0	1.0	4-pin M.	T-4D	Class-C Amp.-Oscillator	500	— 60	90	14	1.3	32	RK59
HY75 * [5]	15	6.3	2.5	450	100	20	10	1.8	——	0.95	5-pin O.	T-8AC	Class-C Amp.-Oscillator	450	— 60	100	15	1.5	21 [11]	HY75
													Class-C Amp. Plate-Mod.	450	— 60	80	20	2.5	16 [11]	
1602	15	7.5	1.25	450	60	15	8.0	4.0	7.0	3.0	4-pin M.	T-4B	Class-C Amp. (Telegraphy)	450	—115	55	15	3.3	13	1602
													Class-C Amp. (Telephony)	350	—135	45	15	3.5	8.0	
841	15	7.5	1.25	450	60	20	30	4.0	7.0	3.0	4-pin M.	T-4B	Class-C Amp. (Telegraphy)	450	— 34	50	15	1.8	15	841
													Class-C Amp. (Telephony)	350	— 47	50	15	2.0	11	
10 RK10 * [4]	15	7.5	1.25	450	65	15	8.0	3.0	8.0	4.0	4-pin M.	T-4B	Class-C Amp. (Telegraphy)	450	—100	65	15	3.2	19	10 RK10
													Class-C Amp. (Telephony)	350	—100	50	12	2.2	12	
													Grid-Modulated Amp.	450	—170	40	1.0	2.4	6.0	
RK100 [4]	15	6.3	0.9	150	250	100	40	23	19	3.0	6-pin M.	T-6B	Class-C Oscillator [10]	110	——	80	8.0	——	3.5	RK100
													Class-C Amplifier [10]	110	——	185	40	2.1	12	
1608	20	2.5	2.5	425	95	25	20	8.5	9.0	3.0	4-pin M.	T-4B	Class-C Amp. (Telegraphy)	425	— 90	95	20	3.0	27	1608
													Class-C Amp. (Telephony)	350	— 80	85	20	3.0	18	
310	20	7.5	1.25	600	70	15	8.0	4.0	7.0	2.2	4-pin M.	T-4B	Class-C Amp. (Telegraphy)	600	—150	65	15	4.0	25	310
													Class-C Amp. (Telephony)	500	—190	55	15	4.5	18	
801-A/801 *	20	7.5	1.25	600	70	15	8.0	4.5	6.0	1.5	4-pin M.	T-4B	Class-C Amp. (Telegraphy)	600	—150	65	15	4.0	25	801-A/801
													Class-C Amp. (Telephony)	500	—190	55	15	4.5	18	
HY801-A /801*	20	7.5	1.25	600	70	15	8.0	4.5	6.0	1.5	4-pin M.	T-4B	Class-C Amp. (Telegraphy)	600	—200	70	15	4.0	30	HY801A /801
													Class-C Amp. (Telephony)	500	—200	60	15	4.5	22	
T20 * [6]	20	7.5	1.75	750	85	25	20	4.9	5.1	0.7	4-pin M.	T-4BB	Class-C Amp. (Telegraphy)	750	— 85	85	18	3.6	44	T20
													Class-C Amp. Plate-Mod.	750	—140	70	15	3.6	38	

TABLE XIV — TRIODE TRANSMITTING TUBES — *Continued*

Type	Max. Plate Dissipation Watts	Cathode		Max. Plate Voltage	Max. Plate Current Ma.	Max. D.C. Grid Current Ma.	Amp. Factor	Interelectrode Capacitances ($\mu\mu$fd.)			Base [2]	Socket Connections [1]	Typical Operation	Plate Voltage	Grid Voltage	Plate Current Ma.	D.C. Grid Current Ma.	Approx. Grid Driving Power Watts [5]	Approx. Carrier Output Power Watts	Type
		Volts	Amps.					Grid to Fil.	Grid to Plate	Plate to Fil.										
TZ20* [6]	20	7.5	1.75	750	85	30	62	5.3	5.0	0.6	4-pin M.	T-4BB	Class-C Amp. (Telegraphy)	750	− 40	85	28	3.75	44	TZ20
													Class-C Amp. Plate-Mod.	750	−100	70	23	4.8	38	
RK11 * [4]	25	6.3	3.0	750	105	35	20	7.0	7.0	0.9	4-pin M.	T-4BB	Class-C Amp. (Telegraphy)	750	−120	105	21	3.2	55	RK11
													Class-C Amp. Plate-Mod.	600	−120	85	24	3.7	38	
RK12 *	25	6.3	3.0	750	105	40	100	7.0	7.0	0.9	4-pin M.	T-4BB	Class-C Amp. (Telegraphy)	750	−100	105	35	5.2	55	RK12
													Class-C Amp. Plate-Mod.	600	−100	85	27	3.8	38	
HK24 *	25	6.3	3.0	2000	75	30	25	2.5	1.7	0.4	4-pin S.	T-4BB	Class-C Amp. (Telegraphy)	2000	−140	56	18	4.0	90	HK24
													Class-C Amp. Plate-Mod.	1500	−145	50	25	5.5	60	
HY25 *	25	7.5	2.25	800	75	25	55	4.2	4.6	1.0	4-pin M.	T-4BB	Class-C Amp. (Telegraphy)	750	− 45	75	15	2.0	42	HY25
													Class-C Amp. Plate-Mod.	700	− 45	75	17	5.0	39	
Twin 30* [5 7]	30	6.0	4.0	1500	85	25	32	1.9	2.0	0.3	4-pin M.	T-4DB	Class-C Amp. (Telegraphy)	1500	−100	150 [8]	40 [8]	15	225	Twin 30
													Class-C Amp. Plate-Mod.	1250	−100	135 [8]	40 [8]	15	125	
HY30Z *	30	6.3	2.25	850	150	25	87	6.0	4.85	1.0	4-pin M.	T-4BE	Class-C Amp.-Oscillator	850	− 75	90	25	2.5	58	HY30Z
													Class-C Amp. Plate-Mod.	700	− 75	90	25	3.5	47	
HY31Z* [8]	30	6.3	2.5	500	150	30	45	5.0	5.5	1.9	5-pin M.	T-4D	Class-C Amp. (Telegraphy)	500	−150	150	30	2.5	56	HY31Z
HY1231Z* [5 8]		12.6	1.5										Class-C Amp. (Telephony)	400	−100	150	30	3.5	45	HY1231Z
316A ****	30	2.0	3.65	450	80	12	6.5	1.2	1.6	0.8	None [9]	——	Class-C Amp. (Telegraphy)	450	——	80	12	——	7.5	316A
													Class-C Amp. Plate-Mod.	400	——	80	12	——	6.5	
809 * [6]	30	6.3	2.5	1000	125	——	50	5.7	6.7	0.9	4-pin M.	T-4BB	Class-C Amp. (Telegraphy)	1000	− 75	100	25	3.8	75	809
													Class-C Amp. Plate-Mod.	750	− 60	100	32	4.3	55	
1623 * [6]	30	6.3	2.5	1000	100	25	20	5.7	6.7	0.9	4-pin M.	T-4BB	Class-C Amp.-Oscillator	1000	− 90	100	20	3.1	75	1623
													Class-C Amp. Plate-Mod.	750	−125	100	20	4.0	55	
RK30 * [4]	35	7.5	3.25	1250	80	25	15	2.75	2.5	2.75	4-pin M.	T-4BC	Class-C Amp. (Telegraphy)	1250	−180	90	18	5.2	85	RK30
													Class-C Amp. Plate-Mod.	1000	−200	80	15	4.5	60	
800 *	35	7.5	3.25	1250	80	25	15	2.75	2.5	2.75	4-pin M.	T-4BC	Class-C Amp. (Telegraphy)	1250	−175	70	15	4.0	65	800
													Class-C Amp. Plate-Mod.	1000	−200	70	15	4.0	50	
1628****	40	3.5	3.25	1000	60	15	23	2.0	2.0	0.4	None [9]	——	Class-C Amp.-Oscillator	1000	− 65	50	15	1.7	35	1628
													Class-C Amp. Plate-Mod.	800	−100	40	11	1.6	22	
													Grid-Modulated Amp.	1000	−120	50	3.5	5.0	20	
RK18 * [4]	40	7.5	3.0	1250	100	40	18	6.0	4.8	1.8	4-pin M.	T-4BB	Class-C Amp. (Telegraphy)	1250	−160	100	12	2.8	95	RK18
													Class-C Amp. Plate-Mod.	1000	−160	80	13	3.1	64	
RK31	40	7.5	3.0	1250	100	35	170	7.0	1.0	2.0	4-pin M.	T-4BB	Class-C Amp. (Telegraphy)	1250	− 80	100	30	3.0	90	RK31
													Class-C Amp. Plate-Mod.	1000	− 80	100	28	3.5	70	
HY40 *	40	7.5	2.25	1000	125	25	25	6.2	6.3	1.1	4-pin M.	T-4BB	Class-C Amp. (Telegraphy)	1000	− 90	125	20	5.0	94	HY40
													Class-C Amp. Plate-Mod.	850	− 90	125	15	3.5	82	
													Grid-Modulated Amp.	1000	——	125	——	——	20 [12]	
HY40Z *	40	7.5	2.5	1000	125	30	80	6.2	6.3	1.1	4-pin M.	T-4BB	Class-C Amp. (Telegraphy)	1000	−27.5	125	25	5.0	94	HY40Z
													Class-C Amp. Plate-Mod.	850	− 30	90	30	7.0	82	
													Grid-Modulated Amp.	1000	——	60	——	——	20 [12]	
T40* [6]	40	7.5	2.5	1500	150	40	25	4.5	4.8	0.8	4-pin M.	T-4BB	Class-C Amp.-Oscillator	1500	−140	150	28	9.0	158	T40
													Class-C Amp. Plate-Mod.	1250	−115	115	20	5.25	104	

TABLE XIV — TRIODE TRANSMITTING TUBES — *Continued*

Type	Max. Plate Dissipation Watts	Cathode		Max. Plate Voltage	Max. Plate Current Ma.	Max. D.C. Grid Current Ma.	Amp. Factor	Interelectrode Capacitances ($\mu\mu$fd.)			Base [2]	Socket Connections [1]	Typical Operation	Plate Voltage	Grid Voltage	Plate Current Ma.	D.C. Grid Current Ma.	Approx. Grid Driving Power Watts [5]	Approx. Carrier Output Power Watts	Type
		Volts	Amps.					Grid to Fil.	Grid to Plate	Plate to Fil.										
TZ40 * [6]	40	7.5	2.5	1500	150	45	62	4.8	5.0	0.8	4-pin M.	T-4BB	Class-C Amp.-Oscillator	1500	— 90	150	38	10	165	TZ40
													Class-C Amp. Plate-Mod.	1250	—100	125	30	7.5	116	
HY57 *	40	6.3	2.25	850	110	25	50	4.9	5.1	1.7	4-pin M.	T-4BB	Class-C Amp. (Telegraphy)	850	— 48	110	15	2.5	70	HY57
													Class-C Amp. Plate-Mod.	700	— 45	90	17	5.0	47	
													Grid-Modulated Amp.	850	——	70	——	——	20 [12]	
756 [4]	40	7.5	2.0	850	110	25	8.0	3.0	7.0	2.7	4-pin M.	T-4B	Class-C Amplifier	850	——	110	25	——	——	756
825 [4]	40	7.5	2.0	850	110	20	20	3.5	8.0	2.7	4-pin M.	T-4B	Class-C Amplifier	850	——	110	20	——	——	825
830 [4]	40	10	2.15	750	110	18	8.0	4.9	9.9	2.2	4-pin M.	T-4B	Class-C Amplifier	750	—180	110	18	7.0	55	830
													Grid-Modulated Amp.	1000	—200	50	2.0	3.0	15	
RK32 ** [4]	50	7.5	3.25	1250	100	25	11	2.5	3.4	0.7	4-pin M.	T-4BC	Class-C Amp. (Telegraphy)	1250	—225	100	14	4.8	90	RK32
													Class-C Amp. Plate-Mod.	1000	—310	100	21	8.7	70	
RK35 * [4]	50	7.5	4.0	1500	125	20	9.0	3.5	2.7	0.4	4-pin M.	T-4BC	Class-C Amp. (Telegraphy)	1500	—250	115	15	5.0	120	RK35
													Class-C Amp. Plate-Mod.	1250	—250	100	14	4.6	93	
													Grid-Modulated Amp.	1500	—180	37	——	2.0	25	
RK37 *	50	7.5	4.0	1500	125	35	28	3.5	3.2	0.2	4-pin M.	T-4BC	Class-C Amp. (Telegraphy)	1500	—130	115	30	7.0	122	RK37
													Class-C Amp. Plate-Mod.	1250	—150	100	23	5.6	90	
													Grid-Modulated Amp.	1500	— 50	50	——	2.4	26	
UH50 *	50	7.5	3.25	1250	125	25	10.6	2.2	2.6	0.3	4-pin M.	T-4BC	Class-C Amp. (Telegraphy)	1250	—225	125	20	7.5	115	UH50
													Class-C Amp. Plate-Mod.	1250	—325	125	20	10	115	
													Grid-Modulated Amp.	1250	—200	60	2.0	3.0	25	
UH51 *	50	5.0	6.5	2000	175	25	10.6	2.2	2.3	0.3	4-pin M.	T-4BC	Class-C Amp. (Telegraphy)	2000	—500	150	20	15	225	UH51
													Class-C Amp. Plate-Mod.	1500	—400	165	20	15	200	
													Grid-Modulated Amp.	1500	—400	85	2.0	8.0	65	
HK54 *	50	5.0	5.0	3000	150	30	27	1.9	1.9	0.2	4-pin M.	T-4BC	Class-C Amp. (Telegraphy)	3000	—290	100	25	10	250	HK54
													Class-C Amp. Plate-Mod.	2500	—250	100	20	8.0	210	
													Grid-Modulated Amp.	2000	—150	39	1.5	3.0	28	
HK154 [4]	50	5.0	6.5	1500	175	30	6.7	4.3	5.9	1.1	4-pin M.	T-4BC	Class-C Amp. (Telegraphy)	1500	—590	167	20	15	200	HK154
													Class-C Amp. Plate-Mod.	1250	—460	170	20	12	162	
													Grid-Modulated Amp.	1500	—450	52	——	5.0	28	
HK158 *	50	12.6	2.5	2000	200	40	25	4.7	4.6	1.0	4-pin M.	T-4BC	Class-C Amp.-Oscillator	2000	—150	125	25	6.0	200	HK158
													Class-C Amp. Plate-Mod.	2000	—140	105	25	5.0	170	
304A * [4]	50	7.5	3.25	1250	100	25	11	2.0	2.5	0.7	4-pin M.	T-4BC	Class-C Amp. (Telegraphy)	1250	—200	100	——	——	85	304A
304B *													Class-C Amp. Plate-Mod.	1000	—180	100	——	——	65	304B
356A *	50	5.0	5.0	1500	120	35	50	2.25	2.75	1.0	Special	T-4BD	Class-C Amp. (Telegraphy)	1500	— 60	100	——	——	100	356A
													Class-C Amp. Plate-Mod.	1250	—100	100	35	——	85	
808	50	7.5	4.0	1500	150	35	47	5.3	2.8	0.15	4-pin M.	T-4BC	Class-C Amp. (Telegraphy)	1500	—200	125	30	9.5	140	808
													Class-C Amp. Plate-Mod.	1250	—225	100	32	10.5	105	
834 *	50	7.5	3.25	1250	100	20	10.5	2.2	2.6	0.6	4-pin M.	T-4BC	Class-C Amp. (Telegraphy)	1250	—225	90	15	4.5	75	834
													Class-C Amp. Plate-Mod.	1000	—310	90	17.5	6.5	58	
841A [4]	50	10	2.0	1250	150	30	14.6	3.5	9.0	2.5	4-pin M.	T-4BB	Class-C Amplifier	——	——	——	——	——	85	841A
841SW	50	10	2.0	1000	150	30	14.6	——	9.0	——	4-pin M.	T-4BB	Class-C Amplifier	——	——	——	——	——	——	841SW

TABLE XIV — TRIODE TRANSMITTING TUBES — *Continued*

Type	Max. Plate Dissipation Watts	Cathode		Max. Plate Voltage	Max. Plate Current Ma.	Max. D.C. Grid Current Ma.	Amp. Factor	Interelectrode Capacitances ($\mu\mu$fd.)			Base [2]	Socket Connections [1]	Typical Operation	Plate Voltage	Grid Voltage	Plate Current Ma.	D.C. Grid Current Ma.	Approx. Grid Driving Power Watts [5]	Approx. Carrier Output Power Watts	Type
		Volts	Amps.					Grid to Fil.	Grid to Plate	Plate to Fil.										
T55 **	55	7.5	3.0	1500	150	40	20	5.0	3.9	1.2	4-pin M.	T-4BB	Class-C Amp. (Telegraphy)	1500	−170	150	18	6.0	170	T55
													Class-C Amp. Plate-Mod.	1500	−195	125	15	5.0	145	
811 * [6]	55	6.3	4.0	1500	150	50	160	5.5	5.5	0.6	4-pin M.	T-4BB	Class-C Amp. (Telegraphy)	1500	−113	150	35	8.0	170	811
													Class-C Amp. Plate-Mod.	1250	−125	125	50	11	120	
812 * [6]	55	6.3	4.5	1500	150	35	29	5.3	5.3	0.8	4-pin M.	T-4BB	Class-C Amp. (Telegraphy)	1500	−175	150	25	6.5	170	812
													Class-C Amp. Plate-Mod.	1250	−125	125	25	6.0	120	
RK51 *	60	7.5	3.75	1500	150	40	20	6.0	6.0	2.5	4-pin M.	T-4BB	Class-C Amp. (Telegraphy)	1500	−250	150	31	10	170	RK51
													Class-C Amp. Plate-Mod.	1250	−200	105	17	4.5	96	
													Grid-Modulated Amp.	1500	−130	60	0.4	2.3	128	
RK52 *	60	7.5	3.75	1500	130	50	170	6.6	12	2.2	4-pin M.	T-4BB	Class-C Amp. (Telegraphy)	1500	−120	130	40	7.0	135	RK52
													Class-C Amp. Plate-Mod.	1250	−120	115	47	8.5	102	
HF60	60	10	2.5	1600	150	——	20	——	5.2	——	4-pin M.	T-4BC	Class-C Amp.-Oscillator	1600	−150	——	——	——	100	HF60
826***	60	7.5	4.0	1000	125	40	31	3.7	2.9	1.4	Special	T-9A	Class-C Amp.-Oscillator	1000	− 70	125	35	5.8	86	826
													Class-C Amp. Plate-Mod.	800	− 98	94	35	6.2	53	
													Class-B Amp. (Telephony)	1000	− 50	65	8.5	3.7	22	
													Grid-Modulated Amp.	1000	−125	65	9.5	8.2	25	
830B 930B	60	10	2.0	1000	150	30	25	5.0	11	1.8	4-pin M.	T-4BB	Class-C Amp.-Oscillator	1000	−110	140	30	7.0	90	830B 930B
													Class-C Amp. Plate-Mod.	800	−150	95	20	5.0	50	
													Class-B Amp. (Telephony)	1000	− 35	85	6.0	6.0	26	
HY51A * HY51B *	65	7.5 10	3.5 2.25	1000	175	25	25	7.1	7.0	1.1	4-pin M.	T-4BB	Class-C Amp. (Telegraphy)	1000	− 75	175	20	7.5	131	HY51A HY51B
													Class-C Amp. Plate-Mod.	1000	−67.5	150	15	7.5	104	
													Grid-Modulated Amp.	1000	——	100	——	——	33 [12]	
HY51Z *	65	7.5	3.5	1000	175	35	85	7.1	7.0	1.1	4-pin M.	T-4BE	Class-C Amp. (Telegraphy)	1000	−22.5	175	35	10	131	HY51Z
													Class-C Amp. Plate-Mod.	1000	− 30	150	35	10	104	
													Grid-Modulated Amp.	1000	——	100	——	——	33 [12]	
UH35 * [6]	70	5.0	4.0	1500	150	35	30	1.4	1.6	0.2	4-pin M.	T-4BB	Class-C Amp. (Telegraphy)	1500	−170	150	30	7.0	170	UH35
													Class-C Amp. Plate-Mod.	1500	−120	100	30	5.0	120	
35T * 35TG	70	5.0	4.0	2000	150	35	30	3.8 1.9	1.9	0.2	4-pin M.	T-4BB T-4BC	Class-C Amp. (Telegraphy)	1500	−120	150	30	7.0	170	35T 35TG
													Class-C Amp. Plate-Mod.	1500	−120	100	30	5.0	120	
													Grid-Modulated Amp.	2000	−400	60	3.0	3.0	50	
V70 V70B	70	10	2.5	1500	140	25	14	5.0	9.0	2.3	4-pin J. 4-pin M.	T-3AB T-4BB	Class-C Amp. (Telegraphy)	1500	−215	130	6.0	3.0	140	V70 V70B
													Class-C Amp. Plate-Mod.	1250	−250	130	6.0	3.0	120	
V70A V70C	70	10	2.5	1500	140	20	25	5.0	9.5	2.0	4-pin J. 4-pin M.	T-3AB T-4BB	Class-C Amp. (Telegraphy)	1000	−110	140	30	7.0	90	V70A V70C
													Class-C Amp. Plate-Mod.	800	−150	95	20	5.0	50	
V70D	70	10	3.0	1500	165	40	20	4.5	4.5	1.75	4-pin M.	T-4BB	Class-C Amp. (Telegraphy)	1500	−200	130	20	6.0	140	V70D
													Class-C Amp. Plate-Mod.	1000	−140	165	30	7.0	120	
50T [4]	75	5.0	6.0	3000	100	30	12	2.0	2.0	0.4	4-pin M.	T-4BC	Class-C Amplifier	3000	−600	100	25	——	250	50T
75T *	75	5.0	6.5	3000	175	30	10.6	2.2	2.3	0.3	4-pin M.	T-4BC	Class-C Amp. (Telegraphy)	1500	−300	175	30	10	200	75T
													Class-C Amp. Plate-Mod.	1500	−300	175	30	10	200	
													Grid-Modulated Amp.	1500	−400	85	2.0	8.0	65	

TABLE XIV — TRIODE TRANSMITTING TUBES — *Continued*

Type	Max. Plate Dissipation Watts	Cathode		Max. Plate Voltage	Max. Plate Current Ma.	Max. D.C. Grid Current Ma.	Amp. Factor	Interelectrode Capacitances ($\mu\mu$fd.)			Base [2]	Socket Connections [1]	Typical Operation	Plate Voltage	Grid Voltage	Plate Current Ma.	D.C. Grid Current Ma.	Approx. Grid Driving Power Watts [5]	Approx. Carrier Output Power Watts	Type
		Volts	Amps.					Grid to Fil.	Grid to Plate	Plate to Fil.										
HF75*	75	10	3.25	2000	120	——	12.5	——	2.0	——	4-pin M.	T-4BC	Class-C Osc.-Amp.	2000	——	120	——	——	150	HF75
TW75 *	75	7.5	4.15	2000	175	60	20	3.35	1.5	0.7	4-pin M.	T-4BC	Class-C Amp.-Oscillator	2000	−175	150	37	12.7	225	TW75
													Class-C Amp. Plate-Mod.	2000	−260	125	32	13.2	198	
HF100	75	10	2.0	1500	150	30	23	3.5	4.5	1.4	4-pin M.	T-4BC	Class-C Amp. (Telegraphy)	1500	−200	150	18	6.0	170	HF100
													Class-C Amp. Plate-Mod.	1250	−250	110	21	8.0	105	
													Grid-Modulated Amp.	1500	−280	72	1.5	6.0	42	
111H	75	10	2.25	1500	160	——	23	——	4.6	——	4-pin M.	T-4BC	Class-C Osc.-Amp.	1500	——	160	——	——	175	111H
ZB120	75	10	2.0	1250	160	40	90	5.3	5.2	3.2	4-pin J.	T-3AA	Class-C Amp. (Telegraphy)	1250	−135	160	23	5.5	145	ZB120
													Class-C Amp. Plate-Mod.	1000	−150	120	21	5.0	95	
													Grid-Modulated Amp.	1250	——	95	8.0	1.5	45	
242A	85	10	3.25	1250	150	50	12.5	6.5	13	4.0	4-pin J.	T-3AA	Class-C Amp. (Telegraphy)	1250	−175	150	——	——	130	242A
													Class-C Amp. Plate-Mod.	1000	−160	150	50	——	100	
284D	85	10	3.25	1250	150	100	4.8	6.0	8.3	5.6	4-pin J.	T-3AA	Class-C Amp. (Telegraphy)	1250	−500	150	——	——	125	284D
													Class-C Amp. Plate-Mod.	1000	−450	150	50	——	100	
8005* [6]	85	10	3.25	1500	200	45	20	6.4	5.0	1.0	4-pin M.	T-4BB	Class-C Amp.-Oscillator	1500	−130	200	32	7.5	220	8005
													Class-C Amp. Plate-Mod.	1250	−195	190	28	9.0	170	
													Class-B Amp. (Telephony)	1500	− 80	83	1.0	5.0	45	
RK36* [4]	100	5.0	8.0	3000	165	35	14	4.5	5.0	1.0	4-pin M.	T-4BC	Class-C Amp. (Telegraphy)	2000	−360	150	30	15	200	RK36
													Class-C Amp. (Telephony)	2000	−360	150	30	15	200	
													Grid-Modulated Amp.	2000	−270	72	1.0	3.5	42	
													Class-B Amp. (Telephony)	2000	−180	75	3.0	10	50	
RK38* [4]	100	5.0	8.0	3000	165	40	——	4.6	4.3	0.9	4-pin M.	T-4BC	Class-C Amp. (Telegraphy)	2000	−200	160	30	10	225	RK38
													Class-C Amp. (Telephony)	2000	−200	160	30	10	225	
													Grid-Modulated Amp.	2000	−150	80	2.0	5.5	60	
													Class-B Amp. (Telephony)	2000	−100	75	2.0	7.0	55	
100TH	100	5.0	6.5	3000	225	50	30	2.2	2.0	0.3	4-pin M.	T-4BC	Class-C Amp. (Telegraphy)	3000	−210	167	40	18	400	100TH
													Class-C Amp. Plate-Mod.	3000	−210	167	45	18	400	
													Class-B Amp. (Telephony)	3000	− 70	50	2.0	5.0	50	
													Grid-Modulated Amp.	3000	−400	70	3.0	7.0	100	
100TL	100	5.0	6.5	3000	225	35	12	2.0	2.3	0.4	4-pin M.	T-4BC	Class-C Amp. (Telegraphy)	3000	−600	167	30	18	400	100TL
													Class-C Amp. Plate-Mod.	3000	−600	167	35	18	400	
													Class-B Amp. (Telephony)	3000	−280	50	1.0	5.0	50	
													Grid-Modulated Amp.	3000	−560	60	2.0	7.0	90	
HK254	100	5.0	7.5	4000	200	40	25	3.3	3.4	1.1	4-pin J.	T-3AC	Class-C Amp. (Telegraphy)	4000	−380	120	35	20	475	HK254
													Class-C Amp. Plate-Mod.	3000	−290	135	40	23	320	
													Class-B Amp. (Telephony)	3000	−125	51	2.0	3.0	54	
													Grid-Modulated Amp.	3000	——	51	3.0	4.0	58	
RK58 [6]	100	10	3.25	1250	175	70	——	8.5	6.5	10.5	4-pin J.	T-3AB	Class-C Amp. (Telegraphy)	1250	− 90	150	30	6.0	130	RK58
													Class-C Amp. Plate-Mod.	1000	−135	150	50	16	100	
													Class-B Amp. (Telephony)	1250	——	106	15	6.0	42.5	

TABLE XIV — TRIODE TRANSMITTING TUBES — *Continued*

Type	Max. Plate Dissipation Watts	Cathode		Max. Plate Voltage	Max. Plate Current Ma.	Max. D.C. Grid Current Ma.	Amp. Factor	Interelectrode Capacitances ($\mu\mu$fd.)			Base [2]	Socket Connections [1]	Typical Operation	Plate Voltage	Grid Voltage	Plate Current Ma.	D.C. Grid Current Ma.	Approx. Grid Driving Power Watts [5]	Approx. Carrier Output Power Watts	Type
		Volts	Amps.					Grid to Fil.	Grid to Plate	Plate to Fil.										
HF120	100	10	3.25	1250	175	—	12	—	10.5	—	4-pin J.	—	Class-C Amp.-Oscillator	1250	—	175	—	—	150	HF120
HF125	100	10	3.25	1500	175	—	25	—	11.5	—	4-pin J.	—	Class-C Amp.-Oscillator	1500	—	175	—	—	200	HF125
HF140	100	10	3.25	1250	175	—	12	—	12.5	—	4-pin J.	—	Class-C Amp.-Oscillator	1250	—	175	—	—	150	HF140
203A 303A	100	10	3.25	1250	175	60	25	6.5	14.5	5.5	4-pin J.	T-3AA	Class-C Amp. (Telegraphy)	1250	−125	150	25	7.0	130	203A 303A
													Class-C Amp. (Telephony)	1000	−135	150	50	14	100	
													Class-B Amp. (Telephony)	1250	− 45	105	3.0	3.0	42.5	
203H	100	10	3.25	1500	175	60	25	6.5	11.5	1.5	4-pin J.	T-3AB	Class-C Amp. (Telegraphy)	1500	−200	170	12	3.8	200	203H
													Class-C Amp. (Telephony)	1250	−160	167	19	5.0	160	
													Class-B Amp. (Telephony)	1500	− 48	100	3.0	2.0	52	
211 311 835 [4]	100	10	3.25	1250	175	50	12	6.0 6.0	14.5 9.25	5.5 5.0	4-pin J.	T-3AA	Class-C Amp. (Telegraphy)	1250	−225	150	18	7.0	130	211 311 835
													Class-C Amp. (Telegraphy)	1000	−260	150	35	14	100	
													Class-B Amp. (Telephony)	1250	−100	106	1.0	7.5	42.5	
242B 342B	100	10	3.25	1250	150	50	12.5	7.0	13.6	6.0	4-pin J.	T-3AA	Class-C Amp. (Telegraphy)	1250	−175	150	—	—	130	242B 342B
													Class-C Amp. Plate-Mod.	1000	−160	150	50	—	100	
													Class-B Amp. (Telephony)	1250	− 80	120	—	—	50	
242C	100	10	3.25	1250	150	50	12.5	6.1	13.0	4.7	4-pin J.	T-3AA	Class-C Amp. (Telegraphy)	1250	−175	150	—	—	130	242C
													Class-C Amp. Plate-Mod.	1000	−160	150	50	—	100	
													Class-B Amp. (Telephony)	1250	− 90	120	—	—	50	
261A 361A	100	10	3.25	1250	150	50	12	6.5	9.0	4.0	4-pin J.	T-3AA	Class-C Amp. (Telegraphy)	1250	−175	125	—	—	100	261A 361A
													Class-C Amp. Plate-Mod.	1000	−160	150	50	—	100	
													Class-B Amp. (Telephony)	1250	−100	125	—	—	50	
276A 376A	100	10	3.0	1250	125	50	12	6.0	9.0	4.0	4-pin J.	T-3AA	Class-C Amp. (Telegraphy)	1250	−175	125	—	—	100	276A 376A
													Class-C Amp. Plate-Mod.	1000	−160	125	50	—	85	
													Class-B Amp. (Telephony)	1250	−100	125	—	—	50	
284B	100	10	3.25	1250	150	100	5.0	4.2	7.4	5.3	4-pin J.	T-3AB	Class-C Amp. (Telegraphy)	1250	−500	150	—	—	125	284B
													Class-C Amp. Plate-Mod.	1000	−430	150	50	—	100	
													Class-B Amp. (Telephony)	1250	−270	120	—	—	50	
295A	100	10	3.25	1250	175	50	25	6.5	14.5	5.5	4-pin J.	T-3AA	Class-C Amp. (Telegraphy)	1250	−125	150	—	—	125	295A
													Class-C Amp. Plate-Mod.	1000	−125	150	50	—	100	
													Class-B Amp. (Telephony)	1250	− 75	105	—	—	42.5	
838 938	100	10	3.25	1250	175	70	—	6.5	8.0	5.0	4-pin J.	T-3AA	Class-C Amp. (Telegraphy)	1250	− 90	150	30	6.0	130	838 938
													Class-C Amp. (Telephony)	1000	−135	150	60	16	100	
													Class-B Amp. (Telephony)	1250	0	106	15	6.0	42.5	
852	100	10	3.25	3000	150	40	12	1.9	2.6	1.0	4-pin M.	T-4BC	Class-C Amp. (Telegraphy)	3000	−600	85	15	12	165	852
													Class-C Amp. (Telephony)	2000	−500	67	30	23	75	
													Class-B Amp. (Telephony)	3000	−250	43	0	7.0	40	
8003	100	10	3.25	1500	250	50	12	5.8	11.7	3.4	4-pin J.	T-3AB	Class-C Amp.-Oscillator	1350	−180	245	35	11	250	8003
													Class-C Amp. Plate-Mod.	1100	−260	200	40	15	167	
													Class-B Amp. (Telephony)	1350	−110	110	1.5	8	50	

TABLE XIV — TRIODE TRANSMITTING TUBES — *Continued*

Type	Max. Plate Dissipation Watts	Cathode		Max. Plate Voltage	Max. Plate Current Ma.	Max. D.C. Grid Current Ma.	Amp. Factor	Interelectrode Capacitances ($\mu\mu$fd.)			Base [2]	Socket Connections [1]	Typical Operation	Plate Voltage	Grid Voltage	Plate Current Ma.	D.C. Grid Current Ma.	Approx. Grid Driving Power Watts [5]	Approx. Carrier Output Power Watts	Type
		Volts	Amps.					Grid to Fil.	Grid to Plate	Plate to Fil.										
RK57/ /805	125	10	3.25	1500	210	70	——	6.5	8.0	5.0	4-pin J.	T-3AB	Class-C Amp. (Telegraphy)	1500	−105	200	40	8.5	215	RK57/ /805
													Class-C Amp. (Telephony)	1250	−160	160	60	16	140	
													Class-B Amp. (Telephony)	1500	− 10	115	15	7.5	57.5	
T125 *	125	10	4.5	2500	250	60	25	6.3	6.0	1.3	4-pin J.	T-3AC	Class-C Amp. (Telegraphy)	2500	−200	240	31	11	475	T125
													Class-C Amp. Plate-Mod.	2000	−215	200	28	10	320	
HF130	125	10	3.25	1250	210	——	12.5	——	9.0	——	4-pin J.	——	Class-C Amp.-Oscillator	1250	−210	——	——	——	170	HF130
HF150	125	10	3.25	1500	210	——	12.5	——	7.2	——	4-pin J.	——	Class-C Amp.-Oscillator	1500	——	210	——	——	200	HF150
HF175	125	10	4.0	2000	250	——	18	——	6.3	——	4-pin J.	——	Class-C Amp.-Oscillator	2000	——	250	——	——	300	HF175
GL146	125	10	3.25	1500	200	60	78	7.2	9.2	3.9	4-pin GL	T-4BG	Class-C Amp.-Oscillator	1250	−150	180	30	——	150	GL146
													Class-C Amp. Plate-Mod.	1000	−200	160	40	——	100	
													Class-B Amp. (Telephony)	1250	0	132	——	——	55	
GL152	125	10	3.25	1500	200	60	25	7.0	8.8	4.0	4-pin GL	T-4BG	Class-C Amp.-Oscillator	1250	−150	180	30	——	150	GL152
													Class-C Amp. Plate-Mod.	1000	−200	160	30	——	100	
													Class-B Amp. (Telephony)	1250	− 40	132	——	——	55	
805 905	125	10	3.25	1500	210	70	40/60	8.5	6.5	10.5	4-pin J.	T-3AB	Class-C Amp. (Telegraphy)	1500	−105	200	40	8.5	215	805 905
													Class-C Amp. Plate-Mod.	1250	−160	160	60	16	140	
													Class-B Amp. (Telephony)	1500	− 10	115	15	7.5	57.5	
150T	150	5.0	10	3000	200	50	13	3.0	3.5	0.5	4-pin J.	T-3AC	Class-C Amp. (Telegraphy)	3000	−600	200	35	——	450	150T
TW150	150	10	4.1	3000	200	60	35	3.9	2.0	0.8	4-pin J.	T-3AC	Class-C Amp.-Oscillator	3000	−170	200	45	17	470	TW150
													Class-C Amp. Plate-Mod.	3000	−260	165	40	17	400	
152TL ** [6] HK252-L** [6]	150	5/10 [13]	13/6.5	3000	500	75	10	7.0	5.0	0.4	Special	T-4BF	Class-C Amp.-Oscillator	3000	−400	250	30	15	610	152TL HK252-L
													Class-C Amp. Plate-Mod.	2500	−350	250	35	16	500	
HF200 HV18	150	10–11	3.4	2500	200	50	18	5.2	5.8	1.2	4-pin J.	T-3AC	Class-C Amp. (Telegraphy)	2500	−300	200	18	8.0	380	HF200 HV18
													Class-C Amp. Plate-Mod.	2000	−350	160	20	9.0	250	
													Class-B Amp. (Telephony)	2500	−140	90	——	4.0	80	
HD203A	150	10	4.0	2000	250	60	25	——	12	——	4-pin J.	T-3AB	Class-C Amplifier	——	——	——	——	——	375	HD203A
HF-250	150	10.5	4.0	2500	200	——	18	——	5.8	——	4-pin J.	T-3AC	Class-C Amp.-Oscillator	2500	——	200	——	——	375	HF-250
HK354 HK354C	150	5.0	10	4000	300	50	14	4.5	3.8	1.1	4-pin J.	T-3AC	Class-C Amp. (Telegraphy)	4000	−690	245	50	48	830	HK354
													Class-C Amp. Plate-Mod.	3000	−550	210	50	35	525	
													Class-B Amp. (Telephony)	3000	−205	78	2.0	10	82	HK354C
													Grid-Modulated Amp.	3000	−400	78	3.0	12	85	
HK354D	150	5.0	10	4000	300	55	22	4.5	3.8	1.1	4-pin J.	T-3AC	Class-C Amp. (Telegraphy)	3500	−490	240	50	38	690	HK354D
													Class-C Amp. Plate-Mod.	3500	−425	210	55	36	525	
HK354E	150	5.0	10	4000	300	60	35	4.5	3.8	1.1	4-pin J.	T-3AC	Class-C Amp. (Telegraphy)	3500	−448	240	60	45	690	HK354E
													Class-C Amp. Plate-Mod.	3000	−437	210	60	45	525	
HK354F	150	5.0	10	4000	300	75	50	4.5	3.8	1.1	4-pin J.	T-3AC	Class-C Amp. (Telegraphy)	3500	−368	250	75	50	720	HK354F
													Class-C Amp. Plate-Mod.	3000	−312	210	75	45	525	

TABLE XIV — TRIODE TRANSMITTING TUBES — *Continued*

Type	Max. Plate Dissipation Watts	Cathode		Max. Plate Voltage	Max. Plate Current Ma.	Max. D.C. Grid Current Ma.	Amp. Factor	Interelectrode Capacitances ($\mu\mu$fd.)			Base [2]	Socket Connections [1]	Typical Operation	Plate Voltage	Grid Voltage	Plate Current Ma.	D.C. Grid Current Ma.	Approx. Grid Driving Power Watts [5]	Approx. Carrier Output Power Watts	Type
		Volts	Amps.					Grid to Fil.	Grid to Plate	Plate to Fil.										
810 [6] 1627	150	10 5.0	4.5 9.0	2250	275	70	36	8.7	4.8	12	4-pin J.	T-3AC	Class-C Amp. (Telegraphy)	2250	−160	275	40	12	475	810 1627
													Class-C Amp. Plate-Mod.	1800	−200	250	50	17	335	
													Class-B Amp. (Telephony)	2250	− 70	100	2.0	4.0	75	
													Grid-Modulated Amp.	2250	−140	100	2.0	4.0	75	
8000 [6]	150	10	4.5	2250	275	40	16.5	5.0	6.4	3.3	4-pin J.	T-3AC	Class-C Amp.-Oscillator	2250	−210	275	25	9.0	475	8000
													Class-C Amp. Plate-Mod.	1800	−320	250	20	8.8	335	
													Class-B Amp. (Telephony)	2250	−145	100	0	5.4	75	
													Grid-Modulated Amp.	2250	−265	100	0	2.5	75	
RK63 RK63A	200	5.0 6.3	10 14	3000	250	60	37	2.7	3.3	1.1	4-pin J.	T-3AC	Class-C Amp. (Telegraphy)	3000	−200	233	45	17	525	RK63 RK63A
													Class-C Amp. Plate-Mod.	2500	−200	205	50	19	405	
													Class-B Amp. (Telephony)	3000	−150	100	1.0	12	100	
													Grid-Modulated Amp.	3000	−250	100	7.0	12.5	100	
T200	200	10	5.75	2500	350	80	16	9.5	7.9	1.6	4-pin J.	T-3AC	Class-C Amp. (Telegraphy)	2500	−280	350	54	25	685	T200
													Class-C Amp. Plate-Mod.	2000	−260	300	54	23	460	
HF300	200	11–12	4.0	3000	275	60	23	6.0	6.5	1.4	4-pin J.	T-3AC	Class-C Amp. (Telegraphy)	3000	−400	250	28	16	600	HF300
													Class-C Amp. Plate-Mod.	2000	−300	250	36	17	385	
													Class-B Amp. (Telephony)	2500	−100	120	0.5	6.0	105	
T814 HV12	200	10	4.0	2500	200	60	12	8.5	12.8	1.7	4-pin J.	T-3AB	Class-C Amp. (Telegraphy)	2500	−240	300	30	10	575	T814 HV12
													Class-C Amp. Plate-Mod.	2000	−370	300	40	20	485	
T822 HV27	200	10	4.0	2500	300	60	27	8.5	13.5	2.1	4-pin J.	T-3AB	Class-C Amp. (Telegraphy)	2500	−175	300	50	15	585	T822 HV27
													Class-C Amp. Plate-Mod.	2000	−195	250	45	15	400	
													Class-B Amp. (Telephony)	2500	− 95	125	5.0	8.0	110	
806 [6]	225	5.0	10	3300	300	50	12.6	6.1	4.2	1.1	4-pin J.	T-3AC	Class-C Amp. (Telegraphy)	3300	−600	300	40	34	780	806
													Class-C Amp. Plate-Mod.	3000	−670	195	27	24	460	
													Class-B Amp. (Telephony)	3300	−280	102	——	10.3	115	
250TH*	250	5.0	10.5	3000	350	100	32	3.5	3.3	0.3	4-pin J.	T-3AC	Class-C Amp. (Telegraphy)	3000	−210	330	75	42	750	250TH
													Class-C Amp. Plate-Mod.	3000	−210	330	75	42	750	
													Class-B Amp. (Telephony)	3000	− 80	125	4.0	15	125	
													Grid-Modulated Amp.	3000	−160	125	4.0	20	125	
250TL*	250	5.0	10.5	3000	350	50	13	3.0	3.5	0.5	4-pin J.	T-3AC	Class-C Amp. (Telegraphy)	3000	−600	330	45	42	750	250TL
													Class-C Amp. Plate-Mod.	3000	−600	330	45	42	750	
													Class-B Amp. (Telephony)	3000	−225	125	2.0	15	125	
													Grid-Modulated Amp.	3000	−450	125	2.0	15	125	
GL159	250	10	9.6	2000	400	100	20	11	17.6	5.0	4-pin GL	T-4BG	Class-C Amp.-Oscillator	2000	−200	400	17	6.0	620	GL159
													Class-C Amp. Plate-Mod.	1500	−240	400	23	9.0	450	
													Class-B Amp. (Telephony)	2000	− 90	190	——	2.5	130	
GL169	250	10	9.6	2000	400	100	85	11.5	19	4.7	4-pin GL	T-4BG	Class-C Amp.-Oscillator	2000	−100	400	42	10	620	GL169
													Class-C Amp. Plate-Mod.	1500	−100	400	45	10	450	
													Class-B Amp. (Telephony)	2000	− 10	190	——	3.5	130	

TABLE XIV — TRIODE TRANSMITTING TUBES — *Continued*

Type	Max. Plate Dissipation Watts	Cathode		Max. Plate Voltage	Max. Plate Current Ma.	Max. D.C. Grid Current Ma.	Amp. Factor	Interelectrode Capacitances ($\mu\mu$fd.)			Base [2]	Socket Connections [1]	Typical Operation	Plate Voltage	Grid Voltage	Plate Current Ma.	D.C. Grid Current Ma.	Approx. Grid Driving Power Watts [5]	Approx. Carrier Output Power Watts	Type
		Volts	Amps.					Grid to Fil.	Grid to Plate	Plate to Fil.										
204A 304A	250	11	3.85	2500	275	80	23	12.5	15	2.3	Special	T-1A	Class-C Amp. (Telegraphy)	2500	−200	250	30	15	450	204A 304A
													Class-C Amp. Plate-Mod.	2000	−250	250	35	20	350	
													Class-B Amp. (Telephony)	2500	− 70	160	——	15	100	
308B	250	14	4.0	2250	325	75	8.0	13.6	17.4	9.3	4-pin W.E.	T-2A	Class-C Amp. (Telegraphy)	1750	−400	300	——	——	350	308B
													Class-C Amp. Plate-Mod.	1250	−320	300	75	——	250	
													Class-B Amp. (Telephony)	1750	−230	215	——	——	125	
HK454H *[6]	250	5.0	11	5000	375	85	30	4.6	3.4	1.4	4-pin J.	T-3AC	Class-C Amplifier	3500	−275	270	60	28	760	HK454H
HK454-L *[6]	250	5.0	11	5000	375	60	12	4.6	3.4	1.4	4-pin J.	T-3AC	Class-C Amplifier	3500	−450	270	45	30	760	HK454-L
212E 241B 312E	275	14	4.0	3000	350	75	16	14.9	18.8	8.6	4-pin W.E. 3-pin W.E.	T-2A T-2AA	Class-C Amp. (Telegraphy)	2000	−225	300	——	——	400	212E 241B 312E
													Class-C Amp. Plate-Mod.	1500	−200	300	75	——	300	
													Class-B Amp. (Telephony)	2000	−120	300	——	——	200	
300T [4]	300	8.0	11.5	3500	350	75	16	4.0	4.0	0.6	4-pin J.	T-3AC	Class-C Amplifier	3500	−600	300	60	——	800	300T
304TL [6] HK304-L *[6]	300	5/10 [13]	26/13	3000	1000	150	10	12	9.0	0.8	Special	T-4BF	Class-C Amplifier	2000	−300	500	——	——	800	304TL HK304-L
HK654	300	7.5	15	4000	600	100	22	6.2	5.5	1.5	4-pin J.	T-3AC	Class-C Amp. (Telegraphy)	2000	−380	500	75	57	720	HK654
													Class-C Amp. Plate-Mod.	2000	−365	450	110	70	655	
													Class-B Amp. (Telephony)	3500	−137	150	13	13	210	
													Grid-Modulated Amp.	3500	−210	150	15	15	210	
833A	300	10	10	3000	500	75	35	12.3	6.3	8.5	Special	T-1AB	Class-C Amp. (Telegraphy)	2000	−200	475	65	25	740	833A
													Class-C Amp. (Telephony)	2500	−300	335	75	30	635	
													Class-B Amp. (Telephony)	3000	− 70	150	2.0	10	150	
270A	350	10	4.0	3000	375	75	16	18	21	2.0	Special	T-1A	Class-C Amp. (Telegraphy)	3000	−375	350	——	——	700	270A
													Class-C Amp. Plate-Mod.	2250	−300	300	80	——	450	
													Class-B Amp. (Telephony)	3000	−180	175	——	——	175	
849	400	11	5.0	2500	350	125	19	17	33.5	3.0	Special	T-1A	Class-C Amp. (Telegraphy)	2500	−250	300	20	8.0	560	849
													Class-C Amp. (Telephony)	2000	−300	300	30	14	425	
													Class-B Amp. (Telephony)	2500	−125	216	1.0	12	180	
831 [4]	400	11	10	3500	350	75	14.5	3.8	4.0	1.4	Special	T-1AA	Class-C Amp. (Telegraphy)	3500	−400	275	40	30	590	831
													Class-C Amp. (Telephony)	3000	−500	200	60	50	360	
													Class-B Amp. (Telephony)	3500	−220	146	——	——	160	

[1] S. — small; M. — medium; J. — jumbo; O. — octal.
[2] Refer to Transmitting Tube Diagrams.
[3] See Chapter Five for discussion of grid driving power.
[4] Obsolete type.
[5] Instant-heating filament for mobile use.
[6] Intermittent commercial and amateur service ratings.
[7] Twin triode. Values, except Inter-element capacities, are for both sections, in push-pull.
[8] The 805 has a variable high-μ grid.
[9] All wire leads. Ratings at 500 Mc.
[10] Gaseous discharge tube for use on 110-volt d.c.
[11] Output at 112 Mc.
[12] Calculated at 33% efficiency for 100% modulation.
[13] Multiple-unit tube with dual filaments which can be connected in series or parallel.

Frequency limits:
* May be used at full ratings on 56–60 Mc. band and lower.
** May be used at full ratings on 112-Mc. band and lower.
*** May be used at full ratings on 224-Mc. band and lower.
**** May be used at full rating above 300 Mc.

TABLE XV — TETRODE AND PENTODE TRANSMITTING TUBES

Type	Max. Plate Dissipation Watts	Cathode Volts	Cathode Amps.	Max. Plate Voltage	Max. Screen Voltage	Max. Screen Dissipation Watts	Interelectrode Capacitances ($\mu\mu$fd.) Grid to Fil.	Grid to Plate	Plate to Fil.	Base [1]	Socket Connections [2]	Typical Operation	Plate Voltage	Screen Voltage	Suppressor Voltage	Grid Voltage	Plate Current Ma.	Screen Current Ma.	Grid Current Ma.	Screen [3] Resistor Ohms	Approx. Grid Driving Power Watts [4]	Approx. Carrier Output Power Watts	Type
HY63 *[6]	3.0	2.5 1.25	0.1125 0.225	250	180	0.6	9.5	0.15	7.4	7-pin O.	T-8DB	Class-C Amp.-Osc.	250	135	—	− 22.5	25	4.0	2.0	—	0.2	4.3	HY63
												Class-C Amp. Plate-Mod.	250	135	—	− 35	20	3.0	2.0	—	0.2	3.5	
RK64 *[5]	6.0	6.3	0.5	400	100	3.0	10	0.4	9.0	5-pin M.	T-5BB	Class-C Amp. (Telegraphy)	400	100	30	− 30	35	10	3.0	—	0.18	10	RK64
												Class-C Amp. Plate-Mod.	300	—	30	− 30	26	8.0	4.0	30000	0.2	6.0	
1610	6.0	2.5	1.75	400	200	2.0	8.6	1.2	13	5-pin M.	T-5CA	Class-C Amp.-Oscillator	400	150	—	− 50	22.5	7.0	1.5	—	0.1	5.0	1610
RK56 *	8.0	6.3	0.55	300	300	4.5	10	0.2	9.0	5-pin M.	T-5BB	Class-C Amp. (Telegraphy)	400	300	—	− 40	62	12	1.6	—	0.1	12.5	RK56
												Class-C Amp. Plate-Mod.	250	200	—	− 40	50	10	1.6	2800	0.28	8.5	
RK23		2.5	2.0									Class-C Amp. (Telegraphy)	500	200	45	− 90	55	38	4.0	—	0.5	22	RK23
RK25 RK25B [5]	10	6.3	0.9	500	250	8	10	0.2	10	7-pin M.	T-7C	Class-C Amp. (Telephony)	400	150	0	− 90	43	30	6.0	8300	0.8	13.5	RK25 RK25B
												Suppressor-Modulated Amp.	500	200	−45	− 90	31	39	4.0	—	0.5	6.0	
RK45 [5]		12.6	0.45																				RK45
HY65*[6]	10	6.3	0.8	450	250	2.5	9.5	0.12	7.4	7-pin O.	T-8DB	Class-C Amp.-Osc.	450	200	—	− 45	63	7.0	3.0	—	0.5	19	HY65
												Class-C Amp. Plate-Mod.	350	300	—	− 45	63	7.0	3.0	—	0.5	14	
1613	10	6.3	0.7	350	275	2.5	8.5	0.5	11.5	7-pin O.	T-8CB	Class-C Amp. (Telegraphy)	350	200	—	− 35	50	10	3.5	20000	0.22	9	1613
												Class-C Amp. Plate-Mod.	275	200	—	− 35	42	10	2.8	10000	0.16	6.0	
837 RK44 [5]	12	12.6	0.7	500	300	8	16	0.2 [11]	10	7-pin M.	T-7C	Class-C Amp. (Telegraphy)	500	200	40	− 75	60	15	4.0	20000	0.4	22	837 RK44
												Class-C Amp. (Telephony)	400	140	40	− 40	45	20	5.0	13000	0.3	11	
												Suppressor-Modulated Amp.	500	—	−65	− 20	30	23	3.5	14000	0.1	5.0	
802 [7]	13	6.3	0.9	600	250	6.0	12	0.15 [11]	8.5	7-pin M.	T-7C	Class-C Amp. (Telegraphy)	600	250	40	−120	55	16	2.4	22000	0.30	23	802
												Class-C Amp. Plate-Mod.	500	245	40	− 40	40	15	1.5	16300	0.10	12	
												Suppressor-Mod. Amp.	600	250	−45	−100	30	24	5.0	14500	0.6	6.3	
HY6V6-GTX*	15	6.3	0.5	300	225	2.5	10	0.4	8.5	7-pin O.	T-8D	Class-C Amp.-Osc.	300	200	—	− 45	60	7.5	2.5	—	0.25	12	HY6V6-GTX
												Class-C Amp. Plate-Mod.	250	200	—	− 45	60	6.0	2.0	15000	0.4	10	
HY60 *	15	6.3	0.5	425	200	2.5	11	0.19	10.2	5-pin M.	T-5BB	Class-C Amp. (Telegraphy)	425	200	—	− 62.5	60	7.0	3.0	—	0.25	17	HY60
												Class-C Amp. Plate-Mod.	325	200	—	− 45	60	8.5	2.5	—	0.2	10	
306A	15	2.75	2.0	300	300	6.0	13	0.35	13	5-pin M.	T-5CB	Class-C Amp. (Telephony)	300	180	—	− 50	36	15	3.0	8000	—	7.0	306A
307A	15	5.5	1.0	500	250	6.0	15	0.55	12	5-pin M.	T-5C	Class-C Amp. (Telegraphy)	500	250	0	− 35	60	13	1.4	20000	—	20	307A
												Suppressor-Modulated Amp.	500	200	−50	− 35	40	20	1.5	14000	—	6.0	
832 **	15	6.3	0.8	400	250	5.0	7.5	0.05 [11]	3.8	Special	T-9B	Class-C Amp. (Telegraphy)	400	250	—	− 60	90	18	0.3	8300	0.18	22	832
												Class-C Amp. (Telephony)	325	210	—	− 50	68	15	1.2	7500	0.06	12	
844 [5]	15	2.5	2.5	500	180	3.0	9.5	0.15	7.5	5-pin M.	T-5BB	Class-C Amp. (Telegraphy)	500	175	—	−125	25	—	5.0	—	—	9.0	844
												Class-C Amp. (Telephony)	500	150	—	−100	20	—	—	—	—	4.0	
865	15	7.5	2.0	750	175	3.0	8.5	0.1 [11]	8.0	4-pin M.	T-4C	Class-C Amp. (Telegraphy)	750	125	—	− 80	40	—	5.5	—	1.0	16	865
												Class-C Amp. (Telephony)	500	125	—	−120	40	—	9.0	—	2.5	10	
1619	15	2.5	2.0	400	300	3.5	10.5	0.35	12.5	7-pin O.	T-8D	Class-C Amp. (Telegraphy)	400	300	—	− 55	75	10.5	5.0	9500	0.36	19.5	1619
												Class-C Amp. Plate-Mod.	325	285	—	− 50	62	7.5	2.8	5000	0.18	13	
254A	20	5.0	3.25	750	175	5.0	4.6	0.1	9.4	4-pin M.	T-4C	Class-C Amplifier	750	175	—	− 90	60	—	—	—	—	25	254A
6L6	21	6.3	0.9	375	300	3.5	13	0.5	12.5	7-pin O.	T-8D	Class-C Amp.-Oscillator	375	200	—	− 35	88	9.0	3.5	—	0.18	17	6L6
6L6GX	21	6.3	0.9	500	300	3.5	11	1.5	7.0	7-pin O.	T-8D	Class-C Amp. (Telegraphy)	500	250	—	− 50	90	9.0	2.0	—	0.25	30	6L6GX
												Class-C Amp. Plate-Mod.	325	225	—	− 45	90	9.0	3.0	—	0.25	20	

TABLE XV — TETRODE AND PENTODE TRANSMITTING TUBES — *Continued*

Type	Max. Plate Dissipation Watts	Cathode Volts	Cathode Amps.	Max. Plate Voltage	Max. Screen Voltage	Max. Screen Dissipation Watts	Interelectrode Capacitances ($\mu\mu$fd.) Grid to Fil.	Grid to Plate	Plate to Fil.	Base [1]	Socket Connections [2]	Typical Operation	Plate Voltage	Screen Voltage	Suppressor Voltage	Grid Voltage	Plate Current Ma.	Screen Current Ma.	Grid Current Ma.	Screen [3] Resistor Ohms	Approx. Grid Driving Power Watts [4]	Approx. Carrier Output Power Watts	Type
HY6L6-GTX*	21	6.3	0.9	500	300	3.0	11	0.5	8.0	7-pin O.	T-8D	Class-C Amp.-Osc.	500	250	—	− 50	90	9.0	2.0	—	0.5	30	HY6L6-GTX
												Class-C Amp. Plate-Mod.	400	225	—	− 45	80	9.0	3.0	16000	0.8	20	
T21 *	21	6.3	0.9	400	300	3.5	13	0.7	12	6-pin M.	T-6B	Class-C Amp. (Telegraphy)	400	250	—	− 50	95	8.0	3.0	—	0.2	25	T21
												Class-C Amp. Plate-Mod.	350	200	—	− 45	65	17	5.0	—	0.35	14	
RK49	21	6.3	0.9	400	300	3.5	11.5	1.4	10.6	6-pin M.	T-6B	Class-C Amp. (Telegraphy)	400	250	—	− 50	95	8.0	3.0	—	0.2	25	RK49
												Class-C Amp. (Telephony)	300	200	—	− 45	60	15	5.0	6700	0.34	12	
1614 *	21	6.3	0.9	375	300	3.5	10	0.4	12.5	7-pin O.	T-8D	Class-C Amp. (Telegraphy)	375	250	—	− 40	80	10	2.0	12500	0.1	21	1614
												Class-C Amp. Plate-Mod.	325	—	—	− 40	70	8.0	2.0	10000	0.1	15	
RK41 * [5]	25	2.5	2.4	600	300	3.5	13	0.2	10	5-pin M.	T-5BB	Class-C Amp. (Telegraphy)	600	300	—	− 90	93	10	3.0	—	0.38	36	RK41
RK39 *		6.3	0.9									Class-C Amp. (Telephony)	475	250	—	− 50	85	9.0	2.5	25000	0.2	26	RK39
HY61/807 *	25	6.3	0.9	600	300	3.5	11	0.2	7.0	5-pin M.	T-5BB	Class-C Amp. (Telegraphy)	600	250	—	− 50	100	9.0	3.0	39000	0.22	27.5	HY61/807
												Class-C Amp. (Telephony)	475	225	—	− 50	83	9.0	2.0	25000	0.13	24	
815 [7] [10]	25	6.3	1.6	500	200	4.0	13.3	0.2 [11]	8.5	8-pin O.	T-8FA [12]	Class-C Amp.-Oscillator	500	200	—	− 45	150	17	2.5	—	0.13	56	815
												Class-C Amp. Plate-Mod)	400	175	—	− 45	150	15	3.0	—	0.16	45	
254B	25	7.5	3.25	750	150	5.0	11.2	0.085	5.4	4-pin M.	T-4C	Class-C Amplifier	750	150	—	−135	75	—	—	—	—	30	254B
1624 *	25	2.5	2.0	600	300	3.5	11	0.25	7.5	5-pin M.	T-5DC	Class-C Amp. (Telegraphy)	600	300	—	− 60	90	10	5.0	12000	0.43	35	1624
												Class-C Amp. Plate-Mod.	500	275	—	− 50	75	9.0	3.3	25000	0.25	24	
RK66 *	30	6.3	1.5	600	300	3.5	12	0.25	10.5	5-pin M.	T-5C	Class-C Amp.-Oscillator	600	300	—	− 60	90	11	5.0	—	0.5	40	RK66
												Class-C Amp. Plate-Mod.	500	—	—	− 50	75	8.0	3.2	25000	0.23	25	
807 * [7]	30	6.3	0.9	750	300	3.5	11	0.2 [11]	7.0	5-pin M.	T-5BB	Class-C Amp. (Telegraphy)	750	250	—	− 50	100	8.0	3.0	—	0.22	50	807
1625 * [7]		12.6	0.45									Class-C Amp. Plate-Mod.	600	275	—	− 78	100	9.0	3.0	—	0.1	37.5	1625
RK20 [5]	40	7.5	3.0	1250	300	15	14	0.01	12	5-pin M.	T-5C	Class-C Amp. (Telegraphy)	1250	300	45	−100	92	36	11.5	—	1.6	84	RK20 RK20A RK46
RK20A		7.5	3.25									Class-C Amp. (Telephony)	1000	300	0	−100	75	30	10	23000	1.3	52	
RK46 [5]		12.6	2.5									Suppressor-Modulated Amp.	1250	300	−45	−100	48	44	11.5	—	1.5	21	
												Grid-Modulated Amp.	1250	300	45	−142	40	7.0	1.8	—	1.5	20	
HY69 * [6]	40	6.3	1.5	600	250	5.0	7.0	0.25	6.0	5-pin M.	T-5D	Class-C Amp.-Oscillator	600	250	—	− 60	100	12.5	4.0	30000	0.25	42	HY69
												Class-C Amp. Plate Mod.	600	250	—	− 60	100	12.5	5.0	30000	0.35	42	
												Modulated Doubler	600	200	—	−300	90	11.5	6.0	35000	2.8	27	
829 ** [10]	40	6.3	2.25	500	225	40	15.2	0.1 [11]	6.5	Special	T-9B	Class-C Amp.-Oscillator	500	200	—	− 45	240	32	12	9300	0.7	83	829
												Class-C Amp. Plate-Mod.	425	200	—	− 60	212	35	11	6400	0.8	63	
												Grid-Modulated Amp.	500	200	—	− 38	120	10	2.0	—	0.5	23	
HY1269 * [6]	40	12.6	1.5	750	300	5.0	15.35	0.19	7.35	5-pin M.	T-5DB [13]	Class-C Amp.-Oscillator	750	300	—	− 70	120	12.5	4	—	0.25	63	HY1269
												Class-C Amp. Plate Mod.	600	250	—	− 70	100	10.0	4	35000	0.35	42	
												Grid-Modulated Amp.	750	300	—	—	80	—	—	—	—	20	
RK47	50	10	3.25	1250	300	10	13	0.12	10	5-pin M.	T-5D	Class-C Amp. (Telegraphy)	1250	300	—	− 70	138	14	7.0	—	1.0	120	RK47
												Class-C Amp. Plate-Mod.	900	300	—	−150	120	17.5	6.0	—	1.4	87	
												Grid-Modulated Amp.	1250	300	—	− 30	60	2.0	0.9	—	4.0	25	
312A	50	10	2.8	1250	500	20	15.5	0.15	12.3	6-pin M.	T-6C	Class-C Amp. (Telegraphy)	1250	300	20	− 55	100	36	5.5	—	0.7	90	312A
												Class-C Amp. Plate-Mod.	1000	—	40	− 40	95	35	7.0	22000	1.0	65	
												Suppressor-Mod. Amp.	1250	—	−85	− 50	50	42	5.0	22000	0.55	23	

TABLE XV — TETRODE AND PENTODE TRANSMITTING TUBES — *Continued*

Type	Max. Plate Dissipation Watts	Cathode		Max. Plate Voltage	Max. Screen Voltage	Max. Screen Dissipation Watts	Interelectrode Capacitances ($\mu\mu$fd.)			Base [1]	Socket Connections [2]	Typical Operation	Plate Voltage	Screen Voltage	Suppressor Voltage	Grid Voltage	Plate Current Ma.	Screen Current Ma.	Grid Current Ma.	Screen [3] Resistor Ohms	Approx. Grid Driving Power Watts [4]	Approx. Carrier Output Power Watts	Type
		Volts	Amps.				Grid to Fil.	Grid to Plate	Plate to Fil.														
804 [7]	50	7.5	3.0	1500	300	15	16	0.01 [11]	14.5	5-pin M.	T-5C	Class-C Amp. (Telegraphy)	1500	300	45	−100	100	35	7.0	34000	1.95	110	804
												Class-C Amp. Plate-Mod.	1250	250	50	− 90	75	20	6.0	50000	0.75	65	
												Grid-Modulated Amp.	1500	300	45	−130	50	13.5	3.7	——	1.3	28	
												Suppressor-Mod. Amp.	1500	300	−50	−115	50	32	7.0	——	0.95	28	
825 ****[14]	50	6.3	0.75	2000	3600	——	3.4	——	——	Special	T-9C	Class-C Amp. (Telegraphy)	1500	3600	800	− 40	45	1.5	2.3	——	——	35	825
												Grid-Modulated Amp.	1500	3600	800	− 33	25	1.3	0.5	——	——	9.0	
305A	60	10	3.1	1000	200	6	10.5	0.14	5.4	4-pin M.	T-4CE	Class-C Amp. (Telegraphy)	1000	200	——	−200	125	——	——	——	——	85	305A
												Class-C Amp. (Telephony)	800	200	——	−270	125	——	——	——	——	70	
HY67	65	6.3 12.6	4.0 2.0	1250	300	10	——	——	——	5-pin M.	T-5DB	Class-C Amp. (Telegraphy)	1250	300	——	− 80	175	22.5	10	——	1.5	52	HY67
												Class-C Amp. Plate-Mod.	1000	300	——	−150	145	17.5	14	——	2.0	101	
												Grid-Modulated Amp.	1250	300	——	——	78	——	——	——	——	32.5	
814 [7]	65	10	3.25	1500	300	10	13.5	0.1 [11]	13.5	5-pin M.	T-5D	Class-C Amp. (Telegraphy)	1500	300	——	− 90	150	24	10	50000	1.5	160	814
												Class-C Amp. Plate-Mod.	1250	300	——	−150	145	20	10	48000	3.2	130	
												Grid-Modulated Amp.	1500	250	——	−120	60	3.0	2.5	——	4.2	35	
282A	70	10	3.0	1000	250	5.0	12.2	0.2	6.8	4-pin M.	T-4C	Class-C Amp. (Telegraphy)	1000	150	——	−160	100	——	——	——	——	33	282A
												Class-C Amp. Plate-Mod.	750	150	——	−180	100	——	50	——	——	50	
8001 [7]	75	5.0	7.5	2000	500	25	11	0.1 [11]	5.5	7-pin J.	T-7CB	Class-C Amp. (Telegraphy)	2000	500	——	−200	150	11	6.0	33000	1.4	230	8001
												Class-C Amp. Plate-Mod.	1800	400	——	−130	135	11	8.0	16000	1.7	178	
												Suppressor-Mod. Amp.	2000	500	−300	−130	55	27	3.0	——	0.4	35	
HK257 *	75	5.0	7.5	4000	500	25	13.8	0.04	6.7	7-pin J.	T-7CB	Class-C Amp. (Telegraphy)	2000	500	60	−200	150	11	6.0	——	1.4	230	HK257
												Class-C Amp. Plate-Mod.	1800	400	60	−130	135	11	8.0	——	1.7	178	
												Suppressor-Modulated Amp.	2000	500	−300	−130	55	27	3.0	——	0.4	35	
828 [7]	80	10	3.25	2000	750	23	13.5	0.05 [11]	14.5	5-pin M.	T-5C	Class-C Amp. (Telegraphy)	1500	400	75	−100	180	28	12	40000	2.2	200	828
												Class-C Amp. Plate-Mod.	1250	400	75	−140	160	28	12	30000	2.7	150	
												Grid-Modulated Amp.	1500	400	75	−150	80	4.0	1.3	——	1.3	41	
RK28 [5]	100	10	5.0	2000	400	35	15	0.02	15	5-pin J.	T-5C	Class-C Amp. (Telegraphy)	1500	400	45	−100	135	52	13	21000	2.0	155	RK28
												Class-C Amp. (Telephony)	2000	400	45	−100	85	65	13	——	1.8	60	
												Suppressor-Modulated Amp.	2000	400	−45	−140	80	20	4.0	——	3.5	75	
												Grid-Modulated Amplifier	2000	400	0	− 38	75	30	——	——	0.9	50	
RK48 [5] RK48A	100	10	5.0	2000	400	22	17	0.13	13	5-pin J.	T-5D	Class-C Amp. (Telegraphy)	2000	400	——	−100	180	40	6.5	——	1.0	250	RK48 RK48A
												Class-C Amp. (Telephony)	1500	400	——	−100	148	50	6.5	22000	1.0	165	
												Grid-Modulated Amplifier	1500	400	——	−145	77	10	1.5	——	1.6	40	
813	100	10	5.0	2000	400	22	16.3	0.2 [11]	14	7-pin J.	T-7DA	Class-C Amp. (Telegraphy)	2000	400	——	− 90	180	15	3.0	107000	0.5	260	813
												Class-C Amp. (Telephony)	1600	400	——	−130	150	20	6.0	21600	1.2	175	
												Grid-Modulated Amplifier	2000	400	——	−120	75	3.0	——	——	——	50	
850	100	10	3.25	1250	175	10	17	0.25 [11]	25	4-pin J.	T-3B	Class-C Amp. (Telegraphy)	1250	175	——	−150	160	——	35	——	10	130	850
												Class-C Amp. (Telephony)	1000	140	——	−100	125	——	40	——	10	65	
												Grid-Modulated Amplifier	1250	175	——	− 13	110	——	——	——	——	40	
860	100	10	3.25	3000	500	10	7.75	0.08 [11]	7.5	4-pin M.	T-4CB	Class-C Amp.-Oscillator	3000	300	——	−150	85	25	15	——	7.0	165	860
												Class-C Amp. Plate-Mod.	2000	220	——	−200	85	25	38	100000	17	105	

TABLE XV — TETRODE AND PENTODE TRANSMITTING TUBES — *Continued*

Type	Max. Plate Dissipation Watts	Cathode		Max. Plate Voltage	Max. Screen Voltage	Max. Screen Dissipation Watts	Interelectrode Capacitances ($\mu\mu$fd.)			Base [1]	Socket Connections [2]	Typical Operation	Plate Voltage	Screen Voltage	Suppressor Voltage	Grid Voltage	Plate Current Ma.	Screen Current Ma.	Grid Current Ma.	Screen Resistor Ohms [3]	Approx. Grid Driving Power Watts [4]	Approx. Carrier Output Power Watts	Type
		Volts	Amps.				Grid to Fil.	Grid to Plate	Plate to Fil.														
RK28A	125	10	5.0	2000	400	35	15	0.02	15	5-pin J.	T-5C	Class-C Amp. (Telegraphy)	2000	400	45	−100	170	60	10	—	1.6	250	RK28A
												Class-C Amp. Plate-Mod.	1500	400	45	−100	135	54	10	18500	1.6	150	
												Grid-Modulated Amp.	2000	400	45	− 55	80	18	2.0	—	0.5	60	
												Suppressor-Mod. Amp.	2000	—	−45	−115 [7]	90	52	11.5	30000	1.5	60	
803	125	10	5.0	2000	600	30	17.5	0.15 [11]	29	5-pin J.	T-5C	Class-C Amp. (Telegraphy)	2000	500	40	− 90	160	45	12	—	2.0	210	803
												Class-C Amp. (Telephony)	1600	500	100	− 80	150	20	4.0	20000	4.0	155	
												Suppressor-Modulated Amp.	2000	—	−110	−100	80	48	15	35000	2.5	53	
												Grid-Modulated Amplifier	2000	600	40	− 80	80	20	4.0	—	2.0	53	
RK65	215	5.0	14	3000	500	35	10.5	0.24	4.75	4-pin J.	T-3BC	Class-C Amp. (Telegraphy)	3000	400	—	−100	240	70	24	—	6.0	510	RK65
												Class-C (Plate & Screen Mod.)	2500	—	—	−150	200	70	22	30000	6.3	380	
861	400	11	10	3500	750	35	14.5	0.1 [11]	10.5	Special	T-1B	Class-C Amp. (Telegraphy)	3500	500	—	−250	300	40	40	—	30	700	861
												Class-C Amp. (Telephony)	3000	375	—	−200	200	—	55	70000	35	400	

[1] S. — small; M. — medium; O. — octal; J. — jumbo.
[2] See Transmitting Tube Base Diagrams.
[3] In plate-and-screen modulated Class-C amplifiers, connect screen-dropping resistor direct to plate and by-pass for r.f. only. This does not apply to the 828.
[4] See Chapter 4–8 for discussion of grid driving power.
[5] Obsolete type.
[6] Instant-heating filament for mobile operation.
[7] Intermittent commercial and amateur service ratings.
[8] Triode connection — screen-grid tied to plate.
[9] Calculated on basis of 33% efficiency at 100% modulation.
[10] Dual tetrode. Values for both sections, in push-pull.
[11] With external shielding.
[12] Terminals 3 and 6 must be connected together.
[13] Early tubes of this type do not have center-tapped filament.
[14] Inductive output amplifier, with separate output and current-collecting electrodes, for operation above 300 Mc. In using values shown in tables, for "Plate" read "Collector," for "Screen" read "Grids No. 2 & 3," for "Suppressor" read "Grid No. 4," and for "Grid" read "D.C. Grid No. 1."

Frequency limits:
* May be used at full ratings on 56–60 Mc. band and lower.
** May be used at full ratings on 112-Mc. band and lower.
*** May be used at full ratings on 224-Mc. band and lower.
**** May be used at full ratings above 3000 Mc.

TABLE XVI — TELEVISION TRANSMITTING TUBES

Type	Name	Socket Connections [1]	Heater		Use	Collector Voltage	Pattern Electrode Voltage	Anode No. 2 Voltage	Anode No. 1 Voltage	Cut-off Grid Voltage [2]	Signal Plate Voltage	Collector Current μa. [3]	Beam Current μa.	Pattern Electrode Current [4]	Signal Plate Input [5]	Beam [6] Resolution Capability	Signal Output Volts	Type
			Volts	Amps.														
1840	Orthicon	M	6.3	0.6	Direct and film pickup	—	—	300 [7]	300	−40	—	—	1.0	—	—	—	0.03–0.15	1840
1847	Iconoscope	A	6.3	0.6	Direct pickup	600	—	600	150	−120	—	—	—	—	—	—	—	1847
1848	Iconoscope	N	6.3	0.6	Direct pickup	1200	—	1000 [7]	300	−40	—	0.1	0.25	—	—	—	0.015–0.075	1848
1849	Iconoscope	J	6.3	0.6	Film pickup	1000	—	1000	360	−25	—	0.1	—	—	—	—	—	1849
1850	Iconoscope	J	6.3	0.6	Direct pickup	Same as 1849												1850
1898	Monoscope	E	2.5	2.1	Test pattern	—	950	1000	300	−60	—	—	2.0	2.0	—	—	—	1898
1899	Monoscope	K	2.5	2.1	Test pattern	1700	1500	1500	390	−60	—	—	4.0	2.5	—	500	—	1899
2203	Monotron	L	2.5	2.1	Test pattern	—	—	1000	400	−20	−150	—	—	—	5	300	0.1	2203

[1] Refer to Cathode Ray Tube Socket Connections.
[2] Adjust bias for minimum (most negative) value for satisfactory signal. Maximum resistance in grid circuit should not exceed 1 megohm.
[3] Collector current measurements made with mosaic not illuminated.
[4] Peak-to-peak signal value in μa.
[5] In mw./sq. cm. max.
[6] With full scanning.
[7] Accelerating electrode (Grid No. 2) voltage same as Anode No. 2 voltage.

CHAPTER TWENTY-ONE

Operating the Station

THE TRANSMITTER should be adjusted for satisfactory, stable operation. Do not try to work too near the edge of an amateur band. Keep well *within* the estimated accuracy of your frequency measuring equipment and means of measurement. Check frequency often. Crystal control provides a certain degree of "frequency insurance" but do not omit checks for harmonics and parasitics that may be present with the signal, as well as for frequency changes due to quartz temperature or circuit element capacities if near a band edge. Other control methods require *tremendously increased precautions.* FCC monitoring stations are on the job of checking notes, frequency and other possible discrepancies, so it pays to be watchful.

Method in operating is important, and in this chapter we shall discuss the common practices. The *good* operator does not sit down and send a long call when he wants to work someone. He *listens in.* He covers the dial thoroughly. The fellow that is admired for his good operating is the one who is always calling some particular station instead of using CQ. Because he *listens* until he hears someone to work and *then* goes after him, our good operator gets his man nearly every time. A good operator chooses the proper time to call, he makes plain signals, and he does not call too long. A short call is sufficient because if a station does not get the call it is likely that he is listening to another station. A long call makes the receiving operator lose patience and look for someone else.

Pride in technique is the earmark of the successful amateur among his fellows. Code proficiency sets apart the real seasoned operator from the one who builds equipment only to tear it apart again. Engineering or applied common sense are essential to both the operator and experimenter. Operating ability is just as essential and important in radio-telephone operating as in code work — perhaps it is more essential and more rare, for understanding of phonetics must contribute to conciseness with careful system, as in the airways service, for effective two-way work. The penalty for not having "what it takes" in operating is ineffectiveness in results, as well as to win the name of "lid" by bungling.

Too often the beginner-operator operates his set like a plaything; the aim should be to operate with a serious and constructive purpose, not for novelty or mere entertainment. It must be remembered that radio communication is not an individual plaything but the interference one causes may affect many others. It may cause pleasure or expressions of annoyance depending on the care and thoughtfulness with which one operates. All of this merely to introduce the plea that time be given to the brief study of operating technique before going on the air.

Many the amateur who complains about his results or blames his equipment when the real fault was with proper timing of calls and failure to do enough intelligent listening. Patience and judgment, and familiarity with tuning methods and ways, and standard procedures are absolutely essential to full success and enjoyment.

The operator who sends forty or more CQs and signs two or three times in a slipshod manner gains the respect of no one. His call may be impossible to identify. His lack of operating judgment seriously impairs and handicaps *his own success and enjoyment* in addition to causing other amateurs to form an unfavorable opinion of his work and the uncalled-for interference he creates. *By proper* procedure the number of two-way contacts (QSOs) and the enjoyment and profit in each will be a maximum.

The adjustment on the receiver has much to do with successful operation, too. The good receiving operator notes the dial setting and when he has completed calling in proper fashion, he waits a moment and then tunes above or below the logged dial setting just in case something has shifted slightly in the receiver or transmitter. The best operator has patience and waits a few minutes in case of delay at the transmitter or in case fading signals make a second answer necessary. Upon the station and its *operation* depend the possibility of good communication records.

An operator with a clean-cut, slow, steady method of sending has a big advantage over the poor operator. Good sending is partly a matter of practice but patience and judgment are just as important qualities of an operator as a good "fist."

Accuracy is of first importance. Then *speed*

must be considered. Very often, transmission at moderate speeds moves traffic or insures understandable conversation better than fast sending. A great deal depends on the proficiency and good judgment of the two operators concerned. Fast sending is helpful only when two fast operators work together.

As time is a factor, uniform practices in operating are necessary to insure a ready understanding. So proficiency in the commonly-used abbreviations and in knowledge of uniform operating practices is to be desired. Proficiency comes with practice. In Chapter Twenty-Two are the "Q" signals used by amateur operators.

• PROCEDURE

Official ARRL Stations observe the rules regarded as "standard practice" carefully. Any actively-operating stations will do well to copy these rules, to post them conspicuously in the station, and to follow them when operating.

1. **Calls** should be made by transmitting *not more than three times* the call signal of the station called, and DE, followed by one's own call signal sent *not more than three times*, thus: VE2BE VE2BE VE2BE DE W1AW W1AW W1AW. In amateur practice this form is repeated completely once or twice. The call signal of the calling station *must* be inserted at frequent intervals for identification purposes. Repeating the call signal of the called station five times and signing not more than twice has proved excellent practice in connection with break-in operation (the receiver being kept tuned to the frequency of the called station). The use of a break-in system is highly recommended to save time and reduce unnecessary interference.

The ARRL method of using the general inquiry call (CQ) is also that of calling three times, signing three times, and repeating three times. CQ is not to be used when testing or when the sender is not expecting or looking for an answer. After CQ, the dial should be covered thoroughly for two or three minutes looking for replies.

The directional CQ: To reduce the number of useless answers and lessen QRM, every CQ call should be made informative when possible. Stations desiring communication should follow each CQ by an indication of direction, district, state, continent, country or the like. Examples:

A United States station looking for any Hawaiian amateur calls: CQ K6 CQ K6 CQ K6 DE W1UE W1UE W1UE K. A western station with traffic for the east coast when looking for an intermediate relay station calls: CQ EAST CQ EAST CQ EAST DE W5CEZ W5CEZ W5CEZ K. A station with messages for points in Massachusetts calls: CQ MASS CQ MASS CQ MASS DE W8KKG W8KKG W8KKG K. In each example indicated it is understood that the combination used is repeated three times.

2. **Answering a call:** Call three times (or less); send DE; sign three times (or less); and after contact is established decrease the use of the call signals of both stations *to once or twice.* Example:

W1GNF DE W1AW GE OM GA K (meaning, "Good evening, old man, go ahead").

3. **Ending signals and sign off:** The proper use of $\overline{\text{AR}}$, K and $\overline{\text{VA}}$ ending signals is as follows: $\overline{\text{AR}}$ (end of transmission) shall be used at the end of messages during communication; and also at the end of a call, *indicating when so used that communication is not yet established.* In the case of CQ calls, the international regulations recommend that K shall follow. K (invitation to transmit) shall also be used at the end of each transmission *when answering or working* another station, carrying the significance of "go ahead." $\overline{\text{VA}}$ (or $\overline{\text{SK}}$) shall be used by each station only when signing off, this followed by the call of the station being worked and your own call sent once for identification purposes. Examples:

($\overline{\text{AR}}$) — W1KQY DE W1CTI $\overline{\text{AR}}$ (showing that W1CTI has not yet gotten in touch with W1KQY but has called and is now listening for his reply). Used after the signature between messages, it indicates the end of one message. There may be a slight pause before starting the second of the series of messages. The courteous and thoughtful operator allows time for the receiving operator to enter the time on the message and put another blank in readiness for the traffic to come. If K is added it means that the operator wishes his first message acknowledged before going on with the second message. If no K is heard, preparations should be made to continue copying.

(K) — W1JEQ DE W6AJM R K. (This arrangement is very often used for the acknowledgment of a transmission. When anyone overhears this he at once knows that the two stations are in touch, communicating with each other, that W1JEQ's transmission was all understood by W6AJM, and that W6AJM is telling W1JEQ to go ahead with more of what he has to say.) W9KJY DE W7NH NR 23 R K. (Evidently W9KJY is sending messages to W7NH. The contact is good. The message was all received correctly. W7NH tells W9KJY to "go ahead" with more.)

($\overline{\text{VA}}$) — R NM NW CUL VY 73 $\overline{\text{AR}}$ $\overline{\text{VA}}$ W6TI DE W7WY. (W7WY says "I understand OK, no more now, see you later, very best regards. I am through with you for now and will listen for whomever wishes to call. W7WY signing off" with W6TI.)

4. If a station sends **test signals** to adjust the transmitter or at the request of another station to permit the latter to adjust its receiving apparatus, the signals must be composed of a series of V's with the call signal of the transmitting station at frequent intervals.

5. When a station receives a call without being certain that the call is intended for it, it should not reply until the call has been repeated and is understood. If it receives the call but is uncertain of the call signal of the sending station, it should answer using the signal · · — — · · (?) instead of the call signal of this latter station. QRZ? (see Appendix) is the appropriate signal to use, followed by your call,

to ask who is calling and get this station to call again.

6. Several **radiograms** may be transmitted **in series** (QSG. . . . .) with the consent of the station which is to receive them. As a general rule, long radiograms should be transmitted in sections of approximately fifty words, each ending with · · — — · · (?) meaning, "Have you received the message correctly thus far?"

7. **Receipting** for conversation or traffic: Never send a single acknowledgment until the transmission has been entirely received. "R" means, "All right, OK, I understand *completely.*" When a poor operator, commonly called a "lid," has only received part of a message, he answers, "R R R R R R R R R R, sorry, missed address and text, pse repeat" and every good operator who hears, raves inwardly. Use R *only* when *all* is received correctly. Example:

When all the message has been received correctly a short call with "NR 155 R K" or simply "155 K" is sufficient.

8. **Repeats:** When most of the message was lost the call should be followed by the correct abbreviations (see Appendix) from the international list, asking for a repetition of the address, text, etc. (RPT ADR AND TXT K.) When but a few words were lost the last word received correctly is given after ?AA, meaning that "all after" this should be repeated. ?AB for "all before" a stated word should be used if most of the first part of the copy is missing. ?BN ..... AND ..... (two stated words) asks for a fill "between" certain sections. If only a word or two is lost this is the quickest method to get it repeated.

Do not send words twice (QSZ) unless it is requested. Send single. Do not fall into the bad habit of sending double *without a request* from fellows you work.

Do not accept or start incomplete messages.

9. **A file of messages** handled must be kept, FCC regulations requiring that they be maintained on hand at least one year.

10. The operator will *never make changes or alterations in the texts or other portions of messages passing through his hands.* However slight or however desirable such changes may seem, the changing of a message without proper authority or without the knowledge of the originator of the message may be considered the "unpardonable sin." The proper thing to do of course is to notify the party filing the message or the originating station of your observations, secure permission from the proper source for making the change by sending a "service message" or other means. If the case seems urgent, the traffic should not be delayed but should be delivered or forwarded with appropriate notation or service accompanying it.

• ACTIVITIES—CONTESTS

Operating in the amateur bands offers many thrills. Routine communication is possible, but even the most consistent and reliable communication by amateur radio is not at all limited to routine. The "unexpected" is always around the corner. A pleasant experience may arrive in the form of unusual DX, a renewed friendship over the air, a chance to render message service in some special case, or a sudden communication emergency in which one may play a part.

Special activities are sponsored by the American Radio Relay League, adding to ham interest and fraternalism at the same time opportunity is given for testing station performance over definite periods, making new friendships and QSOs, and developing operating technique.

Contest activities are diversified as greatly as possible to appeal to every classification of amateur interest showing a desire to participate. The most well known of all are the annual Sweepstakes, and the Field Day, appealing to all groups.

The annual Navy Day Receiving Competition is managed by the ARRL in late October, an opportunity for any receiving ham to check his copying ability and proficiency by getting the telegraphic dispatches sent from NAA and NPG to amateurs on the occasion of Navy Day, October 27th. An "honor roll" in *QST* and letters of commendation follow this event.

One of the very biggest events of the year is the annual Sweepstakes Contest which has potentialities of operating fun and new QSOs for everybody, the operation extending to all bands. Each November the rules for this are announced. A large number of contacts, new stations, new Sections and other operating records are always reported in and after the "SS" and the spirit of fraternalism prevails. The magic key to open the door to QSOs, new and old, during the Sweepstakes is a CQ SS, sent in a snappy manner, by any ham, anywhere in the 71 ARRL Sections.

Of major importance in the League's operating program, is the annual ARRL Field Day held on a week-end in June, combining the out-of-door opportunities with the Field testing of portables. As in all our operating, the idea of having a good time is combined with the more serious thought of preparing ourselves to shoulder the communication load as emergencies turn up and the occasion requires. A premium is placed on the use of low or medium power, on portability, and on the use of equipment without connection to commercial sources of power supply. Clubs as well as individuals have a major part in this.

• GENERAL PRACTICES

The signal "V" is used for testing. When one station has trouble in receiving, the operator asks the transmitting station to "QSV" while he tries to adjust his receiving set for better reception. A decimal point is often sent by the letter "R." Example: 2:30 PM is sent "2R30PM." A long dash for "zero" and the Morse C (.. .) for "clear" are in common use. Figures are best spelled out in texts, for highest accuracy. An operator who misses directions for a repeat will send "4," meaning, "Please start me, where?" NFT for "no filing time" is common.

The law concerning superfluous signals should be noted carefully by every amateur. Do not hold the key down for long periods of time when testing or thinking of something to send. If you must test, disconnect the antenna system and use an equivalent "dummy" antenna (made of lumped resistance, capacity and inductance). Send your call frequently when operating with the antenna. Pick a time for adjusting the station apparatus when few stations will be bothered.

Long calls after communication has been established are unnecessary and inexcusable. The up-to-date amateur station uses a "break-in" system of operation and just one switch controlling the power supply to the transmitter. The best sending speed is a medium speed with the letters quickly formed and sent evenly with proper spacing. The standard type telegraph key is best for all-round use. Before any freak keys are used a few months should be spent listening-in and practicing with a buzzer. Regular daily practice periods, two or three half hour periods a day, are best to acquire real familiarity and proficiency with code.

No excuse can be made for a "garbled" text. Operators should copy what is sent and refuse to acknowledge messages until every word has been received correctly. *Good operators never guess.* "Swing" in a fist is *not* the mark of a good operator, is undesirable. Unusual words are sent twice, the word repeated following transmission of "?". If not *sure*, good operators systematically ask for fills or repeats.

Don't say, "QRM" or "QRN" when you mean "QRS."

Don't acknowledge any message until you have received it completely.

Don't CQ unless there is definite reason for so doing. When sending CQ, use judgment. Sign your call frequently, interspersed with calls, and at the end of all transmissions.

Abbreviated standard procedure deserves a word in the interest of brevity on the air. Abbreviated practices help to cut down unnecessary transmission. However, make it a rule not to abbreviate unnecessarily when working an operator of unknown experience.

NIL is shorter than *QRU CU NEXT SKED.* Instead of using the completely spelled out preamble *HR MSG NR 287 W1GME CK 18 MIDDLEBURY CONN OCTOBER 28 TO*, etc., transmission can be saved by using *287 W1GME 18 MIDDLEBURY CT OCT 28 TO*, etc. One more thing that conserves operating time is the cultivation of the operating practice of writing down "287 W1UE 615P 11/13/37" with the free hand during the sending of the next message.

"Handling" a message always includes the transmission and receipt of radio acknowledgment (QSL) of same, and entry of date, time and station call *on the traffic*, as handled, for purposes of record.

• PROCEDURE FOR VOICE WORK

Most broadcasting work is casual and merely one-way communication while amateur radio and point-to-point services such as the


The American Radio Relay League, Inc.

West Hartford, Connecticut, U. S. A.

Certificate of Proficiency in Reception of the Continental Code

By this certificate and any appended endorsements to show additional qualifications, the Communications Department of the American Radio Relay League expresses its recognition of merit and progress in code proficiency on the part of

JOHN DOENAGLE, W1ZYX

who has this date demonstrated skill in the basic set of the true amateur, reception by ear of the International Morse or Continental Code. One examination of copy submitted as his work in copying by ear indicates absolute accuracy in his performance at a speed of 15 words per minute for a period of at least one minute of plain-language automatic tape-sent text averaging five characters to the word, which we hereby certify. Date of the A.R.R.L. transmission from W1AW, August 5, 1940

70 WPM 25 WPM 30 WPM 35 WPM

One of these Proficiency Certificates may be awarded to *you*. Try for it, by copying W1AW at 1:30 and 9:45 P.M. EST on dates announced in *QST* for monthly official qualifying runs. If you can do 15, 20, 25, 30 or 35 w.p.m. your certificate will so state! Every FCC amateur licensee is eligible.

The material is sent simultaneously on 1761, 3575, 7150, 14,254, 28,510, and 58,968 kc. from W1AW. There are *practice* runs starting at 9:45 P.M. EST daily, except Friday, from W1AW.

airways require the specific attention of the listener, and receipting for all transmissions. The International Telecommunications Convention and the supplementary regulations thereto prescribe method and system for time saving and maximum understandability. The most effective amateur voice operation conforms closely, where *accuracy* is the required objective, and examples of such procedure in accordance with the universal practice will be given. The general practices of radio extend to voice and telegraph alike and may be followed with the special voice procedure mentioned.

At the start of communication the calling formula is spoken twice by both the station called and the calling station. After contact is established it is spoken once only. Examples:

W5QL calls: "Hello W3JZ Philadelphia, hello W3JZ Philadelphia, W5QL Oklahoma City calling, W5QL Oklahoma City calling, message for you, message for you, come in please."

W3JZ replies: "Hello W5QL Oklahoma City, hello W5QL Oklahoma City, W3JZ Philadelphia answering, W3JZ Philadelphia answering, send your message, send your message, come in please."

W5QL replies: "Hello W3JZ Philadelphia, W5QL Oklahoma City answering, the message begins, from Oklahoma City Oklahoma W5QL number ..... [usual preamble, address, text, signature, etc.], message ends; I repeat, the message begins, from Oklahoma City Oklahoma W5QL number ..... [repetition of preamble, address, text, signature, etc.], message ends, come in please."

W3JZ replies: "Hello W5QL Oklahoma City, W3JZ Philadelphia answering, your message begins, from Oklahoma City Oklahoma W5QL number ..... [repetition of complete message], end of your message, come in please."

W5QL replies: "Hello W3JZ Philadelphia, W5QL Oklahoma City answering, you have the message correctly, you have the message correctly, W5QL Oklahoma City signing with W3JZ."

Note that in handling traffic by voice, messages are repeated *twice* for accuracy, using the word list to spell names and prevent misunderstandings. The receiving station must repeat the message back *in addition*. Only when the sender *confirms* the repetition as correct can the message be regarded as handled.

• WORD LIST FOR ACCURATE TRANSMISSION

When sending *messages* containing radio calls or initials likely to be confused and where errors must be avoided, the calls or initials should be thrown into short code words:

A — ABLE	J — JIG	S — SAIL
B — BOY	K — KING	T — TARE
C — CAST	L — LOVE	U — UNIT
D — DOG	M — MIKE	V — VICE
E — EASY	N — NAN	W — WATCH
F — FOX	O — OBOE	X — X-RAY
G — GEORGE	P — PUP	Y — YOKE
H — HAVE	Q — QUACK	Z — ZED
I — ITEM	R — ROT	

Example: *W1BCG* is sent as *WATCH ONE BOY CAST GEORGE.*

A somewhat different list can be obtained from the local Western Union telegraph office and posted beside the telephone to use when telephoning messages containing initials and difficult words. Such code words prevent errors due to phonetic similarity. Here is the Western Union word-list:

A — ADAMS	J — JOHN	S — SUGAR
B — BOSTON	K — KING	T — THOMAS
C — CHICAGO	L — LINCOLN	U — UNION
D — DENVER	M — MARY	V — VICTOR
E — EDWARD	N — NEW YORK	W — WILLIAM
F — FRANK	O — OCEAN	X — X-RAY
G — GEORGE	P — PETER	Y — YOUNG
H — HENRY	Q — QUEEN	Z — ZERO
I — IDA	R — ROBERT	

Names of states and countries are often used for identifying letters in amateur radiotelephone work, the possible objection being the confusion of the names of places with the station's location. It is recommended by ARRL that use of special abbreviations such as Q code be minimized insofar as possible in voice work, and that full expression (with conciseness) be substituted. OPS have adopted the Western Union word list as ARRL practice for avoiding difficulty with phonetic similarity. All word lists should be used in moderation, as necessary in avoiding misunderstanding, and at the end of calls not more than once.

• USING A BREAK-IN SYSTEM

If you aim to have the best, and every ham does, you will have break-in, whether of the push-to-talk or open the key variety, but if you haven't the ideal installation yet, by all means

AMATEUR RADIO STATION LOG

Input power to last stage, 135 watts — If operating as a portable or portable-mobile
Frequency, 3755 K.C.S. — Approximate location,
Type of emission, A1 — Type of vehicle or mobile unit in which installed,

DATE TIME	STATION CALLED	CALLED BY	STATION HEARD OR WORKED R	S	T	IF QSO RESULTED: MY SIGS R	S	T	TIME OF ENDING QSO	REMARKS, QTH, CHANGES FROM PREVIOUSLY RECORDED DATA, ETC.	QSL
9-2-36 5:45PM	W6TM	X	5	6	9½	5	5	9	6:03PM	Nice op.!	RR
6:08	VE5EP	X	5	7	9					No soap.	
6:14	W9ILH	W7NH								Hi! How those Ybs can chew!	
6:37	W9ESA	X	4	6	7½	5	6	8	7:12	Denver, Colo.	SS ✓
7:20	CQ	X									
7:22	X	W8DPE	3	4	9	3	3	9	7:33	Too early for 8's-sig weak.	✓
7:45	off for evening										
9-3-36 8:15 AM	W7APS	X							7:30AM	Sked	SR
7:31	X	W6KGO							7:53	Chewed about AARS	
8:07	CQ	X									
8:25	W9FLG	X	5	8	9	5	7	9½	8:38	W9DEB at Key there	✓
8:40	CQ	W5DXA	5	9	9½					Swell sig!!	
6:10PM	CQ	X									
6:13	X	VE4CM	5	7	9				6:24PM	Trunk Line Station	SS
6:32	W6GXM	X							6:59	Los Angeles	
7:00	QRT										

KEEP AN ACCURATE AND COMPLETE STATION LOG AT ALL TIMES! THE F.C.C. REQUIRES IT

The official ARRL log is shown above, answering every government requirement in respect to station records. Bound logs made up in accord with the above form can be obtained from Headquarters for a nominal sum or you can prepare your own, in which case we offer this form as a suggestion, hoping that you find it worthy of adoption. Every station must keep some sort of a log. The above log has a special wire binding and lies perfectly flat on the table.

operate intelligently and take every advantage of the other fellow's facilities when break-in is offered! Break-in avoids unnecessarily long calls, prevents QRM, gives you more communication per hour of operating. Brief calls with frequent short pauses for reply can approach (but not equal) break-in efficiency.

A separate receiving antenna makes it possible to listen to most stations while the transmitting tubes are lighted. It is only necessary with break-in to pause just a moment occasionally when the key is up (or to cut the carrier momentarily and pause in a 'phone conversation) to listen for the other station. The click when the carrier is cut off is as effective as the word "break."

For *'phone* a push button to put the carrier on the air only while talking is a completely practical device, and amateur 'phone operators would do well to emulate the push-to-talk efficiency of the airways operators to improve conditions in the 'phone bands.

C.w. *telegraph* break-in is usually simple to arrange. With break-in, ideas and messages to be transmitted can be pulled right through the holes in the QRM. Snappy, effective, efficient, enjoyable amateur work really requires but a simple switching arrangement in your station to cut off the power and switch 'phones from monitor to receiver. If trouble occurs the sending station can "stand by" (QRX), or it can take traffic until the reception conditions at the distant point are again good.

In calling, the transmitting operator sends the letters "BK," "BK IN," or "BK ME" at frequent intervals during his call so that stations hearing the call may know that a break-in is in use and take advantage of the fact. *He pauses at intervals* during his call, to listen for a moment for a reply from the station being called. If the station being called does not answer, the call can be continued. If the station called answers someone else, he will be heard and the calling can be broken off. With *full* break-in, transmitter may be remotely controlled so no receiver switching is necessary. A tap of the key, and the man on the receiving end can interrupt (if a word is missed) since the receiver is monitoring, awaiting just such directions constantly. But it is not necessary that *you* have such complete perfect facilities to take advantage of break-in when the stations you work are break-in equipped. It is not intelligent handling of a station or coöperation with an operator advertising that he has "bk in" with his calls, to sit idly by minute after minute of a properly sent call. After the first invitation to break is given and at each subsequent pause turn on your transmitter and tap your key — and you will find that conversation or business can start immediately.

• KEEPING A LOG

The FCC requires every amateur to keep a complete station operating record. It may also contain records of experimental tests and adjustment data. A stenographer's notebook can be ruled with vertical lines in any form to suit the user. The Federal Communications Commission requirements are that a log be maintained which shows (1) the date and time of *each* transmission, (2) *all calls* and transmissions made (whether two way contacts resulted or not), (3) the input power to the last stage of the transmitter, (4) the frequency band used, (5) the time of *ending* each QSO and the operator's identifying signature for responsibility for each session of operating. Messages may be written in the log or separate records kept — but record must be made for one year as required by the FCC. For the convenience of amateurs ARRL stocks both log books and message blanks, and if one uses the official log he is sure to fully comply with the government requirements if the precautions and suggestions included in the log are followed.

• R-S-T SYSTEM OF SIGNAL REPORTS

The R-S-T system is an abbreviated method of indicating the main characteristics of a re-

READABILITY

1 — Unreadable
2 — Barely readable, occasional words distinguishable
3 — Readable with considerable difficulty
4 — Readable with practically no difficulty
5 — Perfectly readable

SIGNAL STRENGTH

1 — Faint — signals barely perceptible
2 — Very weak signals
3 — Weak signals
4 — Fair signals
5 — Fairly good signals
6 — Good signals
7 — Moderately strong signals
8 — Strong signals
9 — Extremely strong signals

TONE

1 — Extremely rough hissing note
2 — Very rough a.c. note, no trace of musicality
3 — Rough, low-pitched a.c. note, slightly musical
4 — Rather rough a.c. note, moderately musical
5 — Musically modulated note
6 — Modulated note, slight trace of whistle
7 — Near d.c. note, smooth ripple
8 — Good d.c. note, just a trace of ripple
9 — Purest d.c. note

(If the note appears to be crystal controlled simply add an X after the appropriate number.)

ceived signal, the Readability, Signal Strength, and Tone. The letters R-S-T determine the order of sending the report. In asking for this form of report, one transmits RST? or simply QRK?

Such a signal report as "RST 387X" (abbreviated to 387X) will be interpreted as "Your signals are readable with considerable difficulty; good signals (strength); near d.c. note, smooth ripple; crystal characteristic noticed." Unless it is desired to comment in regard to a crystal characteristic of the signal, *a single three-numerical group will constitute a complete report* on an amateur signal. The R-S-T system is the standard ARRL method of reporting. Various report combinations are based on the table.

• EMERGENCY OPERATING PRECAUTIONS[1]

In emergency operating a fine sense of discrimination is necessary. Desire to help through *transmitting* participation is often a dangerous thing. Careful listening locates stations, places, nets, keeps general calls at minimum and enables handling traffic efficiently responsive to the CQ of an emergency area station. "Talking it over" and general chatter should be *reserved* until emergency conditions no longer exist.

As soon as the FCC has "declared" a condition of general communications emergency, special amateur regulations (Sec. 152.54) govern absolutely, with the following provisions effective until the Commission declares the emergency ended:

1. No transmissions in the 80- or 160-meter bands may be made *except* those relating to the relief or emergency service. Casual conversation, incidental calling or testing, remarks not pertinent to the constructive handling of the emergency communications, shall be prohibited.

2. 25-kc. band-edge segments shall be reserved at all times for (a) emergency calling channels, (b) initial calls from the isolated, (c) first calls initiating dispatch of important priority relief matters. All stations shall, for general communication, shift to other within-band frequencies for carrying on communication. The channels for calling ONLY, in emergencies, are: 2025–2050, 3500–3525 and 3975–4000 kcs.

3. Hourly observance of mandatory quiet or listening periods, the first five minutes of each hour. (No calls may be answered in this period. Only "utmost priority" traffic may continue.)

4. For promulgating the emergency-declaration, for policing-warning-observing work in 1750–2050 and 3500–4000 kc. bands, FCC may designate certain amateur stations. Announcements from these stations will be identified by their reference to Sec. 12.155 by number, and their specification of the date of the FCC's declaration, with statement of the area and nature of the emergency.

Where a communications emergency is part of a general emergency accompanied by relief problems and movements of the population it will be found that many refugees are created by the situation and deliveries of ingoing messages to these people are well nigh impossible. There is great good will as a result of handling personal safety messages in each instance where delivery can be effected, but it must be remembered that relief problems of the community at large, official messages from Red Cross, military and civic officials have *absolute priority*. Radio circuits must carry the important messages first, and when personal safety messages are permissible in the judgment of operators in the affected area it is even then much more profitable to have the burden of traffic outgoing messages of safety rather than requests for investigating safety which cannot be acted upon except at a deferred date. Organization must avoid unnecessary duplication of channels, must load telegraph circuits properly to avoid congesting telephone channels where fewer circuits are available. Messages should be routed for point to point delivery by a single channel, and no irritating duplications or repeating of the same messages (broadcast) be permitted where this can be avoided. The function of broadcasting stations is to reach the public, that of amateur stations to handle point to point information efficiently with as little public excitement as possible and maximum secrecy for texts of official messages and any information that might start rumors.

It is important that originating stations *number* their messages and *put them in standard form*. That makes the work systematic and respected and takes it out of the hit or miss classification into which casual exchanges fall in the minds of recipients. Such method in all amateur work instantly nails duplicate messages, makes tracing possible, and makes amateur performance comparable with that of other communication services.

Unauthorized broadcasting and modifying of broadcasts addressed to the amateur service has caused difficulty in major emergencies of recent years. Rumors are started by unintelligent expansion or contraction (and subsequent repetitions) of broadcast dispatches. It is improper and deserving of censure and severe penalties to delete essential limiting words that qualify a message, to expand, exaggerate, or alter meanings. Broadcasts should include their source and authority; they should be repeated exactly if at all, or not repeated; League and FCC transmissions through vigilante appointees in emergencies of the future will as in the past extend no authority, or specified limited authority, to rebroadcast.

The League's Emergency Corps has adopted the principles tabulated for "before — in — after emergencies" and in addition is pledged to a man to observe the following:

. . to confirm the authenticity of reports, and as a responsible individual avoid publication or transmission of

any rumor, except labelled as such. (Vital information should be released only when verified by proper authority. Make your operation in connection with official agencies such as the Red Cross, civil and military authorities so that messages may be signed by *officials* in as many cases as possible.)

. . . . to work closely with any ARRL (city or regional) Emergency Coördinator that may be appointed. Also to coöperate with Section Communications Manager, Route Manager, or Phone Activities Manager in any definite steps for emergency organization.

. . . . to have proper regard to priority of communications. To keep quiet (QRX) as much as possible to reduce interference. Priority is normally determined within the emergency zone itself.

. . . . to become acquainted with the special frequencies and facilities of organized amateur groups, the AARS and USNR.

. . . . to use QRR *only* if necessary, and then use it correctly. (It may ONLY be used by a station in an emergency zone with an actual distress message.)

A.R.R.L. — AMERICAN RED CROSS UNDERSTANDING

The purpose of this understanding between the American Red Cross and the American Radio Relay League is to secure maximum coöperation in time of disaster. The Board of Directors of the American Radio Relay League at its meeting June 1, 1940, considered the relationships of the American amateur radio fraternity with the American Red Cross in time of disasters involving disruption of communication.

The American Radio Relay League recognizes the American Red Cross as the agency chartered by Congress to represent the American people in carrying on disaster relief and therefore as the primary agency.

The American Red Cross recognizes that the amateur radio service, because of its excellent geographical station coverage, and especially the available stations possessing emergency power supply, can render valuable aid in reëstablishing communication when other facilities have been disrupted.

The American Red Cross welcomes the coöperation of the American Radio Relay League with local Red Cross chapters to extend radio planning into chapter jurisdictions and to correlate amateur radio operations to assure the best possible communications by such facilities. This coöperation with American Red Cross chapters may be furthered by individual chapters' designation of an American Radio Relay League Emergency Coördinator to serve as a member of the Red Cross Chapter Sub-Committee on Transportation and Communication as recommended in the Chapter Disaster Preparedness & Relief Manual, ARC 209.

• EMERGENCY COMMUNICATION[1]

A communications emergency occurs whenever normal facilities are interrupted or overloaded, and may or may not involve general public participation. A communications emergency need not involve a public relief or welfare emergency, but the latter condition usually is accompanied by a communications emergency.

In scores of emergencies radio amateurs have given a good account of themselves. Radio has proved the only agency to span the gap with power failing and wires down. Since our amateur stations are of the most numerous class licensed, because they are located anywhere and everywhere, many are located strategically to give an account of them-

BEFORE EMERGENCIES

Be ready, with emergency power supply. Six-volt tubes in exciters and receivers make for convertibility and utility in portable work where gas engine generators are not available. Overhaul and test periodically.

Test set operator ability in ARRL Field Day and Contests. Give local officials and agencies your address; explain amateur facilities; act via the ARRL Emergency Coördinator wherever one is appointed.

IN EMERGENCY

REPORT at once to the ARRL Emergency Coördinator so he will have full data on availability of stations — operators — circuits. Work direct with agencies we serve where no appointed official is in charge, and when so assigned.

CHECK station operating facilities; offer services to all who may use them, via Coördinator or helping official where one is available.

QRR is the official ARRL "land SOS," a distress call for emergency uses *only* . . . for use *only* by station asking assistance.

RESTRICT all work in accord with FCC regulations,[2] Sec. 12.155, as soon as FCC has "declared" a state of communications emergency.

THE KEY STATION in emergency zone is the first and the supreme authority for priority and traffic routing in the early stages of emergency relief communications.

PRIORITY must be given messages in the general public interest (relief plans, re food, medicine, necessities). Press reports and personal assurance messages can then be handled if practicable.

COÖPERATION is required of all amateurs with those we serve; with other communication agencies. Don't clutter air with CQs. The *majority* of amateurs must *listen in;* QRX, avoid QRMing. Be ready to help; operate as intelligently as possible; coöperate by staying off the air while vital information and relief measures are handled, if stations able to help as well as yours are on the job. (CQ STORM AREA is nothing but "more QRM.")

AFTER EMERGENCIES

REPORT to ARRL as soon as possible and as fully as possible so amateur radio can receive full credit. Amateur radio communication in 52 major disasters since 1919 has won glowing public tribute. Maintain this record.

selves as need arises. Those amateurs best *prepared* before trouble comes are credited with having played most important parts. It should be a matter of pride with every amateur to fit himself as a superlative *operator*, and equip himself with apparatus with an eye to emergencies when power may evaporate from customary commercial sources with a view to carrying on the vital service of amateur communication if urgent opportunity for a service large or small arrives.

We serve *best* by manning a few powerful, best situated stations with amateur operators in 8-hour shifts, rather than inadequately manning too many amateur stations with overworked operators creating band congestion.

Those we serve in widespread emergency are the Red Cross, civil and military authorities, transportation agencies, power-gas-light-water utilities, the Coast Guard, Army engineers and others. In doing this we often work hand in hand with other wire and radio services as well as with each other.

In the event of new cases of serious and widespread communications emergency, it is likely that the FCC will follow precedent (and its regulations, Sec. 12.155) and again declare a general communications emergency. Then, as in the Ohio valley flood (1937) it is likely that FCC will call on your ARRL to recommend policing-observing stations for FCC to appoint in the different amateur bands to function for the duration of the emergency. ARRL stands ready with its experience, its program of preparedness, and its member-station organization in which every live amateur who volunteers has a part.

• MONITORED FREQUENCIES

A few words on the last two points: In dire disaster where life and property are threatened and a region is isolated except for wireless communication, government aid may be secured when all attempts on normal channels have failed, by "breaking" an existing government circuit. AARS use 6990-, 3497.5-, etc., kcs. Naval shore stations guard certain frequencies constantly, also. In the east 4040-4075, 4235- and 8920- kc. at night, or 7995 kc. in daylight hours, and in the west 4010-, 4235-, 4525- and 7995- kc. are the night, with 8150 kc. a day frequency.

• EMERGENCY CALLING FREQUENCIES

Regarding QRR, which call is limited to use of isolated stations for first emergency calls, special provision and methods are necessary to assist the stations under handicap of no commercial power in remote sections in getting contact and help. Their problem is vital, and different from the problem of casual participation by the amateur community at large.

It is recommended by ARRL that frequencies *at the band edges* be utilized for emergency calls, with no general emergency declared or in effect. This lends point and specification to builders of emergency equipment. This spot on all bands is well covered continuously by receivers. It gives hope to the isolated operator that he be heard. At such frequencies all listeners are instructed to hunt for weak signals in any periods in general emergency established for taking account of the isolated, and establishing new important connections.

The FCC regulations [2] now *require* that in general emergency 2050–2025 kc., 4000–3975 kc. and 3500–3525 kc. shall be reserved as *emergency calling channels* — prohibited to all stations except for first emergency or QRR calls, and initial or important emergency relief traffic or arrangements, *whenever FCC shall have recognized and declared a general communications emergency exists.* All stations using such channels shall as rapidly as practicable shift to normal working and calling frequencies, to leave these emergency channels clear for important calls of this type.

The Federal Communications Commission rules also require that in emergency, all amateur stations in the designated areas observe a silent or listening period for the *first five minutes of each hour* (0000–0005), *on all amateur channels* (3500–4000 kc., 1750–2000 kc.), tuning through the emergency calling channels *and other channels* for any QRR or initial-important calls from weak stations, previously unheard in interference.

The League requests the fullest collaboration [3] and coöperation of all amateurs to add to our public service record. *Preparedness* of station and operator is the first step. Voluntary enlistment of every amateur is requested (1) in abiding by the precepts above outlined (2) in registering in the ARRL Emergency Corps (3) in coöperation for local community and regional planning and tests, which will be initiated by appointed coördinators and other League Officials (4) in building self-powered equipment.

After emergency (large or small) full individual reports to the ARRL Communications Department are requested for the amateur service record. The part that every amateur played must be recorded not only for the *QST* account, but to strengthen and support the running record of amateur achievement.

From analysis of all reports ARRL Public Service Certificates are awarded for notable "public service" work.

Stations outside an "emergency zone" in communication with relief stations in that zone are requested to inform ARRL Headquarters at once of this situation by telegram to facilitate traffic movement and for the information of the press.

• MESSAGE HANDLING

Amateur traffic handling is highly developed and effective, *if one knows how to use it.* Don't expect that you can get on the air with the message you have written and give it to the first station that comes along and expect miracles to happen. You fellows who get your fun principally from DX, rag chewing, and building equipment should appreciate that you must place the occasional message *you* start and wish to have reach its destination, not in the hands of others like yourselves, but in the hands of one of the many operators who *specialize* in keeping schedules and handling messages, one who gets his fun mainly out of this branch of our hobby, who knows the best current routes and is in a position to use them.

Station owners may originate traffic going to any part of the United States, Hawaii, Porto Rico, Alaska, or the Philippines.

Messages should be put in as complete form as possible before transmitting them. *Incomplete messages should not be accepted.* As messages are often relayed through several stations before arriving at their destination, *no abbreviations should be used in the text* as mistakes are bound to happen when the text is shortened in this manner. To people not acquainted with radio abbreviations, messages written in shortened form are meaningless. Delivering stations must be careful to see that messages are written out fully.

In handling messages we are doing something really worth while. We want to start only good worth-while messages from our stations. Our efforts should be directed to making the quality of our message service high. The number of messages we handle is of secondary importance. The *kind of messages* we originate or start from our stations and the *speed* with which the messages pass through our station and the *reliability or accuracy* with which the messages are handled are the things of paramount importance.

Just as the ultimate aim of amateur radio on all frequency bands is *communication*, so is the relaying of word by radiogram a "natural" when one has something to say to a party beyond immediate reach. Not all hams perhaps appreciate the utility that results from using amateur message service in our ham correspondence. However, no ham, not even a new member of the brotherhood, but feels the satisfaction of having really accomplished something tangible in exchanging a message (recorded communication) with another amateur. Of course not all beginners develop the advanced operating technique of the finished message handler, but it is within the reach of all who will try.

The amateur who handles traffic is automatically training himself to do the kind of a job official agencies desire in emergencies, and he becomes a valuable exponent of the whole amateur service.

Special Orders No. 73 and 73A, adopted by the FCC in connection with national defense requirements prohibit general portable work with the following exceptions: (1) Work by stations of amateurs supplying or attempting to supply communication in the public interest, in a bona fide domestic communications emergency, is permitted. (2) Operation "above 56,000 kc." is unrestricted, seven days per week. (3) Provided notice of proposed operation has been filed with the proper FCC office *48 hours in advance*, the testing of self-powered portables and portable mobile emergency equipment *in daylight hours on Saturdays and Sundays*, is permitted.

• MESSAGE FORM

Each message originated and handled should contain the following component parts in the order given:

(a) Number
(b) Station of Origin
(c) Check
(d) Place of Origin
(e) Time Filed
(f) Date
(g) Address
(h) Text
(i) Signature

A standard form enables one to know just what is coming next, and makes accuracy possible with speed. Start some messages to familiarize yourself with the proper way to write and send traffic in good form. Just as you would be ashamed to admit it if you could not qualify as an experienced amateur by at least "15 w.p.m." code capability, be equally proud of your basic knowledge of how to properly form and send record communications.

(a) Every message transmitted should bear a "number." On the first day of each calendar year, each transmitting station establishes a new series of numbers, beginning at No. 1. Keep a sheet with a consecutive list of numbers handy. File all messages without numbers. When you send the messages, assign numbers to them from the "number sheet," scratching off the numbers on that list as you do so, making a notation on the number sheet of the station to which the message was sent and the date. Such a system is convenient for reference to the number of messages originated each month.

(b) The "station of origin" refers to the call of the station at which the message was filed. This should always be included so that a "service" message may be sent back to the originating station if something interferes with the prompt handling or delivery of a message. In the example in "d" below, W1AW is the station of origin, that call being

the one assigned the station at the national headquarters of the League.

(c) Every word and numeral *in the text* of a message counts in the check. Full information on checking messages is given later in this chapter.

(d) The "place of origin" refers to the name of the city from which the message was started. If a message is filed at League Headquarters by someone in West Hartford, Conn., the preamble reads *Nr 457 W1AW ck 21 West Hartford Conn 8R57 p June 11, etc.*

If a message is sent to your radio station by mail the preamble shows the place of origin as the town where the message came from. If a message was filed at ARRL Headquarters and if it came by mail from Wiscasset, Maine, the preamble would run like this to avoid confusion: *Hr msg nr 457 W1AW ck 21 Wiscasset Maine 8R57 p June 11, etc.*

(e) The time filed is the time at which the message is received at the station for transmission. "NFT" in a preamble means no filing time.

(f) Every message shall bear a "date" and this date is transmitted by each station handling the message. The date is the "day filed" at the originating station unless otherwise specified by the sender.

(g) The "address" refers to the name, street and number, city, state, and telephone number of the party to whom the message is being sent. A *very complete address* should always be given to *insure* delivery. When accepting messages this point should be stressed. In transmitting the message the address is followed by a double dash or break sign (— ... —) and it always precedes the text.

(h) The "text" consists of the words in the body of the message. No abbreviations should ever be substituted for the words in the text of the message. The text follows the address and is set off from the signature by another break (— ... —).

(i) The "signature" is usually the name of the person sending the message. When no signature is given it is customary to include the words "no sig" at the end of the message to avoid confusion and misunderstanding. When there *is* a signature, it follows the break; *the abbreviation "sig" is not transmitted.*

The presence of unnecessary capital letters, periods, commas or other marks of punctuation may alter the meaning of a text. For this reason commercial communication companies use a shiftless typewriter (capitals only). The texts of messages are typed in block letters (all capitals) *devoid of punctuation*, underlining and paragraphing, *except where expressed in words.* In all communication work, accuracy is of first importance. Spell out figures and punctuation.

• NUMBERING MESSAGES

Use of a "number sheet" or consecutive list of numbers enables any operator to tell quickly just what number is "next." Numbers may be crossed off as the messages are filed for origination. Another method of use consists of filing messages in complete form *except for the number.* Then the list of numbers is consulted and numbers assigned as each message is sent. As the operator you work acknowledges (QSLs) each message cross off the number used and note the call of the station and the date opposite this number.

The original number supplied each message by the operator at the originating station is transmitted by each station handling the message. No new numbers are given the message by intermediate stations.

• CHECKING TRAFFIC—THE LAND LINE CHECK

The ARRL check is the land line or "text-only" count, consisting of the count of only the words in the body or text of the message. It is quicker and easier to count in this fashion than to use the cable count of words in address, text and signature check which is followed in marine operating work, this simplification being the reason for its adoption. When in the case of a few exceptions to the basic rule in land line checking, certain words in address, signature or preamble are counted, they are known as extra words, and all such are so designated in the check right after the total number of words.

• COUNTING WORDS IN MESSAGES

The check includes: (1) all words, figures and letters in the body, and (2) the following extra words:

(a) Signatures except the first, when there are more than one (a title with signature does not count extra; but an *address* following a signature does).

(b) Words "report delivery," or "rush" in the check.

(c) Alternative names and/or street addresses, and such extras as "personal" or "attention - - - - - - - - -."

Examples: "Mother, Father, James and Henry" is a family signature, no names counted extra. "John Brown, Second Lieutenant" or "Richard Johnson, Secretary Albany Auto Club" are each one signature with no words counted as extra. An official title or connection is part of one signature, not extra. "Technical Department, *Grammer, Mix and Goodman*" as a signature would count three extra words, those italicized after the first name counting as extras. The check of a message with ten words text and three such extras in the signature would be "CK 13 3 extra."

Dictionary words in most languages count as one word irrespective of length of the word. In counting figures, a group of five digits or less will count as *one word.* Bars of division and decimal points may constitute one or more of the digits in such a group. It is recommended that, where feasible, words be substituted for figures to reduce the possibility of error in transmission. Detailed examples of word counting are about as difficult in one system of count as another.

Count as words dictionary words taken from English, German, French, Spanish, Latin, Italian, Dutch and Portuguese languages; initial letters, surnames of persons, names of countries, cities and territorial subdivisions. Abbreviations as a rule should be used only in service messages. Complete spelling of words is one way to avoid error. Contractions such

as "don't" should be changed to "do not." Examples:

Emergency (English dictionary)	1 word
Nous arriverons dimanche (French dictionary)	3 words
DeWitt (surname)	1 word
E.L.B.D. (initials)	4 words
United States (country)	1 word
President Hoover (steamship)	1 word
Prince William Sound	3 words
M.S. City of Belgrade (motor ship)	2 words

EXCEPTIONS

A.M., P.M.	1 word
F.O.B. (or fob)	1 word
O.K.	1 word
Per cent (or percent)	1 word

The best practice is to spell out all such when it is desired to send them in messages. In ordinal numbers, affixes d, nd, rd, st, and th count as one word. Abbreviations of weights and measures in common use count as one word each. Examples:

10 000 000 (figures)	2 words
Ten millions (dictionary words)	2 words
5348 (figures)	1 word
67.98 (figures)	1 word
64A2	4 words
45¼ (figures and bar of division)	1 word
3rd (ordinal number and affix)	2 words
W1BDI	1 word

Groups of letters which are not dictionary words of one of the languages enumerated, or combinations of such words will count at the rate of five letters or fraction thereof to a word. In the case of combinations each dictionary word so combined will count as a word. In addition USS USCG, etc., written and sent as compact letter-groups count as one word. Examples:

Tyffa (artificial 5 letter group)	1 word
Adccol (artificial 6 letter group)	2 words
allright, alright (improperly combined)	2 words
Dothe (improperly combined)	2 words
ARRL	1 word

At the request of sender the words "report back delivery" asking for a service showing success or failure in delivering at the terminal station, may be inserted after the check of "rush" or "get answer" similarly, such words counting as extras in the group or check designation as just covered by example. "Phone" or "Don't Phone" or other sender's instructions in the address are not counted as extra words. In transmitting street addresses where the words east, west, north or south are part of the address, spell out the words in full. Suffixes "th," "nd," "st," etc., should not be transmitted. Example: Transmit "19 W 9th St" as "19 West 9 St." "F St NE" should be sent, "F St Northeast." When figures and a decimal point are to be transmitted, add the words CNT DOT in the check.

Isolated characters each count as one word. Words joined by a hyphen or apostrophe count as separate words. Such words are sent as two words, without the hyphen. A hyphen or apostrophe each counts as one word. However, they are seldom transmitted. Two quotation marks or parenthesis signs count as one word. Punctuation is *never* sent in radio messages except at the express command of the sender. *Even then it is spelled out.*

Here is an example of a plain language message in correct ARRL form carrying the land line check:

NR 601 W1AW CK 9 WEST HARTFORD CONN
1R15P OCT 28

ALL RADIO HAMS
9 COMPLETE ADR ST
ANYCITY USA

ALL AMATEURS ARE REQUESTED TO FOLLOW STANDARD ARRL FORM

HANDY ARRL CM

Message handling is one of the major things that lies in our power as amateurs to do to show our amateur radio in a respected light, rather than from a novelty standpoint. Regardless of experimental, QSL-collecting, friendly ragchews, and DX objectives, we doubt if the amateur exists who does not want to know how to phrase a message, how to put the preamble in order, how to communicate wisely and well when called upon to do so. Scarcely a month passes but what some of us in some section of our ARRL are called upon to add to the communication service record of the amateur.

It is important that deliveries be made in business-like fashion to give the best impression, and so that in each case a new friend and booster for amateur radio may be won. Messages should be typed or neatly copied, preferably on a standard blank, retaining original for the FCC station file where these are mailed. The designation and address of the delivering station should be plainly given so a reply can be made by the same route if desired.

For those who would disparage some message texts as unimportant, perhaps a reminder is in order that in the last analysis it is not the importance to the ham that handles it that counts, but the importance to the party that sends and the party that receives a message.

The individual handling of traffic in quantities small as well as large is to a very great extent the material that we amateurs use for developing our operating ability, for organizing our relay lines, for making ourselves such a very valuable asset to the public and our country in every communications emergency that comes along, not to mention the individual utility and service performed by each message passed in normal amateur communications.

For those "breaking-in" may we say that any ORS, Trunkliner or experienced ARRL traffic handler will be very pleased

to answer your questions and give additional pointers both in procedure and concerning your station set-up to help you make yours a really effective communications set-up. Since experience is the only real teacher we conclude by suggesting to all and sundry that becoming proficient in any branch of the game is partly just a matter of practice. Start a few messages, to get accustomed to the form. Check some messages to become familiar with the official ARRL (land line) check. You will find increased enjoyment in this side of amateur radio by adding to your ability to perform; by your familiarity with these things the chance of being able to serve your community or country in emergency will be greater. Credit will be reflected on amateur radio as a whole thereby.

• ORIGINATING TRAFFIC

Messages to other amateurs are a natural means of exchanging comment and maintaining friendships. The simplest additional way to get messages is to offer to send a few for friends, reminding them that the message service is free and no one can be held responsible for delay or non-delivery. Wide-awake amateurs have distributed message blanks to tourist camps. Lots of good traffic has been collected through a system of message-collection boxes placed in public buildings and hospitals. A neatly typed card should be displayed near-by explaining the workings of our ARRL traffic organization, and *listing the points to which the best possible service can be given.*

Messages that are not complete in every respect *should not be accepted* for relaying. *Complete address* on every message is important.

To properly represent amateur radio, placards when used should avoid any possible confusion with telegraph and cable services. Any posters should refer to AMATEUR RADIOGRAMS, and explain that messages are sent through AMATEUR RADIO STATIONS, as a HOBBY, FREE, without cost (since amateurs can't and will not accept compensation). The exact conditions of the service should be stated or explained as completely as possible, including the fact that there is NO GUARANTEE OF DELIVERY. The individual in charge of the station has full powers to refuse any traffic unsuitable for radio transmission, or addressed to points where deliveries cannot be made. Relaying is subject to radio conditions and favorable opportunity for contacting. Better service can be expected on 15-word texts *of apparent importance* than on extremely long messages. Traffic should *not* be accepted for "all over the world."

Careful planning and organized schedules are necessary if a *real* job of handling traffic is to be done. Advance schedules are essential to assist in the distribution of messages. It may be possible to schedule stations in cities to which you know quantities of messages will be filed. Distribute messages, in the proper directions, widely enough so that a few outside stations do not become seriously overburdened. Operators must route traffic properly — not merely aim to "clear the hook."

It is better to handle a small or moderate volume of traffic *well* than to attempt to break records in a manner that results in delayed messages, non-deliveries, and the like which certainly cannot help in creating any public good-will for amateur radio.

Whatever type of exhibit is planned, write ARRL in advance, in order to receive sample material to make your amateur booth more complete.

• RELAY PROCEDURE

Messages shall be relayed to the station nearest the location of the addressee and over the greatest distance permitting reliable communication.

No abbreviations shall be substituted for the words in the text of a message with the exception of "service messages," to be explained. Delivering stations must be careful that no confusing abbreviations are written into delivered messages.

Sending "words twice" is a practice to avoid. Use it only when expressly called for by the receiving operator when receiving conditions are poor.

Messages shall be transmitted as many as three times at the request of the receiving operator. Failing to make a complete copy after three attempts, the receiving operator shall cancel the message (QTA).

Agreement to handle (relay or deliver) a message properly and promptly is always tacitly implied in accepting traffic. When temporarily *not* in a position to so handle, it is a service to amateur radio and your fellow ham to courteously *refuse* a message.

An operator with California traffic does not hear any western stations so he decides to give a directional "CQ" as per ARRL practice. He calls, *CQ, CALIF CQ CALIF DE W1INF W1INF W1INF*, repeating the combination three times.

He listens and hears W9CXX in Cedar Rapids calling him, *W1INF W1INF W1INF DE W9CXX W9CXX W9CXX AR.*

Then he answers W9CXX indicating that he wishes him to take the message. W1INF says *W9CXX W9CXX DE W1INF R QSP MILL VALLEY CALIF NEAR SF? K.*

After W9CXX has given him the signal to go ahead, the message is transmitted, thus:

HR MSG NR 78 W1INF CK15 WEST HARTFORD CONN NFT (for "no filing time") NOV 18

ALAN D WHITTAKER JR W6SG
79 ELINOR AVE
MILL VALLEY CALIF

SUGGEST YOU USE ARRL TRUNK LINE K THROUGH W5NW TO HANDLE PROPOSED VOLUME TRAFFIC REGARDS

BUBB W1JTD

W9CXX acknowledges the message like this: *W1INF DE W9CXX NR 78 R. K.* Not a single *R* should be sent unless the whole message has been correctly received.

Full handling data is placed on the message for permanent record at W1INF. The operator at W9CXX has now taken full responsibility for doing his best in forwarding the message.

• FIXED TEXT MESSAGES—ARL CHECK

To start a fixed text message, the originator must select one of the texts from a list. The amateur starting the message sends the *number* corresponding to that particular text instead of the text. The letters ARL (short for American-Radio-Relay-League-numbered-text-to-follow) must be placed before the figures of the check to show that the text is from our particular numbered text list. "ARL" identifies this at once as a message that has to be expanded for delivery or relaying to a station that has no list (to have complete understanding and avoid error). In radio handling the number must always be spelled out, for accuracy.

The new list of "ARRL Numbered Radiograms" is in the possession of every member of the League's Emergency Corps, and every ORS, OPS, and field organization official. The list of fixed texts was prepared mainly with possible emergency needs and utility in mind; it is a special tool for special occasions. It may be used *only* when stations at each end of a QSO are equipped with exactly similar lists. Extra precautions to insure accuracy are necessary when using a number for a text; every message delivered or relayed to a station not having a list must be completely expanded.

The new list of sixty texts will be sent free of charge to anyone requesting it by sending a radiogram asking for it. We want the list to be available to anyone active in amateur traffic handling or likely to have a use for it. We shall continue to recommend the use of *individually worded messages* instead of any stereotyped form in every case possible. Use "numbered texts" with caution, only with other operators with experience and similar lists. But all stations might well keep a copy of the new list ready *in the station log.*

Example: NR1 W1AW CK ARL1 Newington Conn March 2 (Address) BT THREE BT John AR

"ARL?" can be readily understood to mean, "Do you have the list of ARRL-Numbered Radiograms, and are you ready for such a message," "ARL" (reply) then means, "I have the ARRL-Numbered Radiogram list. I am ready for such a message."

A list of the texts applicable to possible relief-emergency uses follows:

ONE	All safe. Do not be concerned about disaster reports.
TWO	Coming home as soon as possible.
THREE	Am perfectly all right. Don't worry.
FOUR	Everyone safe here. Only slight property damage.
FIVE	All well here. Love to folks.
SIX	Everyone safe, writing soon.
*SEVEN	Reply by amateur radio.
EIGHT	All safe, writing soon, love.
NINE	Come home at once.
TEN	Will be home as soon as conditions permit.
ELEVEN	Cannot get home. Am perfectly all right. Will be home as soon as conditions permit.
*TWELVE	Are you safe? Anxious to hear from you.
*THIRTEEN	Is ..... safe? Anxious to hear.
*FOURTEEN	Anxious to know if everything is OK. Please advise.
*FIFTEEN	Advise at once if you need help.
*SIXTEEN	Please advise your condition.
*SEVENTEEN	Kindly get in touch with us.
*EIGHTEEN	Please contact me as soon as possible (at .....).

None of these numbered-text messages should be handled in the *first stages* of any general emergency. Those marked above with an asterisk (*) should never be *solicited* during an emergency, since experience shows that such inquiry traffic going into an emergency area ordinarily cannot be delivered while the emergency still exists. Concentration must be on traffic going out of an emergency area.

Never forget to put "ARL" in the check — or the delivering station will deliver a "number" instead of the words it stands for. From the table we see that the text in the example must be completely written out as AM PERFECTLY ALL RIGHT. DON'T WORRY. when it is delivered, or transmitted to any station without a list, or that cannot make affirmative response to "ARL?"

• GETTING FILLS

If the first part of a message is received but substantially all of the latter portions lost, the request for the missing parts is simply *RPT TXT AND SIG*, meaning "Repeat text and signature." *PBL* and *ADR* may be used similarly for the preamble and address of a message. *RPT AL* or *RPT MSG* should not be sent unless nearly all of the message is lost.

Each abbreviation used after a question mark (..——..) asks for a repetition of that particular part of a message.

When a few word-groups in conversation or message handling have been missed, a selection of one or more of the following abbreviations will enable you to ask for a repeat on the parts in doubt. 'Phone stations of course request fills by using the full wording specified, without attempt at abbreviation.

Abbreviation	*Meaning*
?AA	Repeat all after
?AB	Repeat all before
?AL	Repeat all that has been sent
?BN...AND	Repeat all between..and....
?WA	Repeat the word after
?WB	Repeat the word before

The good operator will ask for only what fills are needed, separating different requests for repetition by using the break sign or double dash (—...—) between these parts. There is seldom any excuse for repeating a whole message just to get a few lost words.

Another interrogation method is sometimes used, the question signal (..——..) being sent between the last word received correctly and the first word (or first few words) received after the interruption. *RPT FROM . . . . TO . . . .* is a long way of asking for fills which we have heard used by beginners.

The figure four (....—) is a time-saving abbreviation which deserves popularity with traffic men. It is another of those hybrid abbreviations whose original meaning, "Please start me, where?" has come to us from Morse practice. Of course ?*AL* or *RPT AL* will serve the same purpose, where a request for a repetition of parts of a message has been missed.

• DELIVERING MESSAGES

Provisions of the Radio Act of 1934 make it a misdemeanor to give out information of any sort to any person except the addressee of a message. It is in no manner unethical to deliver an unofficial copy of a radiogram, if you carefully mark it *duplicate* or *unofficial copy* and do it to improve the speed of handling a message or to insure certain and prompt delivery. Do not forget that there are heavy fines prescribed by Federal laws for divulging the contents of messages to anyone *except* the person addressed in a message.

When it is possible to deliver messages in person, that is usually the most effective way. When the telephone does not prove instrumental in locating the party addressed in the message it is usually quickest to mail the message.

ARRL delivery rules:

Messages received by stations shall be delivered immediately.

Every domestic message shall be relayed within forty-eight (48) hours after receipt or if it cannot be relayed within this time shall be mailed to the addressee.

Messages for points outside North America must not be held longer than half the length of time required for them to reach their destination by mail.

When a message cannot be delivered, or if it is unduly delayed, a "service" message should be written and started back to the "office of origin."

Each operator who reads these pages is asked to assume *personal responsibility* for accuracy, speed of each message handled and *delivery* that we may approach a 100% delivery figure.

• THE SERVICE MESSAGE

A service message is a message sent by one station to another station relating to the service which we are or are not able to give in message handling. The service message may refer to non-deliveries, to delayed transmission, errors, or to any phase of message handling activity. It is not proper to abbreviate words in the texts of regular messages, but it is quite desirable and correct to use abbreviations in these station-to-station messages relating to traffic-handling work. Example:

HR SVC NR 291 W3CA CK XX ROANOKE VA NFT AUG 19
L C MAYBEE W7GE
110 SOUTH SEVENTH AVE
PASCO WASHN —...—
UR NR 87 AUG 17 TO CUSHING SIG BOB HELD HR UNDLD PSE GBA —...—
WOHLFORD W3CA

• COUNTING MESSAGES

To compare the number originated and delivered each month to learn some facts about the "efficiency" of our work in handling messages, a method of counting is used. Each time a message is *handled by radio* it counts one in the total.

A message received in person, by telephone, by telegraph, or by mail, *filed at the station and transmitted by radio* in proper form, counts as *one originated.*

A message *received by radio and delivered* in person, by telephone, telegraph, or mail, counts as *one delivered.*

A message *received by radio and sent forward by radio* counts as two messages *relayed* (one when received and again one when sent forward).

A "service" message counts the same as any other type of message.

In addition to the basic count of *one* for each time a message is handled by radio, an *extra credit* of one point for each delivery made by mail, telephone, in person, by messenger or other external means *other than use of radio* (which would count as a "relay" of course) will also be allowed. A message received by an operator for himself or his station or party on the immedite premises counts *only* "one delivered." A message for a third party delivered by *additional means or effort* will receive a point under "extra delivery credits."

The message total shall be the *sum* of the messages originated, delivered and relayed and the "extra" delivery credits. Each station's message file and log shall be used to determine the report submitted by that particular station. Messages with identical texts (so-

called rubber-stamp messages) shall count once only for *each* time the complete text, preamble and signature are sent by radio.

• LEAGUE OPERATING ORGANIZATION

Your ARRL arranges amateur operating activities, promotes preparation and organization for communications emergencies, establishes procedure to aid efficient operation, encourages good operating and maintains a strong field organization. The Communications Department of the League is concerned with the practical operation of stations in all branches of amateur activity. Appointments and awards are available for rag chewer, 'phone operator, traffic enthusiast and DX man. It is the League's policy to benefit each group concerned along lines of natural interest. All activities have specific objectives with widest participation invited. This insures maximum fun and benefit to the whole fraternity.

Whether your activity is directed toward 'phone or telegraph, there is a place for you in League organization.

We live in an age of specialization, and ARRL appointees specialize in particular branches of amateur operation for which they have special interest, aptitude or equipment. The voluntary acceptance of organization appointment carries prestige. It is a symbol of the mature, serious, accomplished amateur. Appointment also entitles the individual to certain bulletins that carry the first facts on new items of legislation and regulation as well as reports on activity and operating announcements. Every amateur should aim to become and remain a *member* of the League, and take an active part in his society and field organization work. There is fun and profit in doing this.

Complete information on all appointments and League awards for working all states (WAS), working all countries (WAC), etc., is included in the booklet, "Operating an Amateur Radio Station." Members of the League may obtain a copy free upon request; to others, a charge of 10 cents is made.

BIBLIOGRAPHY

[1] Plans for Emergency Operating, page 35, April, 1938, *QST*.

[2] What Will Be Expected of Amateurs — The FCC Emergency Regulations, page 71, February, 1939, *QST*.

[3] All Amateurs Invited to Join the ARRL Emergency Corps — Western Union Collaborates in Registrations, page 45, June, 1939, *QST*.

CHAPTER TWENTY-TWO

Regulations and Data

"Q" CODE

IN THE REGULATIONS accompanying the existing International Radiotelegraph Convention there is a very useful internationally-agreed code designed to meet major needs in international radio communication. This code follows. The abbreviations themselves have the meanings shown in the "answer" column. When an abbreviation is followed by an interrogation mark (?) it assumes the meaning shown in the "question" column.

Abbreviation	*Question*	*Answer*
QRA	What is the name of your station?	The name of my station is .....
QRB	How far approximately are you from my station?	The approximate distance between our stations is ..... nautical miles (or ..... kilometers).
QRC	What company (or Government Administration) settles the accounts for your station?	The accounts for my station are settled by the ..... company (or by the Government Administration of .....).
QRD	Where are you bound and where are you from?	I am bound for ..... from .....
QRG	Will you tell me my exact frequency (wave-length) in kc/s (or m)?	Your exact frequency (wave-length) is ..... kc/s (or ..... m).
QRH	Does my frequency (wave-length) vary?	Your frequency (wave-length) varies.
QRI	Is my note good?	Your note varies.
QRJ	Do you receive me badly? Are my signals weak?	I cannot receive you. Your signals are too weak.
QRK	What is the legibility of my signals (1 to 5)?	The legibility of your signals is .... (1 to 5).
QRL	Are you busy?	I am busy (or I am busy with .....). Please do not interfere.
QRM	Are you being interfered with?	I am being interfered with.
QRN	Are you troubled by atmospherics?	I am troubled by atmospherics.
QRO	Shall I increase power?	Increase power.
QRP	Shall I decrease power?	Decrease power.
QRQ	Shall I send faster?	Send faster (..... words per minute).
QRS	Shall I send more slowly?	Send more slowly (..... words per minute).
QRT	Shall I stop sending?	Stop sending.
QRU	Have you anything for me?	I have nothing for you.
QRV	Are you ready?	I am ready.
QRW	Shall I tell ..... that you are calling him on ..... kc/s (or ..... m)?	Please tell ..... that I am calling him on ..... kc/s (or ..... m).
QRX	Shall I wait? When will you call me again?	Wait (or wait until I have finished communicating with .....) I will call you at ..... o'clock (or immediately).
QRY	What is my turn?	Your turn is No. ..... (or according to any other method of arranging it).
QRZ	Who is calling me?	You are being called by .....
QSA	What is the strength of my signals (1 to 5)?	The strength of your signals is ..... (1 to 5).
QSB	Does the strength of my signals vary?	The strength of your signals varies.
QSD	Is my keying correct; are my signals distinct?	Your keying is incorrect; your signals are bad.
QSG	Shall I send ..... telegrams (or one telegram) at a time?	Send ..... telegrams (or one telegram) at a time.
QSJ	What is the charge per word for ..... including your internal telegraph charge?	The charge per word for ..... is ..... francs, including my internal telegraph charge.
QSK	Shall I continue with the transmission of all my traffic, I can hear you through my signals?	Continue with the transmission of all your traffic, I will interrupt you if necessary.
QSL	Can you give me acknowledgment of receipt?	I give you acknowledgment of receipt.
QSM	Shall I repeat the last telegram I sent you?	Repeat the last telegram you have sent me.
QSO	Can you communicate with ..... direct (or through the medium of .....)?	I can communicate with ..... direct (or through the medium of .....).
QSP	Will you retransmit to ..... free of charge?	I will retransmit to ..... free of charge.
QSR	Has the distress call received from ..... been cleared?	The distress call received from ..... has been cleared by .....
QSU	Shall I send (or reply) on ..... kc/s (or m) and/or on waves of Type A1, A2, A3, or B?	Send (or reply) on ..... kc/s (or ..... m) and/or on waves of Type A1, A2, A3, or B.
QSV	Shall I send a series of VVV .....?	Send a series of VVV .....

Abbreviation	*Question*	*Answer*
QSW	Will you send on ..... kc/s (or ..... m) and/or on waves of Type A1, A2, A3, or B?	I am going to send (or I will send) on ..... kc/s (or ..... m) and/or on waves of Type A1, A2, A3, or B.
QSX	Will you listen for ..... (call sign) or ..... kc/s (or ..... m)?	I am listening for ..... (call sign) on ..... kc/s (or ..... m).
QSY	Shall I change to transmission on ..... kc/s (or ..... m) without changing the type of wave? or Shall I change to transmission on another wave?	Change to transmission on ..... kc/s (or ..... m) without changing the type of wave or Change to transmission on another wave.
QSZ	Shall I send each word or group twice?	Send each word or group twice.
QTA	Shall I cancel telegram No. ..... as if it had not been sent?	Cancel telegram No. ..... as if it had not been sent.
QTB	Do you agree with my number of words?	I do not agree with your number of words; I will repeat the first letter of each word and the first figure of each number.
QTC	How many telegrams have you to send?	I have ..... telegrams for you (or for .....).
QTE	What is my true bearing in relation to you? or What is my true bearing in relation ..... (call sign)? What is the true bearing of ..... (call sign) in relation to ..... (call sign)?	Your true bearing in relation to me is .... degrees or Your true bearing in relation to ..... (call sign) is ..... degrees at ..... (time) or The true bearing of ..... (call sign) in relation to ..... (call sign) is ..... degrees at ..... (time).
QTF	Will you give me the position of my station according to the bearings taken by the direction-finding stations which you control?	The position of your station according to the bearings taken by the direction-finding stations which I control is ..... latitude ..... longitude.
QTG	Will you send your call sign for fifty seconds followed by a dash of ten seconds on ..... kc/s (or ..... m) in order that I may take your bearing?	I will send my call sign for fifty seconds followed by a dash of ten seconds on ..... kc/s (or ..... m) in order that you may take my bearing.
QTH	What is your position in latitude and longitude (or by any other way of showing it)?	My position is ..... latitude ..... longitude (or by any other way of showing it).
QTI	What is your true course?	My true course is ..... degrees.
QTJ	What is your speed?	My speed is ..... knots (or ..... kilometers) per hour.
QTM	Send radioelectric signals and submarine sound signals to enable me to fix my bearing and my distance.	I will send radioelectric signals and submarine sound signals to enable you to fix your bearing and your distance.
QTO	Have you left dock (or port)?	I have just left dock (or port).
QTP	Are you going to enter dock (or port)?	I am going to enter dock (or port).
QTQ	Can you communicate with my station by means of the International Code of Signals?	I am going to communicate with your station by means of the International Code of Signals.
QTR	What is the exact time?	The exact time is .....
QTU	What are the hours during which your station is open?	My station is open from ..... to .....
QUA	Have you news of ..... (call sign of the mobile station)?	Here is news of ..... (call sign of the mobile station).
QUB	Can you give me in this order, information concerning: visibility, height of clouds, ground wind for ..... (place of observation)?	Here is the information requested .....
QUC	What is the last message received by you from ..... (call sign of the mobile station)?	The last message received by me from ..... (call sign of the mobile station) is .....
QUD	Have you received the urgency signal sent by ..... (call sign of the mobile station)?	I have received the urgency signal sent by ..... (call sign of the mobile station) at ..... (time).
QUF	Have you received the distress signal sent by ..... (call sign of the mobile station)?	I have received the distress signal sent by ..... (call sign of the mobile station) at ..... (time).
QUG	Are you being forced to alight in the sea (or to land)?	I am forced to alight (or land) at ..... (place).
QUH	Will you indicate the present barometric pressure at sea level?	The present barometric pressure at sea level is ..... (units).
QUJ	Will you indicate the true course for me to follow, with no wind, to make for you?	The true course for you to follow, with no wind, to make for me is ..... degrees at ..... (time).
QUK	Can you tell me the condition of the sea observed at ..... (place or coördinates)?	The sea at ..... (place or coördinates) is .....
QUL	Can you tell me the swell observed at ... . (place or coördinates)?	The swell at ..... (place or coördinates) is .....
QUM	Is the distress traffic ended?	The distress traffic is ended.

Special abbreviations adopted by the ARRL:

QST General call preceding a message addressed to all amateurs and ARRL Members. This is in effect "CQ ARRL."

QRR Official ARRL "land SOS." A distress call for use by stations in emergency zones only.

Scales Used in Expressing Signal Strength and Readability

(See QRK and QSA in the Q Code)

Strength		*Readability*	
QSA1	Barely perceptible.	QRK1	Unreadable.
QSA2	Weak.	QRK2	Readable now and then.
QSA3	Fairly good.	QRK3	Readable with difficulty.
QSA4	Good.	QRK4	Readable.
QSA5	Very good.	QRK5	Perfectly readable.

PREFIXES

Alaska	K7
Antarctica	KC4
Baker Island, Howland Island, Am. Phoenix Islands	KF6
Canal Zone	K5, NY1, NY2
Guam	KB6
Guantanamo	NY4
Hawaiian Islands	K6
Jarvis Island, Palmyra Group	KG6
Johnston Island	KE6
Midway Island	KD6
Philippine Islands	KA
Puerto Rico	K4
Samoa, American	KH6
Swan Island	KD4
United States	W [N]
Virgin Islands	KB4
Wake group	KC6

FCC FREQUENCY ALLOCATIONS

The following is a condensed table of allocations in the U.S.A. excepting amateur:

Frequency, Kilocycles	*Allocation*
10–103	Fixed, government.
103–141	Coastal telegraph, government.
143–193	Maritime calling, ship telegraph, fixed and coastal telegraph. (190 kc. to state police and government.)
194–391	Government, fixed, airport, aircraft (375 kc. to direction finding).
392–548	Coastal telegraph, government, ship telegraph, aircraft, intership 'phone. (500 kc. to maritime calling and government.)
550–1,600	Broadcasting (1,592 to Alaska services).
1,600–1,712	Geophysical, relay, police, government, experimental, marine fire, aviation, motion picture.
2,004–2,500	Experimental visual and relay broadcast, police, government, ship harbor, fixed, miscellaneous.
2,504–3,497.5	Coastal harbor, government, aviation, fixed, miscellaneous.
4,005–6,000	Government, aviation, fixed.
6,020–6,190	International broadcast, government.
6,200–6,990	Coastal telegraph and 'phone, government, fixed, miscellaneous.
7,305–9,490	Government, fixed, aviation, ship telegraph, coastal telegraph, miscellaneous.
9,510–9,690	International broadcast.
9,710–11,000	Government, fixed aviation.
11,010–11,685	Ship telegraph, maritime calling, government, coastal telegraph, fixed, aviation, miscellaneous.
11,710–11,890	International broadcast, government.
11,910–13,990	Aviation, fixed, government, ship telegraph, coastal telegraph, miscellaneous.
14,410–15,085	Fixed.
15,110–15,330	International broadcast, government.
15,355–17,740	Fixed, government, aviation, ship and coastal telegraph, miscellaneous.
17,760–17,840	International broadcast.
17,860–21,440	Fixed, government, aviation.
21,460–21,650	International broadcast, government.
21,650–23,175	Coastal telegraph, government, ship telegraph, miscellaneous.
23,200–25,000	Aviation, government, miscellaneous.
25,025–26,975	Broadcast, government.
27,000–27,975	Government, general communication.
30,000–42,000	Police, government, relay broadcast, coastal and ship harbor, miscellaneous.
42,000–50,000	Broadcast and educational (FM).
50,000–56,000	Television, fixed.
60,000–112,000	Government, television.
116,110–139,960	Broadcast, government, aviation, police, miscellaneous.
140,100–143,880	Aviation.
144,000–400,000	Government, television, fixed.
401,000 and above	Experimental.

UNITED STATES AMATEUR REGULATIONS

Pursuant to the basic communications law, general regulations for amateurs have been drafted by the Federal Communications Commission. The number before each regulation is its official number in the complete book of regulations for all classes of radio stations as issued by the Commission; the number of each regulation is of no consequence to the amateur, except as a means of reference.

These regulations are correct as of September 15, 1941. As the regulations are subject to change from time to time, it is recommended that *The Radio Amateur's License Manual* (25¢ postpaid, from the ARRL) be consulted for latest official regulations, since it is always kept up-to-date either by frequent revisions or by the inclusion of a "change-sheet" giving necessary corrections. Latest changes always appear in *QST*, as well.

Every amateur should be *thoroughly familiar* with these regulations and their effect, although, of course, it is not necessary to know the exact wording from memory.

Particular attention should be given to the "Temporary FCC Orders" at the end of this listing, since they modify some of the regulations at the present time.

GENERAL REGULATIONS APPLICABLE TO AMATEURS

1.71. *Applications made on prescribed forms.* Each application for an instrument of authorization shall comply with the Commission's Rules and Regulations and shall be made in writing . . . on a form furnished by . . . the Commission. . . . Separate application shall be filed for each instrument of authorization requested. . . . The required forms may be obtained from the Commission or from any of its field offices. (For a list of such offices and related geographical districts see the table following these regulations.)

1.351. *Place of filing; number of copies.* Each application for . . . station license . . . with respect to the number of copies and place of filing, shall be submitted as follows: . . .

Amateur: 1 copy to be sent as follows: (*a*) To proper district office if it requires personal appearance for operator examination under direct supervision from that office; (*b*) direct to Washington, D. C., in all other cases, including examinations for Class C privileges.

1.359. *Modification of license* . . . each application for modification of license shall be filed at least 60 days prior to the contemplated modification of license: *Provided, however,* That in emergencies and for good cause shown, the requirements hereof may be waived insofar as time for filing is concerned.

1.360. *Renewal of license.* Unless otherwise directed by the Commission, each application for renewal of license shall be filed at least 60 days prior to the expiration date of the license sought to be renewed.

1.391. *Answers to notices of violation.* Any licensee receiving official notice of a violation of the terms of the Communications Act of 1934, any legislative act, Executive order, treaty to which the United States is a party, or the Rules and Regulations of the Federal Communications Commission, shall, within 3 days from such receipt, send a written answer direct to the Federal Communications Commission at Washington, D. C., and a copy thereof to the office of the Commission originating the official notice when the originating office is other than the office of the Commission in Washington, D. C.: *Provided, however,* That if an answer cannot be sent nor an acknowledgment made within such 3-day period by reason of illness or other unavoidable circumstances, acknowledgment and answer shall be made at the earliest practicable date with a satisfactory explanation of the delay. The answer to each notice shall be complete in itself and shall not be abbreviated by reference to other communications or answers to other notices. If the notice relates to some violation that may be due to the physical or electrical characteristics of transmitting apparatus, the answer shall state fully what steps, if any, are taken to prevent future violations, and if any new apparatus is to be installed, the date such apparatus was ordered, the name of the manufacturer, and promised date of delivery. . . . If the notice of violation relates to some lack of attention or improper operation of the transmitter, the name and license number of the operator in charge shall be given.

1.401. *Revocation of station license.* Whenever the Commission shall institute a revocation proceeding against the holder of any radio station . . . license . . . it shall initiate said proceeding by serving upon said licensee an order of revocation effective not less than 15 days after written notice thereof is given the licensee. The order of revocation shall contain a statement of the grounds and reasons for such proposed revocation and a notice of the licensee's right to be heard by filing with the Commission a written request for hearing within 15 days after receipt of said order. Upon the filing of such written request for hearing by said licensee the order of revocation shall stand suspended and the Commission will set a time and place for hearing and shall give the licensee and other interested parties notice thereof. If no request for hearing on any order of revocation is made by the licensee against whom such an order is directed within the time hereinabove set forth, the order of revocation shall become final and effective, without further action of the Commission. When any order of revocation has become final, the person whose license has been revoked shall forthwith deliver the station license in question to the inspector in charge of the district in which the licensee resides.

1.411. *Suspension of operator licenses: Order of suspension.* No order of suspension of any operator's license shall take effect until 15 days' notice in writing thereof, stating the cause for the proposed suspension, has been given to the operator licensee who may make written application to the Commission at any time within said 15 days for a hearing upon such order. The notice to the operator licensee shall not be effective until actually received by him, and from that time he shall have 15 days in which to mail the said application. In the event that physical conditions prevent mailing of the application at the expiration of the 15-day period, the application shall then be mailed as soon as possible thereafter, accompanied by a satisfactory explanation of the delay. Upon receipt by the Commission of such application for a hearing, said order of suspension shall be held in abeyance until the conclusion of the hearing which shall be conducted under such rules as the Commission shall deem appropriate. Upon the conclusion of said hearing the Commission may affirm, modify, or revoke said order of suspension.

1.412. *Suspension of operator licenses; Proceedings.* Proceedings for the suspension of an operator's license shall in all cases be initiated by the entry of an order of suspension. Respondent will be given notice thereof together with notice of his right to be heard and to contest the proceeding. The effective date of the suspension will not be specified in the original order but will be fixed by subsequent motion of the Commission in accordance with the conditions specified above. Notice of the effective date of suspension will be given respondent, who shall send his operator license to the office of the Commission in Washington, D. C., on or before the said effective date, or, if the effective date has passed at the time notice is received, the license shall be sent to the Commission forthwith.

2.45. *License expiration time and periods.* Each station license will be issued so as to expire at the hour 3 A.M. eastern standard time. The normal license periods and expiration dates are specified under the rules governing the class of station concerned. (*See Sec. 12.64 of amateur regulations for amateur station-license period.*)

2.48. *Station inspection.* The licensee of any radio station shall make the station available for inspection by representatives of the Commission at any reasonable hour and under the regulations governing the class of station concerned.

2.53. *Operators, place of duty.* (a) Except as may be provided in the rules governing a particular class of station, one or more licensed operators of the grade specified by these rules and regulations shall be on duty at the place where the transmitting apparatus of each station is located and in actual charge thereof whenever it is being operated; *Provided, however, That:* (1) Subject to the provisions of paragraph (b) of this section, in the case of a station licensed for service other than broadcast, where remote control is used, the Commission may modify the foregoing requirements upon proper application and showing being made so that such operator or operators may be on duty at the control station in lieu of the place where the transmitting apparatus is located. . . .

(b) Authority to employ an operator at the control point in accordance with paragraph (a) (1) of this section shall be subject to the following conditions:

(1) The transmitter shall be so installed and protected that it is not accessible to other than duly authorized persons.

(2) The emissions of the transmitter shall be continuously monitored at the control point by a licensed operator of the grade specified for the class of station involved.

(3) Provision shall be made so that the transmitter can quickly and without delay be placed in an inoperative condition in the event there is a deviation from the terms of the station license.

(4) The radiation of the transmitter shall be suspended immediately when there is a deviation from the terms of the station license.

2.59. *Distress messages.* Each station licensee shall give absolute priority to radio communications or signals relating to ships or aircraft in distress; shall cease all sending on frequencies which will interfere with hearing a radio communication or signal of distress. . . .

2.91. *Military or naval test communications.* The licensee of any radio station may, if proper notice from authorized government representatives is filed with and approved by the Commission, utilize such stations for military or naval test communications (messages not necessary for the conduct of ordinary governmental business) in preparation for national defense during the period or periods stated in said notice subject to the sole condition that no interference to any service of another country will result therefrom. Nothing herein or in any other regulation of the Commission shall be construed to require any such station to participate in any such test.

AMATEUR REGULATIONS

DEFINITIONS

12.1. *Amateur service.* The term "amateur service" means a radio service carried on by amateur stations.

12.2. *Amateur station.* The term "amateur station" means a station used by an "amateur", that is, a duly authorized person interested in radio technique solely with a personal aim and without pecuniary interest. It embraces all radio transmitting apparatus at a particular location used for amateur service and operated under a single instrument of authorization.

12.3. *Amateur portable station.* The term "amateur portable station" means an amateur station that is portable in fact, that is so constructed that it may conveniently be moved about from place to place for communication, and that is in fact so moved from time to time, but which is not operated while in motion.

12.4. *Amateur portable-mobile station.* The term "amateur portable-mobile station" means an amateur station that is portable in fact, that is so constructed that it may conveniently be transferred to or from a mobile unit or from one such unit to another, and that is in fact so transferred from time to time and is ordinarily used while such mobile unit is in motion.

12.5. *Amateur radio communication.* The term "amateur radio communication" means radio communication between amateur stations solely with a personal aim and without pecuniary interest.

12.6. *Amateur operator.* The term "amateur operator" means a person holding a valid license issued by the Federal Communications Commission authorizing him to operate licensed amateur stations.

LICENSES; PRIVILEGES

12.21. *Eligibility for license.* The following are eligible to apply for amateur operator license and privileges:

Class A — A United States citizen who has within five years of receipt of application held license as an amateur operator for a year or who in lieu thereof qualified under Section 12.46.

Class B — Any United States citizen.

Class C — A United States citizen whose actual residence, address, and station, are more than 125 miles airline from the nearest point where examination is given at least quarterly for Class B; or is shown by physician's certificate to be unable to appear for examination due to protracted disability; or is shown by certificate of the commanding officer to be in a camp of the Civilian Conservation Corps or in the regular military or naval service of the United States at a military post or naval station and unable to appear for Class B examination.

12.22. *Classification of operating privileges.* Amateur operating privileges are as follows:

Class A — All amateur privileges.

Class B — Same as Class A except specially limited as in Section 12.116.

Class C — Same as Class B.

12.23. *Scope of operator authority.* Amateur operators' licenses are valid only for the operation of licensed amateur stations; *provided, however,* any person holding a valid radio operator's license of any class may operate stations in the experimental service licensed for, and operating on, frequencies above 300,000 kilocycles.

12.24. *Posting of license.* The original operator's license shall be posted in a conspicuous place in the room occupied by such operator while on duty or kept in his personal possession and available for inspection at all times while the operator is on duty, except when such license has been filed with application for modification or renewal, or has been mutilated, lost, or destroyed, and application has been made for a duplicate.

12.25. *Duplicate license.* Any licensee applying for a duplicate license to replace an original which has been lost, mutilated, or destroyed, shall submit to the Commission such mutilated license or affidavit attesting to the facts regarding the manner in which the original was lost or destroyed. If the original is later found, it or the duplicate shall be returned to the Commission.

12.26. *Renewal of amateur operator license.* An amateur operator license may be renewed upon proper application and a showing that within three months of receipt of the application by the Commission the licensee has lawfully operated an amateur station licensed by the Commission, and that he has communicated by radio with at least three other such amateur stations. Failure to meet the requirements of this section will make it necessary for the applicant to again qualify by examination.

12.27. *Who may operate an amateur station.* An amateur station may be operated only by a person holding a valid amateur operator's license, and then only to the extent provided for by the class of privileges for which the operator's license is endorsed. When an amateur station uses radiotelephony (type A-3 emission) the licensee may permit any person to transmit by voice, provided a duly licensed amateur operator maintains control over the emissions by turning the carrier on and off when required and signs the station off after the transmission has been completed.

EXAMINATIONS

12.41. *When required.* Examination is required for a new license as an amateur operator or for change of class of privileges.

12.42. *Elements of examination.* The examination for amateur operator privileges will comprise the following elements:

1. Code test — ability to send and receive, in plain language, messages in the International Morse Code at a speed of not less than thirteen words per minute, counting five characters to the word, each numeral or punctuation mark counting as two characters.
2. Amateur radio operation and apparatus, both telephone and telegraph.
3. Provisions of treaty, statute and regulations affecting amateurs.
4. Advanced amateur radiotelephony.

12.43. *Elements required for various privileges.* Examinations for Class A privileges will include all four examination elements as specified in Section 12.42.

Examinations for Classes B and C privileges will include elements 1, 2, and 3 as set forth in Section 12.42.

12.44. *Manner of conducting examination.* Examinations for Class A and Class B privileges will be conducted by an authorized Commission employee or representative at points specified by the Commission.

Examinations for Class C privileges will be given by volunteer examiner(s), whom the Commission may designate or permit the applicant to select; in the latter event the examiner giving the code test shall be a holder of an amateur license with Class A or B privileges, or have held within five years a license as a professional radiotelegraph operator or have within that time been employed as a radiotelegraph operator in the service of the United States; and the examiner for the written test, if not the same individual, shall be a person of legal age.

12.45. *Additional examination for holders of Class C privileges.* The Commission may require a licensee holding Class C privileges to appear at an examining point for a Class B examination. If such licensee fails to appear for examination when directed to do so, or fails to pass the supervisory examination, the license held will be canceled and the holder thereof will not be issued another license for the Class C privileges.

Whenever the holder of Class C amateur operator privileges changes his actual residence or station location to a point where he would not be eligible to apply for Class C privileges in the first instance, or whenever a new examining point is established in a region from which applicants were previously eligible for Class C privileges, such holders of Class C privileges shall within four months thereafter appear at an examining point and be examined for Class B privileges. The license will be canceled if such licensee fails to appear, or fails to pass the examination.

12.46. *Examination abridgment.* An applicant for Class A privileges, who holds a license with Class B privileges, will be required to pass only the added examination element, No. 4. (See Section 12.42.)

A holder of Class C privileges will not be accorded an abridged examination for either Class B or Class A privileges.

An applicant who has held a license for the class of privileges specified below, within five years prior to receipt of application, will be credited with examination elements as follows:

Class of license or privileges	*Credits*
Commercial extra first	Elements 1, 2 & 4
Radiotelegraph 1st, 2nd, or 3rd	Elements 1 & 2
Radiotelephone 1st or 2nd	Elements 2 & 4
Class A	Elements 2 & 4

No examination credit is given on account of license of Radiotelephone 3rd Class, nor for other class of license or privileges not above listed.

12.47. *Examination procedure.* Applicants shall write examinations in longhand — code tests and diagrams in ink or pencil, written tests in ink — except that applicants unable to do so because of physical disability may typewrite or dictate their examinations and, if unable to draw required diagrams, may make instead a detailed description essentially equivalent. The examiner shall certify the nature of the applicant's disability and, if the examination is dictated, the name and address of the person(s) taking and transcribing the applicant's dictation.

12.48. *Grading.* Code tests are graded as passed or failed, separately for sending and receiving tests. A code test is failed unless free of omission or other error for a continuous period of at least one minute at required speed. Failure to pass the required code test will terminate the examination. (See Sec. 12.49.)

A passing grade of 75 per cent is required separately fo Class B and Class A written examinations.

12.49. *Eligibility for reëxamination.* An applicant who fails examination for amateur privileges may not take another examination for such privileges within two months, except that this rule shall not apply to an examination for Class B following one for Class C.

LICENSES

12.61. *Eligibility for amateur station license.* License for an amateur station will be issued only to a licensed amateur operator who has made a satisfactory showing of control of proper transmitting apparatus and control of the premises upon which such apparatus is to be located; *provided, however*, that in the case of an amateur station of the military or Naval Reserve of the United States located in approved public quarters and established for training purposes, but not operated by the United States Government, a station license may be issued to a person in charge of such a station although not a licensed amateur operator.

12.62. *Eligibility of corporations or organizations to hold license.* An amateur station license will not be issued to a school, company, corporation, association, or other organization; nor for their use; *provided, however*, that in the case of a bona fide amateur radio society a station license may be issued in accordance with Section 12.61 to a licensed amateur operator as trustee for such society.

12.63. *Location of station.* An amateur radio station, and the control point thereof when remote control is authorized, shall not be located on premises controlled by an alien. Authority to operate by remote control will be granted only upon the filing of a proper application, and supported by a showing of the applicant's legal control of the control point, the means employed to control emissions, the equipment and method for monitoring, and the precautions adopted to prevent access to the premises by unauthorized persons.

12.64. *License period.* License for an amateur station will normally be for a period of three years from the date of issuance of a new, renewed, or modified license.

12.65. *Authorized operation.* An amateur station license authorizes the operation of all transmitting apparatus used by the licensee at the location specified in the station license and in addition the operation of portable and portable-mobile stations at other locations under the same instrument of authorization.

12.66. *Renewal of amateur station license.* An amateur station license may be renewed upon proper application and a showing that, within three months of receipt of the application by the Commission, the licensee thereof has lawfully operated such station in communication by radio with at least three other amateur stations licensed by the Commission, except that in the case of an application for renewal of station license issued for an amateur society or reserve group, the required operation may be by any licensed amateur operator. Upon failure to comply with the above requirements, a successor license will not be granted until two months after expiration of the old license.

12.67. *Posting of station license.* The original of each station license or a facsimile thereof shall be posted by the licensee in a conspicuous place in the room in which the transmitter is located or kept in the personal possession of the operator on duty, except when such license has been filed with application for modification or renewal, or has been mutilated, lost, or destroyed, and application has been made for a duplicate.

CALL SIGNALS

12.81. *Assignment of call letters.* Amateur station calls will be assigned in regular order and special requests will not be considered except that a call may be reassigned to the latest holder, or if not under license during the past five years to any previous holder, or to an amateur organization in memoriam to a deceased member and former holder, and particular calls may be temporarily assigned to stations connected with events of general public interest.

12.82. *Call signals for member of U.S.N.R.* In the case of an amateur licensee whose station is licensed to a regularly commissioned or enlisted member of the United States Naval Reserve, the Commandant of the naval district in which such station is located may authorize in his discretion the use of the call-letter prefix N in lieu of the prefix W or K, assigned in the license issued by the Commission; provided that such N prefix shall be used only when operating in the frequency bands 1750–2050 kilocycles, 3500–4000 kilocycles, 56,000–60,000 kilocycles, and 400,000–401,000 kilocycles in accordance with instructions to be issued by the Navy Department.

12.83. *Transmission of call signals.* An operator of an amateur station shall transmit the call letters of the station called or being worked and the call letters assigned the station which he is operating at the beginning and end of each transmission and at least once every 10 minutes during every transmission of more than 10 minutes duration. In the case of stations conducting an exchange of several transmissions in sequence, each transmission of which is of less than 3 minutes duration, the call letters of the communicating stations need be transmitted only once every 10 minutes of operation in addition to transmitting the call letters, as above, at the beginning and at the termination of the correspondence. In addition, an operator of an amateur portable or portable-mobile radiotelegraph station shall transmit immediately after the call of the station the fraction-bar character (DN) followed by the number of the amateur call area in which the portable or portable-mobile amateur station is then operating, as for example:

Example 1. Portable or portable-mobile amateur station operating in the third amateur call area calls a fixed amateur station: W1ABC W1ABC W1ABC DE W2DEF DN3 W2DEF DN3 W2DEF DN3 AR.

Example 2. Fixed amateur station answers the portable or portable-mobile amateur station: W2DEF W2DEF W2DEF DE W1ABC W1ABC W1ABC K.

Example 3. Portable or portable-mobile amateur station calls a portable or portable-mobile amateur station: W3GHI W3GHI W3GHI DE W4JKL DN4 W4JKL DN4 W4JKL DN4 AR.

If telephony is used, the call sign of the station shall be followed by an announcement of the amateur call area in which the portable or portable-mobile station is operating.

12.91. *Requirements for portable and portable-mobile operation.* A licensee of an amateur station may operate portable amateur stations (Section 12.3) in accordance with the provisions of Sections 12.82, 12.83, 12.92 and 12.136. Such licensee may operate portable and portable-mobile amateur stations without regard to Section 12.92, but in compliance with Sections 12.82, 12.83 and 12.136, when such operation takes place on authorized amateur frequencies above 28,000 kilocycles.

12.92. *Special provisions for portable stations.* Advance notice in writing shall be given by the licensee to the inspector in charge of the district in which such portable station is to be operated. Such notices shall be given prior to any operation contemplated, and shall state the station call, name of licensee, the date of proposed operation, and the locations as specifically as possible. An amateur station operating under this Section shall not be operated during any period exceeding one month without giving further notice to the inspector in charge of the radio-inspection district in which the station will be operated, nor more than four consecutive periods of one month at the same location. This Section does not apply to the operation of portable or portable-mobile amateur stations on frequencies above 28,000 kilocycles. (See Section 12.91.)

12.93. *Special provisions for non-portable stations.* The provisions for portable stations shall not be applied to any non-portable station except that:

(a) An amateur station that has been moved from one permanent location to another permanent location may be operated at the latter location in accordance with the provisions governing portable stations for a period not exceeding four months, but in no event beyond the expiration date of the license, provided an application for modification of license to change the permanent location has been made to the Commission in accordance with the rules and regulations.

(b) The licensee of an amateur station who changes residence temporarily and moves his fixed station equipment thereto or the licensee-trustee for an amateur radio society which changes the location of its fixed amateur station may operate from the new location provided that such new residence or location is to continue for a period of at least fifteen days and not to exceed four months; and provided further, that the following requirements are fulfilled:

(1) Advance notice in writing shall be given by the licensee or licensee-trustee to the Commission's office in Washington, and the Inspector in Charge of the district in which such fixed station is to be operated.

(2) A notice as above shall be required for each change in residence or location, and a move to the original, former, or new location shall require additional notice before engaging in operation.

(3) A station operating under this Section shall employ the calling procedure specified in Sec. 12.83, using the fractional bar character followed by the number of the amateur call area in which the station is then operated.

USE OF AMATEUR STATIONS

12.101. *Points of communication.* An amateur station shall communicate only with other amateur stations, except that in emergencies or for testing purposes it may be used also for communication with commercial or Government radio stations. In addition, amateur stations may communicate with any mobile radio station which is licensed by the Commission to communicate with amateur stations, and with stations of expeditions which may also be authorized to communicate with amateur stations. They may also make

transmissions to points equipped only with receiving apparatus for the measurement of emissions, observation of transmission phenomena, radio control of remote objects, and similar purely experimental purposes.

12.102. *No remuneration for use of station.* An amateur station shall not be used to transmit or receive messages for hire, nor for communication for material compensation, direct or indirect, paid or promised.

12.103. *Broadcasting prohibited.* An amateur station shall not be used for broadcasting any form of entertainment, nor for the simultaneous retransmission by automatic means of programs or signals emanating from any class of station other than amateur.

12.104. *Radiotelephone tests.* The transmission of music by an amateur station is forbidden. However, single audio-frequency tones may be transmitted by radiotelephony for test purposes of short duration in connection with the development of experimental radiotelephone equipment.

ALLOCATION OF FREQUENCIES

* 12.111. *Frequencies for exclusive use of amateur stations.* The following bands of frequencies are allocated exclusively for use by amateur stations:

1,750 to 2,050 kc.	28,000 to 30,000 kc.
3,500 to 4,000 kc.	56,000 to 60,000 kc.
7,000 to 7,300 kc.	112,000 to 116,000 kc.
14,000 to 14,400 kc.	224,000 to 230,000 kc.
	400,000 to 401,000 kc.

12.112. *Use of frequencies above 300,000 kilocycles.* The licensee of an amateur station may, subject to change upon further order, operate amateur stations, with any type of emission authorized for amateur stations, on any frequency above 300,000 kilocycles without separate licenses therefor.

12.113. *Individual frequency not specified.* Transmissions by an amateur station may be on any frequency within the bands assigned. Sideband frequencies resulting from keying or modulating a transmitter shall be confined within the frequency band used.

12.114. *Types of emission.*[1] All bands of frequencies allocated to the amateur service may be used without modulation (Type A-1 emission).[1]

Type A-1 — Telegraphy on pure continuous waves.
Type A-2 — Modulated telegraphy.
Type A-3 — Telephony.
Type A-4 — Facsimile.
Type A-5 — Television.

* 12.115. *Additional bands for types of emission using amplitude modulation.* The following bands of frequencies are allocated for use by amateur stations using additional types of emission [1] as shown:

1,750 to 2,050 kc.	—	—	A-4	—
1,800 to 2,050 kc.	—	A-3	—	—
28,100 to 30,000 kc.	—	A-3	—	—
56,000 to 60,000 kc.	A-2	A-3	A-4	—
112,000 to 116,000 kc.	A-2	A-3	A-4	A-5
224,000 to 230,000 kc.	A-2	A-3	A-4	A-5
400,000 to 401,000 kc.	A-2	A-3	A-4	A-5

* 12.116. *Additional bands for radiotelephony.* Amateur stations may use radiotelephony with amplitude modulation (Type A-3 emission)[1] in the frequency bands 3900 to 4000 kc. and 14,150 to 14,250 kc.; *provided* the station is licensed to a person who holds an amateur operator license endorsed with Class A privileges, and actually is operated by an amateur operator holding Class A privileges.

12.117. *Frequency modulation.* The following bands of frequencies are allocated for use by amateur stations for radiotelephone frequency modulation transmission: [2]

29,250 to 30,000 kc.
58,500 to 60,000 kc.
112,000 to 116,000 kc.
224,000 to 230,000 kc.
400,000 to 401,000 kc.

EQUIPMENT AND OPERATION

12.131. *Maximum power input.* The licensee of an amateur station is authorized to use a maximum power input of 1 kilowatt to the plate circuit of the final amplifier stage of an oscillator-amplifier transmitter or to the plate circuit of an oscillator transmitter. An amateur transmitter operating with a power input exceeding nine-hundred watts to the plate circuit shall provide means for accurately measuring the plate power input to the vacuum tube, or tubes, supplying power to the antenna.

12.132. *Power supply to transmitter.* The licensee of an amateur station using frequencies below 60,000 kilocycles shall use adequately filtered direct-current plate power supply for the transmitting equipment to minimize frequency modulation and to prevent the emission of broad signals.

12.133. *Requirements for prevention of interference.* Spurious radiations from an amateur transmitter operating on a frequency below 60,000 kilocycles shall be reduced or eliminated in accordance with good engineering practice and shall not be of sufficient intensity to cause interference on receiving sets of modern design which are tuned outside the frequency band of emission normally required for the type of emission employed. In the case of A-3 emission, the transmitter shall not be modulated in excess of its modulation capability to the extent that interfering spurious radiations occur, and in no case shall the emitted carrier be amplitude-modulated in excess of 100 per cent. Means shall be employed to insure that the transmitter is not modulated in excess of its modulation capability. A spurious radiation is any radiation from a transmitter which is outside the frequency band of emission normal for the type of transmission employed, including any component whose frequency is an integral multiple or submultiple of the carrier frequency (harmonics and subharmonics), spurious modulation products, key clicks, and other transient effects, and parasitic oscillations. The frequency of emission shall be as constant as the state of the art permits.

12.134. *Modulation of carrier waves.* Except for brief tests or adjustments, an amateur radiotelephone station shall not emit a carrier wave on frequencies below 112,000 kilocycles unless modulated for the purpose of communication.

12.135. *Frequency measurement and regular check.* The licensee of an amateur station shall provide for measurement of the transmitter frequency and establish procedure for checking it regularly. The measurement of the transmitter frequency shall be made by means independent of the frequency control of the transmitter and shall be of sufficient accuracy to assure operation within the frequency band used.

12.136. *Logs.* Each licensee of an amateur station shall keep an accurate log of station operation, including the following data:

(a) The date and time of each transmission. (The date need only be entered once for each day's operation. The expression "time of each transmission" means the time of making a call and need not be repeated during the sequence of communication which immediately follows; however, an entry shall be made in the log when "signing off" so as to show the period during which communication was carried on.)

(b) The signature of the person manipulating the transmitting key of a radiotelegraph transmitter or the signature of the person operating a transmitter of any other type (type A-3 or A-4 emission) with statement as to type of emission, and the signature of any other person who transmits by voice over a radiotelephone transmitter (type A-3 emission). (The signature need only be entered once in the log provided the log contains a statement to the effect that all transmissions were made by the person named except where otherwise stated. The signature of any other person who operates the station shall be entered in the proper space for his transmissions.)

(c) Call letters of the station called. (This entry need not be repeated for calls made to the same station during any sequence of communication, provided the time of "signing off" is given.)

(d) The input power to the oscillator, or to the final amplifier stage where an oscillator-amplifier transmitter is employed. (This need be entered only once, provided the input power is not changed.)

(e) The frequency band used. (This information need be entered only once in the log for all transmissions until there is a change in frequency to another amateur band.)

(f) The location of a portable or portable-mobile station at the time of each transmission. (This need be entered only once provided the location of the station is not changed. However, suitable entry shall be made in the log upon changing location, showing the type of vehicle or mobile unit in which the station is operated and the approximate geographical location of the station at the time of operation.)

(g) The message traffic handled. (If record communications are handled in regular message form, a copy of each message sent and received shall be entered in the log or retained on file for at least one year.)

The log shall be preserved for a period of at least one year following the last date of entry. The copies of record communications and station log, as required under this section, shall be available for inspection upon request by an authorized Government representative.

* Temporarily suspended. See, near end of this chapter, discussion of "Temporary Rearrangement of Frequencies."

[1] *Types of emission:* Emissions are classified according to the purpose for which they are used, assuming their modulation or their possible keying to be only in amplitude, as follows:

[2] When using frequency modulation no simultaneous amplitude modulation is permitted.

SPECIAL CONDITIONS

12.151. *Additional conditions to be observed by licensee.* An amateur station license is granted subject to the conditions imposed in Sections 12.152 to 12.155 inclusive, in addition to any others that may be imposed during the term of the license. Any licensee receiving due notice requiring the station licensee to observe such conditions shall immediately act in conformity therewith.

12.152. *Quiet hours.* In the event that the operation of an amateur station causes general interference to the reception of broadcast programs with receivers of modern design, such amateur station shall not operate during the hours from 8 o'clock P.M. to 10:30 P.M., local time, and on Sunday for the additional period from 10:30 A.M. until 1 P.M., local time, upon such frequency or frequencies as cause such interference.

12.153. *Second notice of same violation.* In every case where an amateur station licensee is cited a second time within a year for the same violation under Sections 12.111, 12.113, 12.114, 12.116, 12.117, 12.132, or 12.133, the Commission will direct that the station remain silent from 6 P.M. to 10:30 P.M., local time, until written notice has been received authorizing full-time operation. The licensee shall arrange for tests at other hours with at least two amateur stations within fifteen days of the date of notice, such tests to be made for the specific purpose of aiding the licensee in determining whether the emissions of his station are in accordance with the Commission's Regulations. The licensee shall report under oath to the Commission at the conclusion of the tests as to the observations reported by amateur licensees in relation to the reported violation. Such reports shall include a statement as to the corrective measures taken to insure compliance with the Regulations.

12.154. *Third notice of same violation.* In every case where an amateur station licensee is cited the third time within a year for the same violation as indicated in Section 12.153, the Commission will direct that the station remain silent from 8 A.M. to 12 midnight, local time, except for the purpose of transmitting a prearranged test to be observed by a monitoring station of the Commission to be designated in each particular case. Upon completion of the test the station shall again remain silent during these hours until authorized by the Commission to resume full-time operation. The Commission will consider the results of the tests and the licensee's past record in determining the advisability of suspending the operator license and/or revoking the station license.

12.155. *Operation in emergencies.* In the event of widespread emergency conditions affecting domestic communication facilities, the Commission may confer with representatives of the amateur service and others and, if deemed advisable, will declare that a state of general communications emergency exists, designating the licensing area or areas concerned (in general not exceeding 1000 miles from center of the affected area), whereupon it shall be incumbent upon each amateur station in such area or areas to observe the following restrictions for the duration of such emergency:

(a) No transmissions except those relating to relief work or other emergency service such as amateur nets can afford, shall be made within the 1750–2050 kilocycle or 3500–4000 kilocycle amateur bands. Incidental calling, testing, or working, including casual conversation or remarks not pertinent or necessary to constructive handling of the general situation shall be prohibited.

(b) The frequencies 2025–2050, 3500–3525, and 3975–4000 kilocycles shall be reserved for emergency calling channels, for initial calls from isolated stations or first calls concerning very important emergency relief matters or arrangements. All stations having occasion to use such channels shall, as quickly as possible, shift to other frequencies for carrying on their communications.

(c) A five-minute listening period for the first five minutes of each hour shall be observed for initial calls of major importance, both in the designated emergency calling channels and throughout the 1750–2050 and 3500–4000 kilocycle bands. Only stations isolated or engaged in handling official traffic of the highest priority may continue with transmissions in these listening periods, which must be accurately observed. No replies to calls or resumption of routine traffic shall be made in the five-minute listening period.

(d) The Commission may designate certain amateur stations to assist in promulgation of its emergency announcement, and for policing the 1750–2050 and 3500–4000 kilocycle bands and warning non-complying stations noted operating therein. The operators of these observing stations shall report fully the identity of any stations failing, after due notice, to comply with any section of this regulation. Such designated stations will act in an advisory capacity when able to provide information on emergency circuits. Their policing authority is limited to the transmission of information from responsible official sources, and full reports of non-compliance which may serve as a basis for investigation and action under Section 502 of the Communications Act. Policing authority extends only to 1750–2050 and 3500–4000 kilocycle bands. Individual policing transmissions shall refer to this Section by number, shall specify the date of the Commission's declaration, the area and nature of the emergency, all briefly and concisely. Policing-observer stations shall not enter into discussions beyond essentials with the stations notified, or other stations.

(e) These special conditions imposed under this Section will cease to apply only after the Commission shall have declared such emergency to be terminated.

12.156. *Obscenity, indecency, profanity.* No licensed radio operator or other person shall transmit communications containing obscene, indecent, or profane words, language, or meaning.

12.157. *False signals.* No licensed radio operator shall transmit false or deceptive signals or communications by radio, or any call letter or signal which has not been assigned by proper authority to the radio station he is operating.

12.158. *Unidentified communications.* No licensed radio operator shall transmit unidentified radio communications or signals.

12.159. *Interference.* No licensed radio operator shall willfully or maliciously interfere with or cause interference to any radio communication or signal.

12.160. *Damage to apparatus.* No licensed radio operator shall willfully damage, or cause or permit to be damaged, any radio apparatus or installation in any licensed radio station.

12.161. *Fraudulent licenses.* No licensed radio operator or other person shall obtain or attempt to obtain, or assist another to obtain or attempt to obtain, an operator license by fraudulent means.

TEMPORARY FCC ORDERS

ORDER NO. 72 (Foreign contacts prohibited)

(Effective until further order of FCC)

At a meeting of the Federal Communications Commission held at its offices in Washington, D. C., on the fourth day of June, 1940:

Pursuant to authority contained in Sec. 303 of the Communications Act of 1934, and in accordance with Article 8, Sec. 1, General Radio Regulations (Cairo Revision, 1938) annexed to the International Telecommunications Convention (Madrid, 1934),

IT IS ORDERED, That amateur radio operators and amateur radio stations licensed by the Federal Communications Commission shall not exchange communications with operators or radio stations of any foreign government or located in any foreign country; Provided, however, that this Order is not intended to prohibit the exchange of communications between licensed amateur operators and licensed amateur stations in the continental United States and licensed amateur operators and licensed amateur stations in the several Territories and possessions of the United States, or between licensed amateur operators and licensed amateur stations in the Continental United States and United States citizens authorized to operate amateur stations in the Philippine Islands or the Canal Zone, or between licensed amateur operators and licensed amateur stations in the several Territories and possessions of the United States.

IT IS FURTHER ORDERED, That all Rules and Regulations of the Commission inconsistent with this Order, BE, AND THE SAME ARE HEREBY, SUSPENDED, pending the further Order of the Commission.

This Order shall become effective immediately.

BY THE COMMISSION
T. J. Slowie, Secretary

ORDER NO. 73 (Portable operation)

(Effective, as modified by Order 73-A and interpretation mentioned below, until further order of FCC)

At a meeting of the Federal Communications Commission held at its offices in Washington, D. C., on the seventh day of June, 1940.

Pursuant to authority contained in Section 303 of the Communications Act of 1934, as amended,

IT IS ORDERED, That portable and portable-mobile radio station operation by licensed amateur operators and stations BE, AND THE SAME IS HEREBY, PROHIBITED, pending the further Order of the Commission; Provided that licensed portable and portable-mobile amateur stations may operate on frequencies above 56,000 kilocycles at locations within the continental United States, its Territories and possessions, and Provided further that during the period of the American Radio Relay League field day tests, June 22–23, 1940, this Order shall not apply

to communications transmitted by licensed portable and portable-mobile amateur stations participating in such tests.

IT IS FURTHER ORDERED, That all Rules and Regulations of the Commission inconsistent with this Order BE, AND THE SAME ARE HEREBY, SUSPENDED, pending the further Order of the Commission.

This Order shall become effective immediately.

FEDERAL COMMUNICATIONS COMMISSION
T. J. Slowie, Secretary

ORDER No. 73-A (Portable operation)

At a meeting of the Federal Communications Commission held in its offices in Washington, D. C., on the 11th day of June, 1940:

IT IS ORDERED, That Commission Order No. 73 dated on the seventh day of June, 1940, BE, AND THE SAME IS HEREBY, AMENDED by adding to the first ordering paragraph thereof the following: "It is further provided that this order shall not apply to the operation of licensed portable and portable-mobile amateur stations (1) actually engaged in supplying or attempting to supply domestic communication in the public interest during a bona-fide communications emergency when normal facilities are inadequate or non-existent, or (2) actually engaged in the domestic testing and developing of self-powered portable and portable-mobile equipment intended for use in domestic communications emergencies, during the hours between sunrise and sunset, local time, on Saturdays and Sundays of each week, provided notice of such testing and developing operation shall have been given at least 48 hours in advance to the Federal Communications Commission Inspector in Charge of the district in which such operation is contemplated."

This order shall become effective immediately.

FEDERAL COMMUNICATIONS COMMISSION
T. J. Slowie, Secretary

ORDER NO. 75 (Proof of citizenship required)

(Effective until further order of the FCC)

At a meeting of the Federal Communications Commission held at its offices in Washington, D. C., on the 18th day of June, 1940.

Pursuant to authority contained in the Communications Act of 1934, as amended,

IT IS ORDERED, That on or before the 15th day of August 1940, each radio operator who holds an outstanding commercial or amateur radio operator license issued by this Commission, shall file with the Commission his response, under oath, to the attached questionnaire (Form No. 735) and shall furnish the additional data and documents required therein;

IT IS FURTHER ORDERED, That on and after the date of this Order, each application for a new commercial or amateur radio operator license shall be accompanied by the applicant's response, under oath, to the attached questionnaire (Form No. 735) together with the additional data and documents required therein;

IT IS FURTHER ORDERED, That on and after the date of this Order, each application for a renewal of a commercial or amateur radio operator license shall be accompanied by the applicant's response to the attached questionnaire (Form No. 735), together with the additional data and documents required therein; Provided, however, that such response need not be submitted with a renewal application if a response previously has been made pursuant to the first ordering paragraph herein.

This Order shall become effective immediately.

FEDERAL COMMUNICATIONS COMMISSION
T. J. Slowie, Secretary

ORDER NO. 77 (Proof of use suspended)

(Effective only until January 1, 1942)

The Commission having under consideration its Rules Governing Amateur Radio Stations and Operators and its Rules Governing Commercial Radio Operators, with particular reference to the provisions concerning renewals; and

IT APPEARING, that present conditions render it difficult for commercial radio operators and for amateur radio station licensees and operators to make the showing of service or use required for renewal of license; and that such difficulty will be accentuated in many instances due to military service:

IT IS ORDERED, that Sections 12.26 and 12.66 of the Rules Governing Amateur Radio and Section 13.28 of the Rules Governing Commercial Radio Operators, in so far as the required showing of service or use of license is concerned, BE, AND THEY ARE HEREBY, SUSPENDED until further order of the Commission, but in no event beyond January 1, 1942.

This Order shall take effect on the 4th day of December 1940.

FEDERAL COMMUNICATIONS COMMISSION
John B. Reynolds, Acting Secretary

ORDER NO. 81 (Renewal of licenses, armed forces)

(Effective until further order of FCC)

At a session of the Federal Communications Commission held at its offices in Washington, D. C., on the 27th day of May, 1941.

The Commission having under consideration its Rules of Practice and Procedure and its Rules Governing Amateur Radio: Stations and Operators, with particular reference to the provisions concerning applications for renewal of license; and

IT APPEARING, that service with the armed forces of the Nation renders it difficult for many amateur radio operator and station licenses to comply with the formal requirements of the Commission's rules relative to the filing of applications for renewal of license:

IT IS ORDERED that until further order of the Commission amateur radio operator and station licensees, serving with the armed forces of the Nation, who desire to renew outstanding licenses may submit to the Commission by letter, an informal application for renewal in lieu of the formal application required by the Commission's rules;

PROVIDED, HOWEVER, that such informal application for renewal by letter must set forth the fact that the applicant is serving with the armed forces of the Nation and must be accompanied by a signed statement of the applicant's immediate commanding officer verifying that fact.

This Order shall become effective immediately.

FEDERAL COMMUNICATIONS COMMISSION
T. J. Slowie, Secretary

TEMPORARY LOAN OF FREQUENCIES

On July 22, 1941, the Commission gave notice of its intention to take action over the next few months that will temporarily restrict amateur operation within the continental U. S. on the frequencies from 3650 to 3950 kc., to make them available for the vast military aircraft pilot training program being established throughout the U. S. This action is to take the form of a series of orders releasing the frequencies in question as required.

In order to provide maximum facilities for various types of amateur work under these temporary changes, the Commission is also rearranging certain other amateur allocations, particularly with respect to the radiotelephone sub-bands.

The first order under the plan follows:

At a meeting of the Federal Communications Commission held in its offices in Washington, D. C., on the 22nd day of August, 1941;

The Commission having under consideration its rules governing Amateur Radio Stations and Operators with particular reference to the matter of temporary withdrawal of certain frequencies from the amateur service; and

IT APPEARING that a hearing on the above-entitled matter was held on August 18, 1941, at which time an opportunity was afforded any party affected thereby to protest the temporary withdrawal of such frequencies from the Amateur Service for the training of military airplane pilots, will serve the public interest, convenience and necessity; therefore,

IT IS ORDERED that Sections 12.111 and 12.115 of Part 12 of the Rules and Regulations of the Commission, insofar as they pertain to the continental limits of the United States, BE, AND THEY ARE HEREBY, SUSPENDED UNTIL FURTHER ORDER OF THE COMMISSION;

IT IS FURTHER ORDERED that the following Tem-

porary Rules Governing Amateur Radio Stations be effective during the period of the suspension of the foregoing sections;

Temporary Rule 12.111. *Frequencies for exclusive use of amateur stations.* — The following bands of frequencies are allocated exclusively for use by amateur stations subject to change with respect to 3650–3800 kilocycles and 3900–3950 kilocycles upon further order of the Commission:

1750 to 2050 kilocycles
3500 to 3800 kilocycles
3900 to 4000 kilocycles
7000 to 7300 kilocycles
14000 to 14400 kilocycles
28000 to 30000 kilocycles
56000 to 60000 kilocycles
112000 to 116000 kilocycles
224000 to 230000 kilocycles
400000 to 401000 kilocycles

Provided, however, that amateur licensees located in the states of Maine, New Hampshire, Vermont, Massachusetts, Rhode Island, Connecticut, New York, New Jersey, Pennsylvania, Delaware, Maryland, District of Columbia, Ohio, Michigan, Indiana, Illinois, Wisconsin, Minnesota, Iowa, North Dakota, South Dakota, Wyoming, Montana, Idaho, Oregon, and Washington, may use the frequencies in the band 3800–3900 kilocycles for Type A-1 emission during the period between two hours after local sunrise and two hours before local sunset subject to the condition that no interference is caused to government operation on these frequencies. The privilege conferred by this proviso with respect to any amateur or to the amateurs within any area may be terminated at any time without advance notice or hearing should interference develop.

Temporary Rule 12.115. *Additional bands for types of emission using amplitude modulation.* — The following bands of frequencies are allocated for use by amateur stations using additional types of emission as shown:

1750 to	1900 kilocycles	—	—	A-4	—
1900 to	2050 kilocycles	—	A-3	—	—
7250 to	7300 kilocycles	—	A-3	—	—
28100 to	30000 kilocycles	—	A-3	—	—
56000 to	60000 kilocycles	A-2	A-3	A-4	—
112000 to	116000 kilocycles	A-2	A-3	A-4	A-5
224000 to	230000 kilocycles	A-2	A-3	A-4	A-5
400000 to	401000 kilocycles	A-2	A-3	A-4	A-5

This order shall take effect on the 20th day of December, 1941; *Provided, however,* That should need therefor arise, the Commission may, by subsequent order, advance the effective date hereof to a date prior to December 20, 1941, but not less than thirty (30) days from the date of this action.

FEDERAL COMMUNICATIONS COMMISSION
T. J. Slowie, Secretary

These temporary rules have the effect of vacating 3800–3900 kc. as the first step under the plan. Simultaneously they reduce the 160-meter 'phone band to 1900–2050 kc. but open a new 'phone band, 7250–7300 kc.

Two future orders are contemplated to complete the transfer of frequencies in the 3650–3950 kc. region. Dates are uncertain, but one, probably effective in early 1942, is expected to vacate 3750–3800 and 3900–3950 kc. The last order, probably effective in March or April, 1942, is expected to vacate 3650–3750 kc. Amateurs are required to keep themselves informed of these changes as they occur.

None of the orders here mentioned is actual changes in the regulations; the regulations remain the same but these orders temporarily affect the operation of some of them. Amateurs should read *QST* each month to keep posted on modification of the above orders, or details of any new ones.

U. S. Radio Districts

District	*Territory*	*Address, Radio Inspector-in-Charge*
No. 1	The States of Connecticut, Maine, Massachusetts, New Hampshire, Rhode Island and Vermont.	Customhouse, Boston, Mass.
No. 2	The counties of Albany, Bronx, Columbia, Delaware, Dutchess, Greene, Kings, Nassau, New York, Orange, Putnam, Queens, Rensselaer, Richmond, Rockland, Schenectady, Suffolk, Sullivan, Ulster and Westchester of the State of New York; and the counties of Bergen, Essex, Hudson, Hunterdon, Mercer, Middlesex, Monmouth, Morris, Passaic, Somerset, Sussex, Union and Warren of the State of New Jersey.	748 Federal Bldg., 641 Washington St., New York, N. Y.
No. 3	The counties of Adams, Berks, Bucks, Carbon, Chester, Cumberland, Dauphin, Delaware, Lancaster, Lebanon, Lehigh, Monroe, Montgomery, Northampton, Perry, Philadelphia, Schuylkill and York of the State of Pennsylvania; and the counties of Atlantic, Burlington, Camden, Cape May, Cumberland, Gloucester, Ocean and Salem of the State of New Jersey; and the county of Newcastle of the State of Delaware.	1200 New U. S. Customhouse, Second and Chestnut Sts., Philadelphia, Pa.
No. 4	The State of Maryland; the District of Columbia; the counties of Arlington, Clark, Fairfax, Fauquier, Frederic, Loudoun, Page, Prince William, Rappahannock, Shenandoah and Warren of the State of Virginia; and the counties of Kent and Sussex of the State of Delaware.	Fort McHenry, Baltimore, Md.
No. 5	The State of Virginia except that part lying in District 4, and the State of North Carolina except that part lying in District 6.	402 New Post Office Bldg., Norfolk, Va.
No. 6	The States of Georgia, South Carolina, and Tennessee; and the counties of Ashe, Avery, Buncombe, Burke, Caldwell, Cherokee, Clay, Cleveland, Graham, Haywood, Henderson, Jackson, McDowell, Macon, Madison, Mitchell, Polk, Rutherford, Swain, Transylvania, Watauga and Yancey of the State of North Carolina; and the State of Alabama except that port lying in District 8.	411 Federal Annex, Atlanta, Ga.
No. 7	The State of Florida except that part lying in District 8.	312 Federal Bldg., Miami, Fla.
No. 8	The States of Arkansas, Louisiana and Mississippi; and the city of Texarkana in the State of Texas; the county of Escambia in the State of Florida; the counties of Mobile and Baldwin in the State of Alabama.	308 Customhouse, New Orleans, La.
No. 9	The counties of Aransas, Brazoria, Brooks, Calhoun, Cameron, Chambers, Fort Bend, Galveston, Goliad, Harris, Hidalgo, Jackson, Jefferson, Jim Wells, Kenedy, Kleberg, Matagorda, Nueces, Refugio, San Patricio, Victoria, Wharton and Willacy of the State of Texas.	404 Federa /Bldg., Galveston, Tex.
No. 10	The State of Texas except that part lying in District 9 and in the city of Texarkana; and the States of Oklahoma and New Mexico.	500 U. S. Terminal Annex Bldg. Dallas, Tex.
No. 11	The State of Arizona; the county of Clarke in the State of Nevada; and the counties of Imperial, Inyo, Kern, Los Angeles, Orange, Riverside, San Bernardino, San Diego, San Luis Obispo, Santa Barbara and Ventura of the State of California.	539 U. S. Post Office & Courthouse Bldg., Los Angeles, Calif.
No. 12	The State of California except that part lying in District 11; the State of Nevada except the county of Clarke; Guam, Wake, Midway, Am. Samoa.	328 Customhouse, San Francisco, Calif.
No. 13	The State of Oregon; and the State of Idaho except that part lying in District 14; and the counties of Wahkiakum, Cowlitz, Clark, Skamania and Klickitat of the State of Washington.	805 Terminal Sales Bldg., 1220 S. W Morrison St., Portland, Ore.
No. 14	The State of Montana; the State of Washington except that part lying in District 13; and the counties of Benewah, Bonner, Boundary, Clearwater, Idaho, Kootenai, Latah, Lewis, Nez Perce and Shoshone of the State of Idaho.	808 Federal Office Building, Seattle, Wash.
No. 15	The States of Colorado, Utah and Wyoming.	504 Customhouse, Denver, Colo.
No. 16	The States of North Dakota, South Dakota and Minnesota; the counties of Alger, Baraga, Chippewa, Delta, Dickinson, Gogebic, Houghton, Iron, Keweenaw, Luce, Mackinac, Marquette, Menominee, Ontonagon and Schoolcraft of the State of Michigan; and the State of Wisconsin except that part lying in District 18.	208 Uptown P. O. & Federal Courts Bldg., St. Paul, Minn.
No. 17	The States of Nebraska, Kansas and Missouri; and the State of Iowa except that part lying in District 18.	809 U. S. Courthouse, Kansas City, Mo.
No. 18	The States of Indiana and Illinois; the counties of Allamakee, Buchanan, Cedar, Clayton, Clinton, Delaware, Des Moines, Dubuque, Fayette, Henry, Jackson, Johnson, Jones, Lee, Linn, Louisa, Muscatine, Scott, Washington and Winneshiek of the State of Iowa; the counties of Columbia, Crawford, Dane, Dodge, Grant, Green, Iowa, Jefferson, Kenosha, Lafayette, Milwaukee, Ozaukee, Racine, Richland, Rock, Sauk, Walworth, Washington and Waukesha of the State of Wisconsin.	246 U. S. Courthouse Bldg., Chicago, Ill.
No. 19	The State of Michigan except that part lying in District 16; the States of Ohio, Kentucky and West Virginia.	1025 New Federal Bldg., Detroit, Mich.
No. 20	The State of New York except that part lying in District 2, and the State of Pennsylvania except that part lying in District 3.	518 Federal Building, Buffalo, N. Y.
No. 21	The Territory of Hawaii.	Aloha Tower, Honolulu, T. H.
No. 22	Puerto Rico and the Virgin Ids.*	322 Federal Bldg., San Juan, P. R.
No. 23	The Territory of Alaska*	7 Shattuck Bldg., Juneau.

* Amateur applicants in Alaska and the Virgin Ids. are not required to take the *Class B* test but may apply for *Class C*

To Handbook Readers

WHO ARE NOT

A.R.R.L. MEMBERS

Amateur Radio of To-day Is the Result of the Efforts of A.R.R.L.

FOR TWENTY-SEVEN YEARS the A.R.R.L. has been the organized body of amateur radio, its representative in this country and abroad, its champion against attack by foreign government and American commercial, its leader in technical progress.

To save yourself 50c a year (newsstand copies of *QST* cost $3).

To be sure of getting your copy of *QST* first.

To be sure of getting your copy of *QST* (newsstands are often sold out).

To be eligible for appointment or election to A.R.R.L. offices.

To be eligible to sign petitions for your Director, your representative on the A.R.R.L. Board.

To be eligible to vote for Director and Section Comm. Manager (only A.R.R.L. members receive ballots).

To lend the strength of your support to the organization which represents YOU at all important radio conferences.

To have YOUR part in the A.R.R.L., which has at heart the welfare of all amateurs.

A bona fide interest in amateur radio is the only essential requirement but full voting membership is granted only to licensed radio amateurs of the United States and Canada. Therefore, if you have a license, please be sure to indicate it below.

JOIN THE LEAGUE!

AMERICAN RADIO RELAY LEAGUE, West Hartford, Conn., U.S.A.

Being genuinely interested in Amateur Radio, I hereby apply for membership in the American Radio Relay League, and enclose $2.50 ($3.00 in foreign countries) in payment of one year's dues, $1.25 of which is for a subscription to *QST* for the same period. Please begin my subscription with the.....issue.

The call of my station is.....The class of my operator's license is.....

I belong to the following radio societies.....

.....

Send my Certificate of Membership ☐ or Membership Card ☐ (indicate which) to the address below:

Name.....

.....

To Handbook Readers Who Are Already A.R.R.L. Members

FOR members who hold amateur licenses, who are interested in radio activities and Communications Department operating work (explained fully, Chapter 31), here is an application blank which may be filled out for appointment as either Official Relay Station (for telegraphing members) or Official Phone Station (for voice operated member-stations). Copy this, or cut and fill it out, and send it direct to your Section Communications Manager (address in *QST*) or to A.R.R.L. Headquarters, 38 LaSalle Road, West Hartford, Connecticut, for routing to the proper S.C.M. for attention if you are interested.

The Communications Department field organization includes only the United States and its territories, and Canada, Newfoundland, Labrador, Cuba, and the Philippine Islands. Foreign applications, that is, those from outside these areas, cannot be handled.

APPLICATION FOR APPOINTMENT AS OFFICIAL.....STATION
(RELAY OR PHONE?)

To: **Section Communications Manager.....Section, A.R.R.L.**

Name .....*Call*.....

Street and Number.....*Date*.....

City.....*State*.....*County*.....

Transmitting frequencies:..... *kilocycles*

My membership in the A.R.R.L. expires.....
MONTH YEAR

IN MAKING APPLICATION FOR APPOINTMENT AS OFFICIAL RELAY STATION, I AGREE:

——to obey the radio communication laws and regulations of the country under which this station is licensed, particularly with respect to quiet hours and observance of our frequency allocations.

——to send monthly reports of station activities to the Section Communications Manager under whose jurisdiction this station comes.

——to handle messages in accordance with good operating procedure, delivering messages within forty-eight (48) hours when possible, mailing to destination whenever impossible to relay to the next station in line within a 48-hour period.

——to participate in every A.R.R.L. communication activity to the best of my ability, always trying to live up to those ideals set forth in "The Amateur's Code."

IN MAKING APPLICATION FOR APPOINTMENT AS OFFICIAL PHONE STATION, I AGREE:

——to obey the radio communication laws of the country under which my station is licensed, particularly with respect to the regulations governing quiet hours and frequencies.

——to send monthly reports of station activities to the Section Communications Manager under whose jurisdiction this station comes; to use such operating procedure as may be adopted by the O.P.S. group; to test outside busy operating hours or using dummy antennas.

——to handle such messages as may come to me, as accurately, promptly and reliably as possible.

——to participate in all amateur communication activities to the best of my ability, always trying to live up to those ideals set forth in "The Amateur's Code" and to carry on amateur operation in a constructive and unselfish spirit.

——to use circuits and adjustments that avoid frequency modulation and over modulation by proper transmitter adjustment (accomplished by use of proper indicating devices) to avoid causing interference unnecessarily.

I understand that this appointment requires annual endorsement, and also may be suspended or cancelled at the discretion of the Section Communications Manager for violation of the agreement set forth above

PLEASE SEND DETAILED FORMS TO SUBMIT IN CONNECTION WITH THIS APPLICATION

Signed .....

The Catalog Section

☆ ☆ ☆

In the following pages is a catalog-file of products of the principal manufacturers who serve the short-wave field. Appearance in these pages is by invitation—space has been sold only to those dependable firms whose established integrity and whose products have met with the approval of the American Radio Relay League.

INDEX OF MANUFACTURERS

★ CATALOG SECTION ★

The Radio Amateur's Handbook

	Page
Aerovox Corporation	81
American Lava Corporation	73
American Phenolic Corporation	37
A.R.R.L.	83–92
A.R.R.L. Bookshelf	93
Astatic Corporation, The	79
Barker & Williamson	64, 65
Birnbach Radio Co., Inc.	48
Bliley Electric Company	34, 35
Burgess Battery Company	36
Candler System Company	45
Centralab	41
Clarostat Mfg. Company, Inc.	77
Cornell-Dubilier Electric Corporation	28, 29
Corning Glass Works	40
Echophone Radio Company	71
Eitel-McCullough, Inc.	47
Gardiner-Levering Company	82
General Electric Company	50, 51
Hallicrafters Company, The	20–27
Hammarlund Mfg. Company, Inc.	54, 55
Heintz & Kaufman, Ltd.	60
Hewlett Packard Company	76
Howard Radio Company	49
Hytronic Laboratories	80
Instructograph Company	61
International Resistance Company	31
Johnson Company, E. F.	58, 59
Kenyon Transformer Company, Inc.	56
Mallory & Company, Inc., P. R.	38, 39
McElroy, T. R.	32, 33
Meissner Mfg. Company	57
Millen Mfg. Company, Inc., James	42, 43
National Company, Inc.	1–19
Ohmite Mfg. Company	66, 67
Par-Metal Products Corporation	44
Premax Products	70
RCA Mfg. Company, Inc.	68, 69
Radio Mfg. Engineers, Inc.	63
Raytheon Production Corporation	74
Shure Brothers	75
Solar Mfg. Corporation	62
Sprague Products Company	46
Struthers Dunn, Inc.	53
Teleplex Company	72
United Transformer Corporation	52
Vibroplex Company, Inc., The	30

NATIONAL RADIO PRODUCTS

1942

A COMPLETE LINE

	PAGE
Dials and Knobs	2
Condensers	3–8
Couplings	9
Coils and Chokes	9–12
Shields	12
Cabinets	12
Oscilloscopes	13
Plate and Grid Grips	14
Sockets	14, 15
Insulators	14, 15
Receivers	16–18
Amplifiers and Modulators	19
Transmitters	19

NATIONAL CO., INC.
MALDEN, MASS.
U. S. A.

NATIONAL DIALS

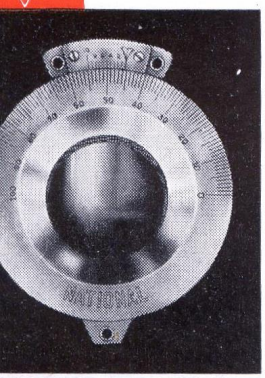

The four-inch N Dial has an engine divided scale and vernier. The vernier is flush with the scale. The planetary drive has a ratio of 5 to 1, and is contained within the body of the dial. 2, 3, 4 or 5 scale. Fits 1/4" shaft. **Specify scale.**

N Dial **List $7.50**

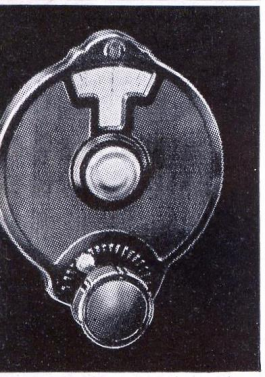

"Velvet Vernier" Dial, Type B, has a compact variable ratio 6 to 1 minimum, 20 to 1 maximum drive that is smooth and trouble free. An illuminator is available. The case is black bakelite. 1 or 5 scale. 4" diam. Fits 1/4" shaft. **Specify scale.**

B Dial **List $3.00**
Illuminator, extra **List $.55**

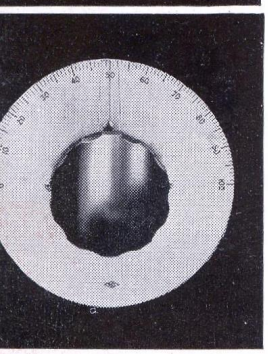

The new National Dial Type AL has a transparent index pointer travelling over an accurately graduated dial 5" in diameter. The drive is through a Type A mechanism with 5 to 1 ratio. Fits 1/4" shaft. **Scale 3 only.**

AL Dial **List $5.00**

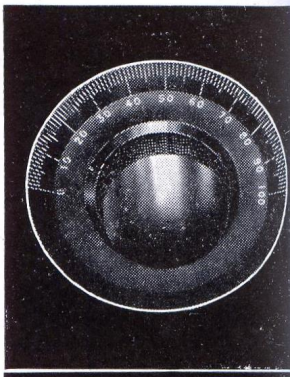

The original black bakelite "Velvet Vernier" Dial, Type A, is still an unchallenged favorite for general purpose use. The planetary drive has a ratio of 5 to 1. In 4 inch diameter with 2, 4 or 5 scale, and in 3 3/8 inch diameter with 2 scale. Fits 1/4" shaft. **Specify scale.**

A Dial **List $3.30**

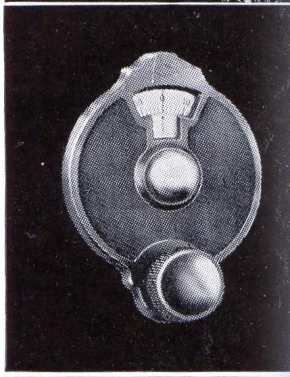

The BM Dial is a smaller version of the B Dial (described in the opposite column) for use where space is limited. The drive ratio is fixed. Although small in size, the BM Dial has the same smooth action as the larger units. 1 or 5 scale. 3" diam. Fits 1/4" shaft. **Specify scale.**

BM Dial **List $2.75**

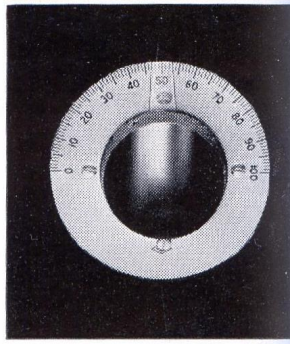

The new National Dial Type AO is similar to the AL Dial in the opposite column, but is only 3 1/2" in diameter. It employs the same smooth Type A mechanism, and has a transparent index. Fits 1/4" shaft. **Scale 3 only.**

AO Dial **List $4.00**

All prices subject to change without notice

INEXPENSIVE DIALS

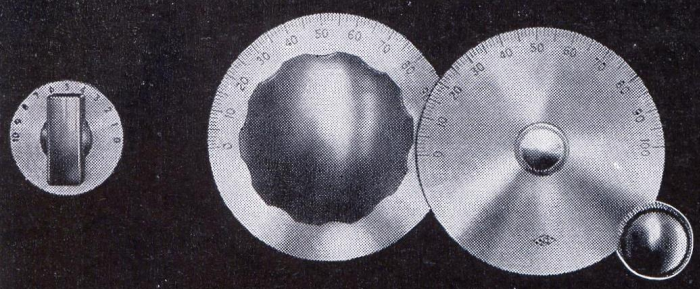

TYPE R
List $ .85
1 5/8" Dia.
Etched Nickel Silver

TYPE O
List $1.65
3 1/2" Dia.

TYPE K
List $1.65
3 1/2" Dia.

TYPE L
List $2.75
5" Dia.

TYPE M
List $2.75
5" Dia.

NEW! FOR INDIVIDUAL CALIBRATING

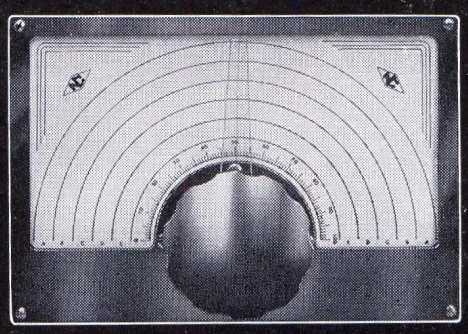

For experimenters who "build their own" and desire direct calibration. Fine for Freq. Monitors and ECO's.

- Dial bezel size 5" x 7 1/4"
- Five blank scales for direct calibration
- Employs Velvet Vernier Drive
- Easy to mount

TYPE ACN List $5.00

KNOBS

R Dial scale 3 only; O, K, L, M scale 2. All fit 1/4" shafts.



HRK (Fits 1/4" shaft) **List $.95**
Black bakelite knob 2 3/8" diam.

HRP-P (Fits 1/4" shaft) **List $.40**
Black bakelite knob 1 1/4" long and 1/2" wide. Equipped with pointer.

HRP **List $.30**
The Type HRP knob has no pointer, but is otherwise the same as the knob above.

DIAL SCALES

Scale	Divisions	Rotation	Direction of Condenser Rotation for increase of dial reading
1	0-100-0	180°	Either
2	0-100	180°	Counter Clockwise
3	100-0	180°	Clockwise

ACCESSORIES

ODL **List $.55**
A locking device which clamps the rim of O, K, L and M Dials. Brass, nickel plated.

ODD **List $.70**
Vernier drive for O, K, L, M or other plain dials.

SB (Fits 1/4" shaft) **List $.30**
A nickel plated brass bushing 3/8" dia.

RSL (Fits 1/4" shaft) **List $.95**
Rotor Shaft Lock for TMA, TMC and similar condensers.



NATIONAL PRECISION CONDENSERS

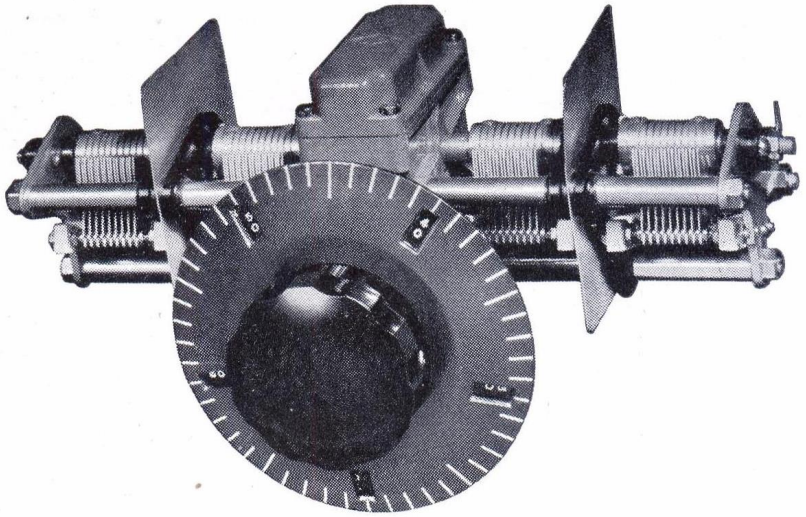

The Micrometer dial reads direct to one part in 500. Division lines are approximately 1/4" apart. The dial revolves ten times in covering the tuning range, and the numbers visible through the small windows change every revolution to give consecutive numbering by tens from 0 to 500. The condenser is of extremely rigid construction, with four bearings on the rotor shaft. The drive, at the mid-point of the rotor, is through an enclosed preloaded worm gear with 20 to 1 ratio. Each rotor is individually insulated from the frame, and each has its own individual rotor contact. Stator insulation is Steatite. Plate shape is straight-line-frequency when the frequency range is 2:1.

PW Condensers are available in 2, 3 or 4 sections, in either 160 or 225 mmf per section. Larger capacities cannot be supplied.

A single-section PW condenser with grounded rotor is supplied in capacities of 150, 200, 350 and 500 mmf, single spaced, and capacities up to 125 mmf, double spaced.

PW condensers are all with rotor shaft parallel to the panel.

PW-1R	Single section right	**List $16.50**
PW-1L	Single section left	**List $16.50**
PW-2R	Double section right	**List $22.00**
PW-2L	Double section left	**List $22.00**
PW-2S	Single section each side	**List $22.00**
PW-3R	Double section right; single left	**List $26.50**
PW-3L	Double section left; single right	**List $26.50**
PW-4	Double section each side	**List $30.00**

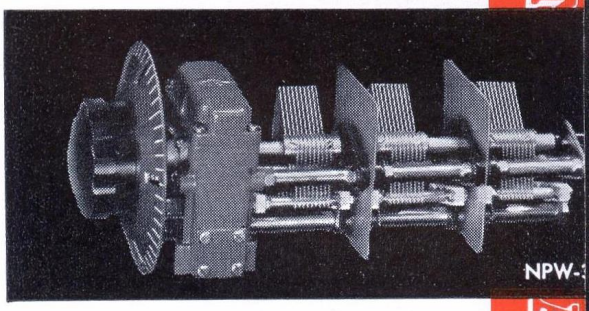

NPW MODELS

With micrometer dial

NPW-3. Three sections, each 225 mmf. **List $26.50**

NPW-X. Three sections, each 25 mmf. **List $22.50**

Both condensers are similar to PW models, except that rotor shaft is perpendicular to panel.

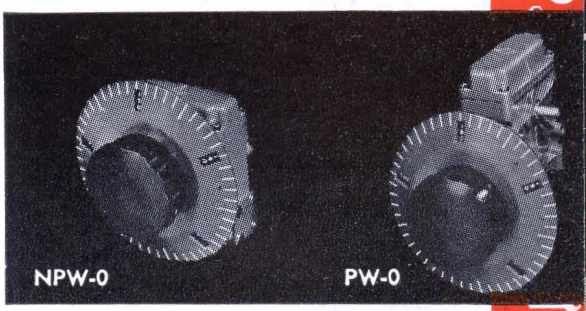

GEAR DRIVE UNITS

With micrometer dial

NPW-O **List $12.00**

Uses parts similar to the NPW condenser. Drive shaft perpendicular to panel. One TX-9 coupling supplied.

PW-O **List $15.00**

Uses parts similar to the PW condenser. Drive shaft parallel to panel. Two TX-9 couplings supplied.

NATIONAL GENERAL PURPOSE CONDENSERS

National EMC Condensers are made in large sizes for general purpose uses. They are similar in construction to the TMC Transmitting condenser, and have high efficiency and rugged frames. Insulation is Isolantite, and Peak Voltage Rating is 1000 Volts. Plate shape is Straight-Line Wavelength.

Capacity	Minimum Capacity	No. of Plates	Length	Catalog Symbol	List
150 Mmf.	9	9	4"	EMC-150	$3.75
250	11	14	2 15/16"	EMC-250	4.25
350	12	20	2 15/16"	EMC-350	4.75
500	16	27	4 3/8"	EMC-500	5.25
1000	22	55	6 3/4"	EMC-1000	8.00
SPLIT-STATOR MODEL					
350–350	12–12	20–20	6"	EMCD-350	$8.25

All prices subject to change without notice

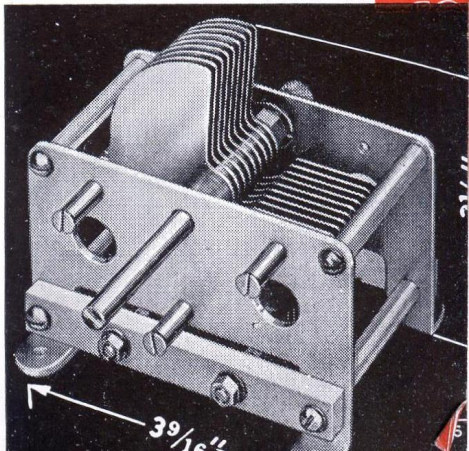

NC
AL COMP
C., MALDEN, MAS

NATIONAL RECEIVING CONDENSERS

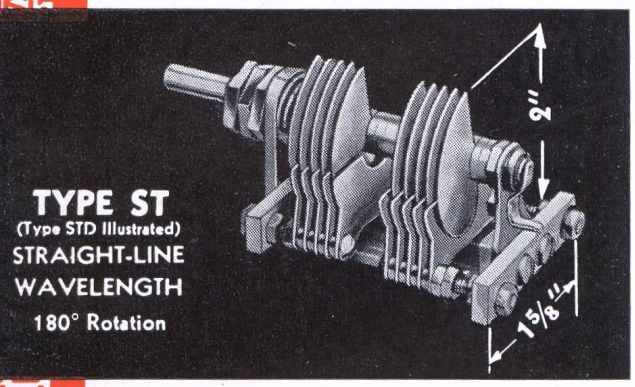

TYPE ST
(Type STD Illustrated)
STRAIGHT-LINE
WAVELENGTH
180° Rotation

Capacity	Minimum Capacity	No. of Plates	Air Gap	Length	Catalog Symbol	List
SINGLE BEARING MODELS						
15 Mmf.	3 Mmf.	3	.018"	1 3/16"	STHS- 15	$1.50
25	3.25	4	.018"	1 3/16"	STHS- 25	1.65
50	3.5	7	.018"	1 3/16"	STHS- 50	1.75
DOUBLE BEARING MODELS						
35 Mmf.	6 Mmf.	9	.026"	2 1/4"	ST- 35	$1.65
50	7	11	.026"	2 1/4"	ST- 50	2.00
75	8	15	.026"	2 1/4"	ST- 75	2.25
100	9	20	.026"	2 1/4"	ST-100	2.50
140	10	28	.026"	2 3/4"	ST-140	2.75
150	10.5	29	.026"	2 3/4"	ST-150	2.75
200	12.0	27	.018"	2 1/4"	STH-200	3.00
250	13.5	32	.018"	2 3/4"	STH-250	3.30
300	15.0	39	.018"	2 3/4"	STH-300	3.50
335	17.0	43	.018"	2 3/4"	STH-335	4.00
SPLIT STATOR DOUBLE BEARING MODELS						
50–50	5–5	11–11	.026"	2 3/4"	STD- 50	$4.00
100–100	5.5–5.5	14–14	.018"	2 3/4"	STHD-100	5.00

NOTE — Type SS Condensers, having straight-line-capacity plates but otherwise similar to the Type ST, are available. Capacities and Prices same as Type ST.

The ST Type condenser has Straight-Line Wavelength plates. All double-bearing models have the front bearing insulated to prevent noise. On special order a shaft extension at each end is available, for ganging. On double-bearing single shaft models, the rotor contact is through a constant impedance pigtail. Isolantite insulation.

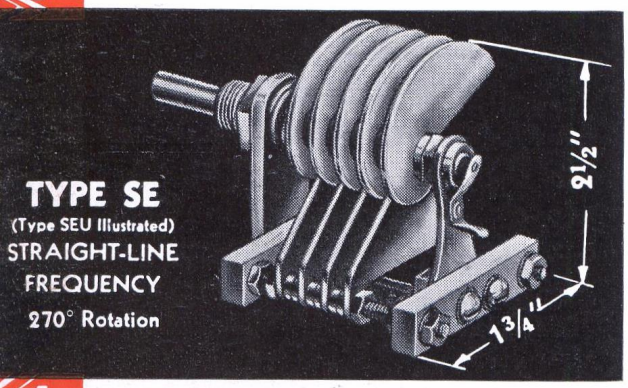

TYPE SE
(Type SEU Illustrated)
STRAIGHT-LINE
FREQUENCY
270° Rotation

Capacity	Minimum Capacity	No. of Plates	Air Gap	Length	Catalog Symbol	List
15 Mmf.	7 Mmf.	6	.055"	2 1/4"	SEU- 15	$2.75
20	7.5	8	.055"	2 1/4"	SEU- 20	3.00
25	8	9	.055"	2 1/4"	SEU- 25	3.00
50	9	11	.026"	2 1/4"	SE- 50	2.50
75	10	15	.026"	2 1/4"	SE- 75	2.75
100	11.5	20	.026"	2 1/4"	SE-100	3.00
150	13	29	.026"	2 3/4"	SE-150	3.25
200	12	27	.018"	2 1/4"	SEH-200	3.25
250	14	32	.018"	2 3/4"	SEH-250	3.50
300	16	39	.018"	2 3/4"	SEH-300	3.50
335	17	43	.018"	2 3/4"	SEH-335	3.85

TYPE SE — All models have two rotor bearings, the front bearing being insulated to prevent noise. A shaft extension at each end, for ganging, is available on special order. On models with single shaft extension, the rotor contact is through a constant impedance pigtail. The SEU models (illustrated) are suitable for high voltages as their plates are thick polished aluminum with rounded edges. Other SE condensers do not have polished edges on the plates. Isolantite insulation.

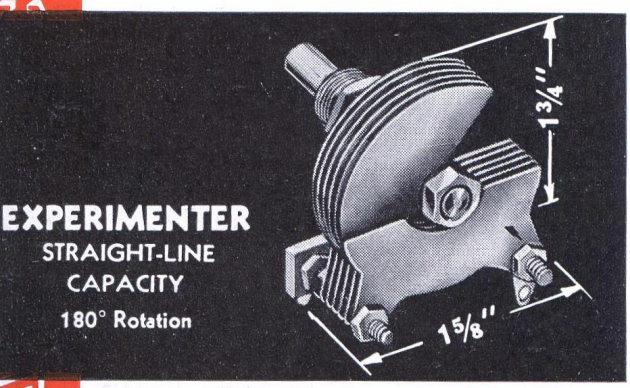

EXPERIMENTER
STRAIGHT-LINE
CAPACITY
180° Rotation

Capacity	Minimum Capacity	Length	Air Gap	No. of Plates	Catalog Symbol	List
15 Mmf.	3.5	1 5/16"	.045"	5	EX- 15	$ .95
25	3.75	1 5/16"	.045"	7	EX- 25	.95
35	3.75	1 5/16"	.045"	10	EX- 35	1.10
50	4	1 5/16"	.017"	6	EX- 50	1.00
100	4.75	1 5/16"	.017"	12	EX-100	1.10
140	5.5	1 5/16"	.017"	15	EX-140	1.40

The National "Experimenter" Type Condensers are low-priced models for general experimental work. They are of all-brass construction. The rotor has only one bearing. Plates can be removed without difficulty. Bakelite insulation.

All prices subject to change without notice

NATIONAL MINIATURE CONDENSERS

USR — *See table* — Type USR condensers are small, compact, low-loss units. Their soldered construction makes them particularly suitable for applications where vibration is present. Adjustment is made with a screw driver. Steatite base.

USE — *See table* — Type USE condensers are similar to Type USR, but are provided with a 1/4" diameter shaft extension at each end.

USL — *See table* — Type USL condensers are similar to Type USR, but are provided with a rotor shaft lock, so that the rotor can be clamped at any setting.

MSR, MSE, MSL — *See table* — Condensers of the MS series are similar in appearance to the US series described above, but they differ in making use of plates which are the same as those of the UM condenser. This and other small changes results in a more robust and rigid assembly. Other details of the MSR, MSE, and MSL are the same as the USR, USE, and USL respectively.

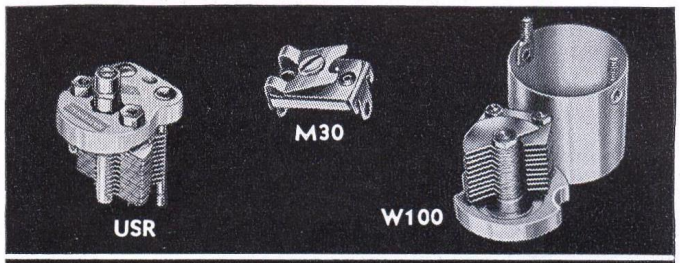

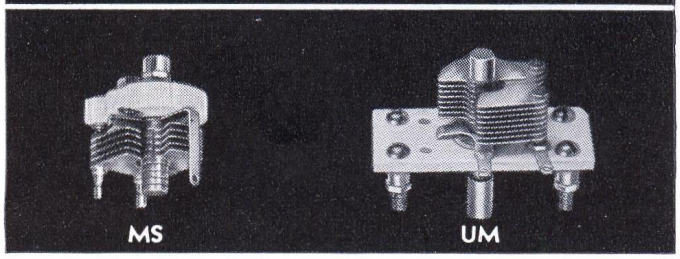

Capacity	Catalog Symbol			List
25 mmf.	USR-25	USE-25	USL-25	$1.45
50	USR-50	USE-50	USL-50	1.65
75	USR-75	USE-75	USL-75	1.90
100	USR-100	USE-100	USL-100	2.10
140	USR-140	USE-140	USL-140	2.50

Capacity	Catalog Symbol			List
25 mmf.	MSR-25	MSE-25	MSL-25	$1.45
50	MSR-50	MSE-50	MSL-50	1.65
75	MSR-75	MSE-75	MSL-75	1.90
100	MSR-100	MSE-100	MSL-100	2.10

Capacity	Minimum Capacity	No. of Plates	Air Gap	Catalog Symbol	List
15 mmf.	1.5	6	.017"	UM-15	$1.40
35	2.5	12	.017"	UM-35	1.65
50	3	16	.017"	UM-50	1.75
75	3.5	22	.017"	UM-75	1.90
100	4.5	28	.017"	UM-100	2.10
25	3.4	14	.050"	UMA-25	2.00
BALANCED STATOR MODEL					
25	2	4–4–4	.017"	UMB-25	$2.00

M-30 **List $.35**

Type M-30 is a small adjustable mica condenser with a maximum capacity of 30 mmf. Dimensions $\frac{13}{16}$" x $\frac{9}{16}$" x $\frac{1}{2}$". Isolantite base.

W-75, 75 mmf. **List $2.50**

W-100, 100 mmf. **List $2.75**

Small padding condensers having very low temperature coefficient. Mounted in an aluminum shield 1 1/4" in diameter.

The **UM CONDENSER** is designed for ultra high frequency use and is small enough for convenient mounting in PB-10 and RO shield cans. They are particularly useful for tuning receivers, transmitters, and exciters. Shaft extensions at each end of the rotor permit easy ganging when used with one of our flexible couplings. The UMB-25 Condenser is a balanced stator model, two stators act on a single rotor. The UM can be mounted by the angle foot supplied or by bolts and spacers. See table for sizes.

Dimensions: Base 1" x 2 1/4", Mounting holes 5/8" x $1\frac{23}{32}$", Axial length 2 1/8" overall.

Plates: Straight line capacity, 180° rotation.

NATIONAL NEUTRALIZING CONDENSERS





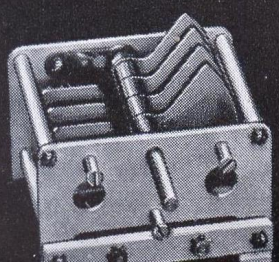

NC-600U **List $.60**

With standoff insulator

NC-600 **List $.50**

Without insulator

For neutralizing low power beam tubes requiring from .5 to 4 mmf, and 1500 max. total volts such as the 6L6. The NC-600U is supplied with a GS-10 standoff insulator screwed on one end, which may be removed for pigtail mounting.

STN **List $2.00**

The Type STN has a maximum capacity of 18 mmf (3000 V), making it suitable for such tubes as the 10 and 45. It is supplied with two standoff insulators.

TCN **List $4.00**

The Type TCN is similar to the TMC. It has a maximum capacity of 25 mmf (6000 V), making it suitable for the 203A, 211 and similar tubes.

NC-800 **List $3.00**

The NC-800 disk-type neutralizing condenser is suitable for the RCA-800, 35T, HK-54 and similar tubes. It is equipped with a micrometer thimble and clamp. The chart below gives capacity and air gap for different settings.

NC-75 **List $4.50**

For 75T, 808, 811, 812 & similar tubes.

NC-150 **List $7.25**

For HK354, RK36, 300T, 852, etc.

NC-500 **List $13.75**

For WE-251, 450TH, 450TL, 750TL, etc.

These larger disk type neutralizing condensers are for the higher powered tubes. Disks are aluminum, insulation steatite.



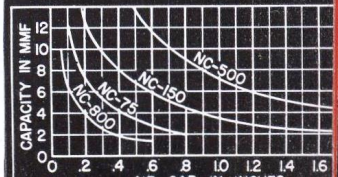

All prices subject to change without notice

NATIONAL COMPANY, INC., MAL

NATIONAL TRANSMITTING CONDENSERS

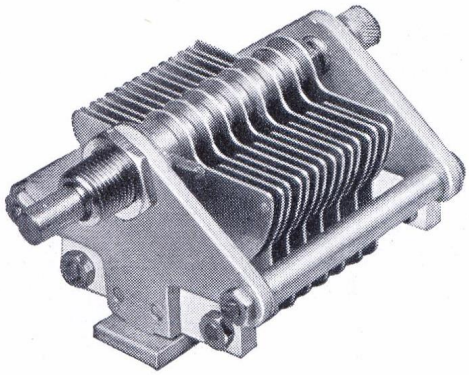

TYPE TMS

is a condenser designed for transmitter use in low power stages. It is compact, rigid, and dependable. Provision has been made for mounting either on the panel, on the chassis, or on two stand-off insulators. Insulation is Isolantite. Voltage ratings listed are conservative.

Capacity	Minimum Capacity	Length	Air Gap	Peak Voltage	No. of Plates	Catalog Symbol	List Price
SINGLE STATOR MODELS							
100 Mmf.	9.5	3″	.026″	1000v.	10	**TMS-100**	**$2.75**
150	11	3″	.026″	1000v.	14	**TMS-150**	**3.00**
250	13.5	3″	.026″	1000v.	23	**TMS-250**	**3.30**
300	15	3″	.026″	1000v.	27	**TMS-300**	**4.00**
35	8	3″	.065″	2000v.	8	**TMSA-35**	**3.30**
50	11	3″	.065″	2000v.	11	**TMSA-50**	**3.60**
DOUBLE STATOR MODELS							
50–50 Mmf.	6–6	3″	.026″	1000v.	5–5	**TMS-50D**	**$4.25**
100–100	7–7	3″	.026″	1000v.	9–9	**TMS-100D**	**5.00**
50–50	10.5–10.5	3″	.065″	2000v.	11–11	**TMSA-50D**	**4.40**

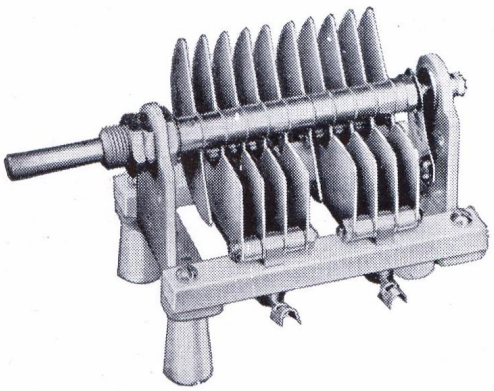

TYPE TMH

features very compact construction, excellent power factor, and aluminum plates .040″ thick with polished edges. It mounts on the panel or on removable stand-off insulators. Isolantite insulators have long leakage path. Stand-offs included in listed price.

Capacity	Minimum Capacity	Length	Air Gap	Peak Voltage	No. of Plates	Catalog Symbol	List
SINGLE STATOR MODELS							
50 Mmf.	9	3¾″	.085″	3500v.	15	**TMH-50**	**$3.85**
75	11	3¾″	.085″	3500v.	19	**TMH-75**	**4.40**
100	12.5	5⅛″	.085″	3500v.	25	**TMH-100**	**5.25**
150	18	6½″	.085″	3500v.	37	**TMH-150**	**6.60**
35	11	5⅛″	.180″	6500v.	17	**TMH-35A**	**5.75**
DOUBLE STATOR MODELS							
35–35 Mmf.	6–6	3¾″	.085″	3500v.	9–9	**TMH-35D**	**$6.00**
50–50	8–8	5⅛″	.085″	3500v.	13–13	**TMH-50D**	**6.60**
75–75	11–11	6½″	.085″	3500v.	19–19	**TMH-75D**	**8.00**

All prices subject to change without notice

NATIONAL TRANSMITTING CONDENSERS

TYPE TMK

is a new condenser for exciters and low power transmitters. Special provision has been made for mounting AR-16 coils in a swivel plug-in mount on either the top or rear of the condenser, (see page 10). For panel or stand-off mounting. Isolantite insulation.

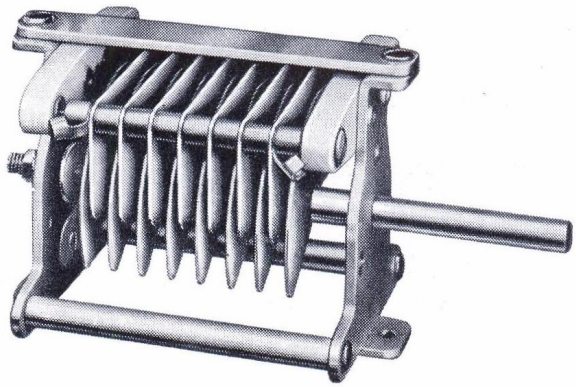

Capacity	Minimum Capacity	Length	Air Gap	Peak Voltage	No. of Plates	Catalog Symbol	List Price
SINGLE STATOR MODELS							
35 Mmf.	7.5	2 7/32"	.047"	1500v.	7	TMK-35	$3.60
50	8	2 3/8"	.047"	1500v.	9	TMK-50	3.85
75	9	2 11/16"	.047"	1500v.	13	TMK-75	4.15
100	10	3"	.047"	1500v.	17	TMK-100	4.40
150	10.5	3 5/8"	.047"	1500v.	25	TMK-150	5.00
200	11	4 1/4"	.047"	1500v.	33	TMK-200	5.50
250	11.5	4 7/8"	.047"	1500v.	41	TMK-250	6.00
DOUBLE STATOR MODELS							
35–35 Mmf.	7.5–7.5	3"	.047"	1500v.	7–7	TMK-35D	$5.75
50–50	8–8	3 5/8"	.047"	1500v.	9–9	TMK-50D	6.50
100–100	10–10	4 1/4"	.047"	1500v.	17–17	TMK-100D	8.00
Swivel Mounting Hardware for AR 16 Coils						SMH	$ .15

TYPE TMC

is designed for use in the power stages of transmitters where peak voltages do not exceed 3000. The frame is extremely rigid and arranged for mounting on panel, chassis or stand-off insulators. The plates are aluminum with buffed edges. Insulation is Isolantite. The stator in the split stator models is supported at both ends.

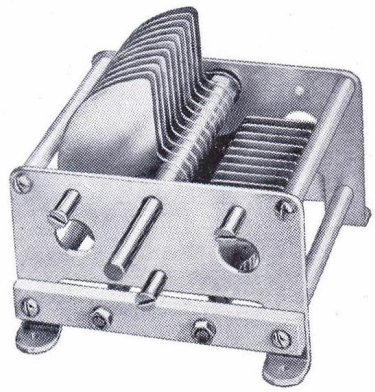

Capacity	Minimum Capacity	Length	Air Gap	Peak Voltage	No. of Plates	Catalog Symbol	List Price
SINGLE STATOR MODELS							
50 Mmf.	10	3"	.077"	3000v.	7	TMC-50	$4.40
100	13	3 1/2"	.077"	3000v.	13	TMC-100	5.00
150	17	4 5/8"	.077"	3000v.	21	TMC-150	5.75
250	23	6"	.077"	3000v.	32	TMC-250	6.60
300	25	6 3/4"	.077"	3000v.	39	TMC-300	7.25
DOUBLE STATOR MODELS							
50–50 Mmf.	9–9	4 5/8"	.077"	3000v.	7–7	TMC-50D	$7.25
100–100	11–11	6 3/4"	.077"	3000v.	13–13	TMC-100D	8.25
200–200	18.5–18.5	9 1/4"	.077"	3000v.	25–25	TMC-200D	11.00

All prices subject to change without notice

NATIONAL COMPANY, INC., MALDEN, MASS., U.S.A.

NATIONAL TRANSMITTING CONDENSERS

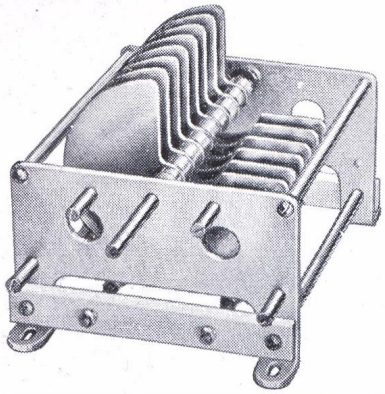

TYPE TMA

is a larger model of the popular TMC. The frame is extremely rigid and arranged for mounting on panel, chassis or stand-off insulators. The plates are of heavy aluminum with rounded and buffed edges. Insulation is Isolantite, located outside of the concentrated field.

Capacity	Minimum Capacity	Length	Air Gap	Peak Voltage	No. of Plates	Catalog Symbol	List Price
SINGLE STATOR MODELS							
300 Mmf.	19.5	4 9/16"	.077"	3000v.	23	TMA-300	$12.00
50	15	4 9/16"	.171"	6000v.	8	TMA-50A	6.50
100	19.5	6 7/8"	.171"	6000v.	17	TMA-100A	10.00
150	22.5	6 7/8"	.171"	6000v.	23	TMA-150A	12.00
230	33	9 5/16"	.171"	6000v.	35	TMA-230A	16.00
100	30	9 1/4"	.265"	9000v.	23	TMA-100B	13.50
150	40.5	12 1/2"	.265"	9000v.	35	TMA-150B	17.00
50	21	7 1/8"	.359"	12000v.	13	TMA-50C	8.00
100	37.5	12 7/8"	.359"	12000v.	27	TMA-100C	14.50
DOUBLE STATOR MODELS							
200–200 Mmf.	15–15	6 7/8"	.077"	3000v.	16–16	TMA-200D	$15.00
50–50	12.5–12.5	6 7/8"	.171"	6000v.	9–9	TMA-50DA	11.00
100–100	17–17	9 5/16"	.171"	6000v.	15–15	TMA-100DA	17.50
60–60	19.5–19.5	12 1/2"	.265"	9000v.	15–15	TMA-60DB	18.50
40–40	18–18	12 7/8"	.359"	12000v.	11–11	TMA-40DC	13.50

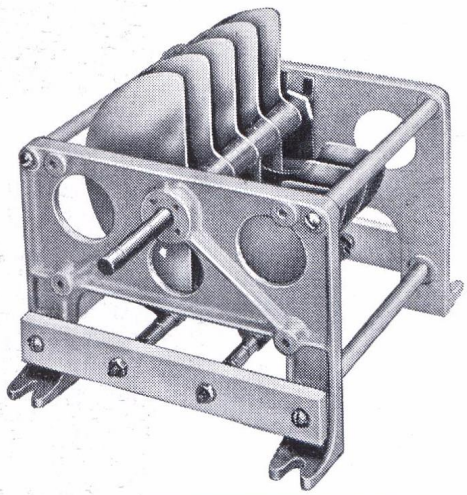

TYPE TML

condenser is a 1 KW job throughout. Isolantite insulators, specially treated against moisture absorption, prevent flashovers. A large self-cleaning rotor contact provides high current capacity. Thick capacitor plates, with accurately rounded and polished edges, provide high voltage ratings. Sturdy cast aluminum end frames and dural tie bars permit an unusually rigid structure. Precision end bearings insure smooth turning and permanent alignment of the rotor. End frames are arranged for panel, chassis or stand-off mountings.

Capacity	Minimum Capacity	Length	Air Gap	Peak Voltage	No. of Plates	Catalog Symbol	List Price
SINGLE STATOR MODELS							
75 Mmf.	25	18 1/16"	.719"	20,000v.	17	TML-75E	$28.75
150	60	18 1/16"	.469"	15,000v.	27	TML-150D	29.00
100	45	13 5/8"	.469"	15,000v.	19	TML-100D	26.00
50	22	8 5/16"	.469"	15,000v.	9	TML-50D	18.00
245	54	18 1/16"	.344"	10,000v.	35	TML-245B+	31.50
150	45	13 5/8"	.344"	10,000v.	21	TML-150B+	28.75
100	32	10 15/16"	.344"	10,000v.	15	TML-100B+	27.50
75	23.5	8 5/16"	.344"	10,000v.	11	TML-75B+	20.00
500	55	18 1/16"	.219"	7,500v.	49	TML-500A+	38.50
350	45	13 5/8"	.219"	7,500v.	33	TML-350A+	30.75
250	35	10 15/16"	.219"	7,500v.	25	TML-250A+	28.75
DOUBLE STATOR MODELS							
30–30 Mmf.	12–12	18 1/16"	.719"	20,000v.	7–7	TML-30DE	$29.00
60–60	26–26	18 1/16"	.469"	15,000v.	11–11	TML-60DD	31.50
100–100	27–27	18 1/16"	.344"	10,000v.	15–15	TML-100DB+	35.00
60–60	20–20	13 5/8"	.344"	10,000v.	9–9	TML-60DB+	30.00
200–200	30–30	18 1/16"	.219"	7,500v.	21–21	TML-200DA+	38.50
100–100	17–17	10 15/16"	.219"	7,500v.	11–11	TML-100DA+	31.50

All prices subject to change without notice

NATIONAL RF CHOKES

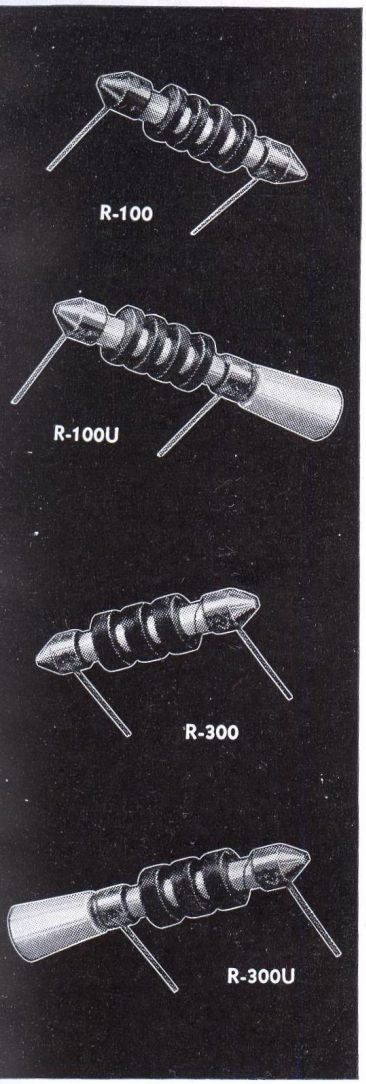

R-100 **List $.50**
Without standoff insulator

R-100U **List $.60**
With standoff insulator

R.F. chokes R-100 and R-100U are identical electrically, but the latter is provided with a removable standoff insulator screwed on one end. Both have Isolantite insulation and both have a continuous universal winding in four sections. Inductance 2½ m.h.; distributed capacity 1 mmf.; DC resistance 50 ohms; current rating 125 ma.

R-300 **List $.50**
Without insulator

R-300U **List $.60**
With insulator

R.F. chokes R-300 and R-300U are similar in size to R-100U but have higher current capacity. The R-300U is provided with a removable standoff insulator screwed on one end. Inductance 1 m.h.; distributed capacity 1 mmf.; DC resistance 10 ohms; current rating 300 ma.

R-152 **List $2.50**

For the 80 and 160 meter bands. Inductance 4 m.h., DC resistance 10 ohms, DC current 600 ma. Coils honeycomb wound on Isolantite core.

R-154 **List $2.50**
R-154U **List $2.00**

For the 20, 40 and 80 meter bands. Inductance 1 m.h., DC resistance 6 ohms, DC current 600 ma. Coils honeycomb wound on Isolantite core. The R-154U does not have the third mounting foot and the small insulator, but is otherwise the same as R-154. See illustration.

R-175 **List $3.00**

The R-175 Choke is suitable for parallel-feed as well as series-feed in transmitters with plate supply up to 3000 volts modulated or 4000 volts unmodulated. Unlike conventional chokes, the reactance of the R-175 is high throughout the 10 and 20 meter bands as well as the 40, 80 and 160 meter bands. Inductance 225 μh, distributed capacity 0.6 mmf., DC resistance 6 ohms, DC current 800 ma., voltage breakdown to base 12,500 volts.

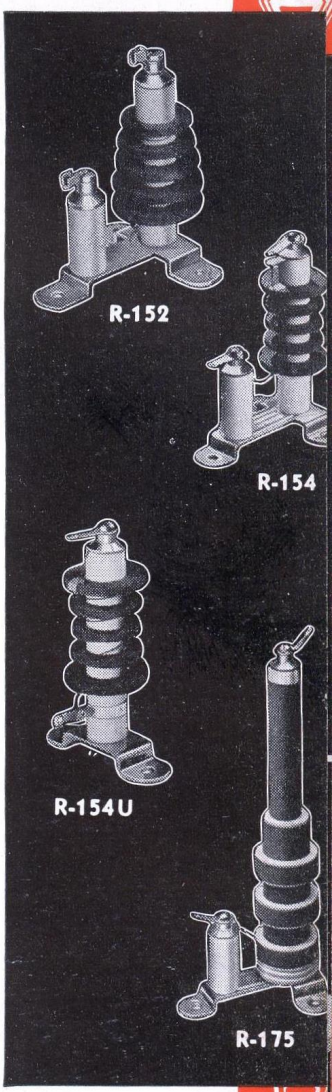

NATIONAL SHAFT COUPLINGS

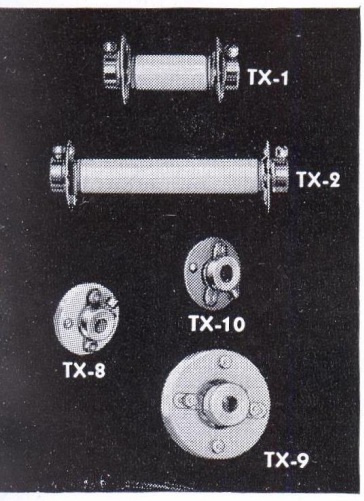

TX-1, Leakage path 1" **List $1.10**
TX-2, Leakage path 2½" **List $1.25**
Flexible couplings with glazed Isolantite insulation which fit ¼" shafts.

TX-8 **List $.85**
A non-flexible rigid coupling with Isolantite insulation. 1" diam. Fits ¼" shaft.

TX-9 **List $1.25**
This small insulated flexible coupling provides high electrical efficiency when used to isolate circuits. Insulation is Steatite. 1⅝" diam. Fits ¼" shaft.

TX-10 **List $.60**
A very compact insulated coupling free from backlash. Insulation is canvas Bakelite. 1 1/16" diam. Fits ¼" shaft.

TX-11 **List $.70**
The flexible shaft of this coupling connects shafts at angles up to 90 degrees, and eliminates misalignment problems. Fits ¼" shafts. Length 4¼".

TX-12, Length 4⅝" **List $1.40**
TX-13, Length 7⅛" **List $1.65**
These couplings use flexible shafting like the TX-11 above, but are also provided with Isolantite insulators at each end.

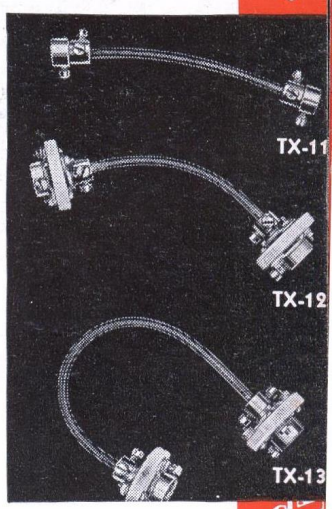

All prices subject to change without notice

NATIONAL POWER SUPPLIES

National Power Supplies are specially designed for high frequency receivers, and include efficient filters for RF disturbances as well as for hum frequencies. The various types for operation from an AC line are listed under the receivers with which they are used.

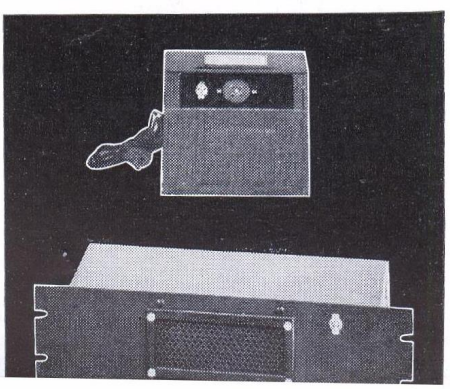

High voltage power supplies can be supplied for National Receivers for operation from batteries. These units are of the vibrator type.

686, Table model, (165 V., 50 MA.) for operation from 6.3 volts DC, with vibrator.
List $49.50

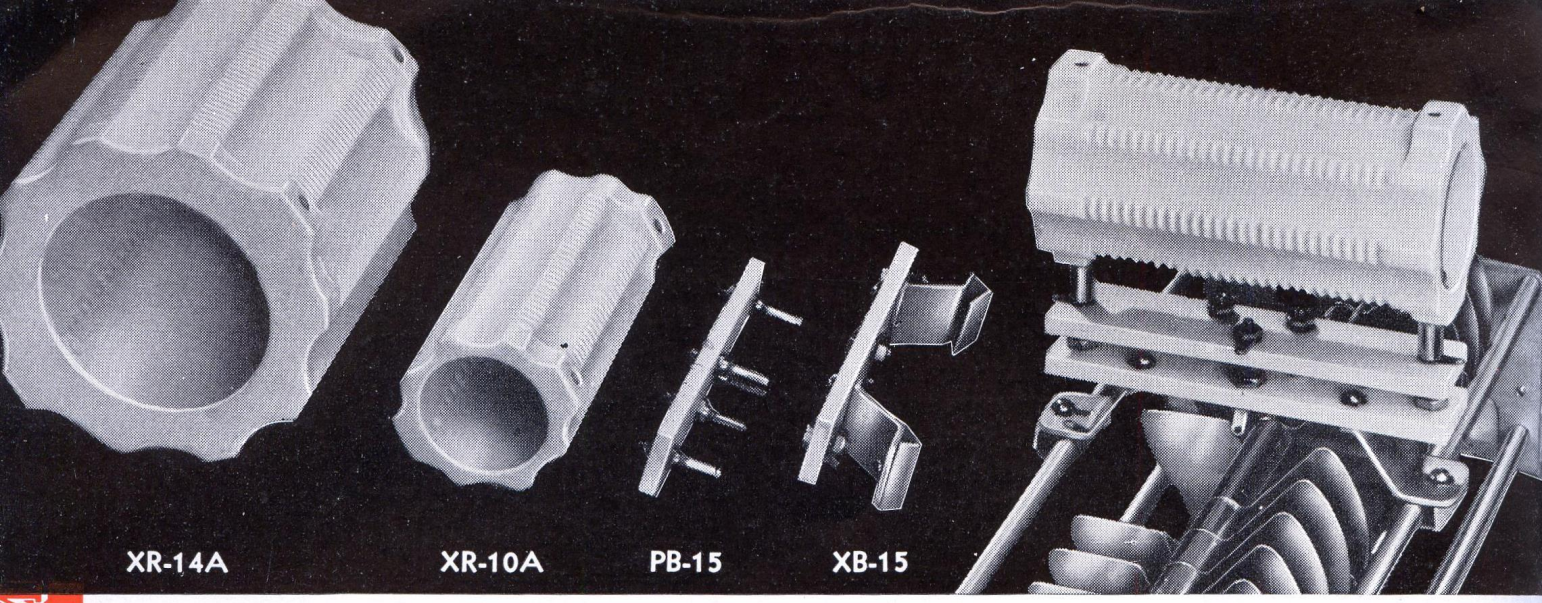

TRANSMITTER COIL FORMS

The Transmitter Coil Forms and Mounting are designed as a group, and mount conveniently on the bars of a TMA condenser. The larger coil form, Type XR-14A, has a winding diameter of 5", a winding length of 3¾" (30 turns total) and is intended for the 80 meter band. The smaller form, Type XR-10A, has a winding length of 3¾" and a winding diameter of 2½" (26 turns total). It is intended for the 20 and 40 meter bands.

Either coil form fits the PB-15 plug. For higher frequencies, the plug may be used with a self-supporting coil of copper tubing. The XB-15 Socket may be mounted on breadboards or chassis, as well as on the TMA Condenser.

SINGLE UNITS

XR-10A, Coil Form only	**List $1.65**
XR-14A, Coil Form only	**List $4.00**
PB-15, Plug only	**List $1.50**
XB-15, Socket only	**List $2.00**

ASSEMBLIES

UR-10A, Assembly (including small Coil Form, Plug and Socket)	**List $5.00**
UR-14A, Assembly (including large Coil Form, Plug and Socket)	**List $7.00**

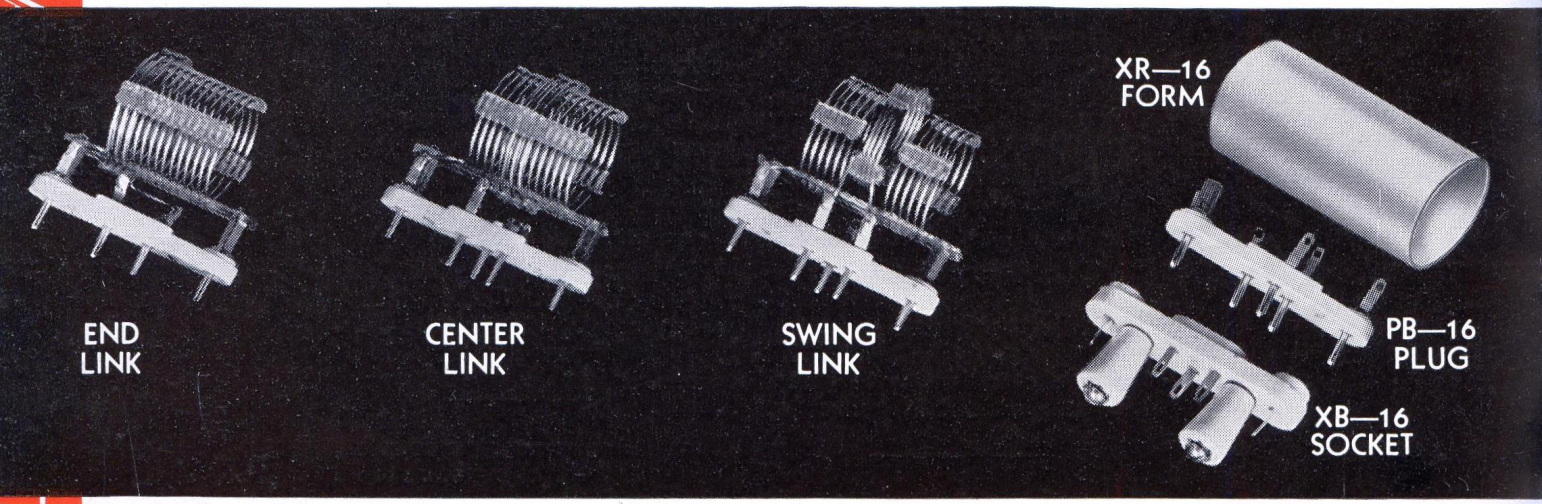

EXCITER COILS AND FORMS — TYPE AR-16 (Air Spaced)

These air-spaced coils are suitable for use in stages where the plate input does not exceed 50 watts and are available in the sizes tabulated below. Capacities listed will resonate the coils at the low frequency end of the band and include all stray circuit capacities. All have separate link coupling coils and all fit the PB-16 Plug and XB-16 Socket.

The XR-16 Coil Form also fits the PB-16 Plug and XB-16 Socket. It has a winding diameter of 1¼" and a winding length of 1¾".

Order by Catalog Symbol Shown in This Table

Band	End Link	Cap Mmf	Center Link	Cap Mmf	Swinging Link	Cap Mmf
5 meter	AR16-5E	20	AR16-5C	20	—	—
10 meter	AR16-10E	20	AR16-10C	20	AR16-10S	25
20 meter	AR16-20E	26	AR16-20C	26	AR16-20S	40
40 meter	AR16-40E	33	AR16-40C	33	AR16-40S	55
80 meter	AR16-80E	37	AR16-80C	37	AR16-80S	60
160 meter	AR16-160E	65	AR16-160C	65	—	—

XR-16, Coil Form only — **List $.70**
PB-16, Plug-in Base only — **List $.45**
XB-16, Plug-in Socket only — **List $.55**

AR-16 Coils — Any type (see table). Including PB-16 Plug as illustrated. Each, **List $1.65**

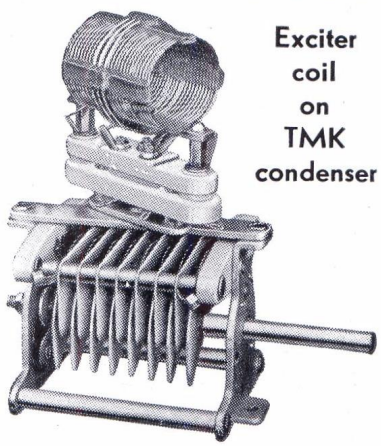

Exciter coil on TMK condenser

All prices subject to change without notice

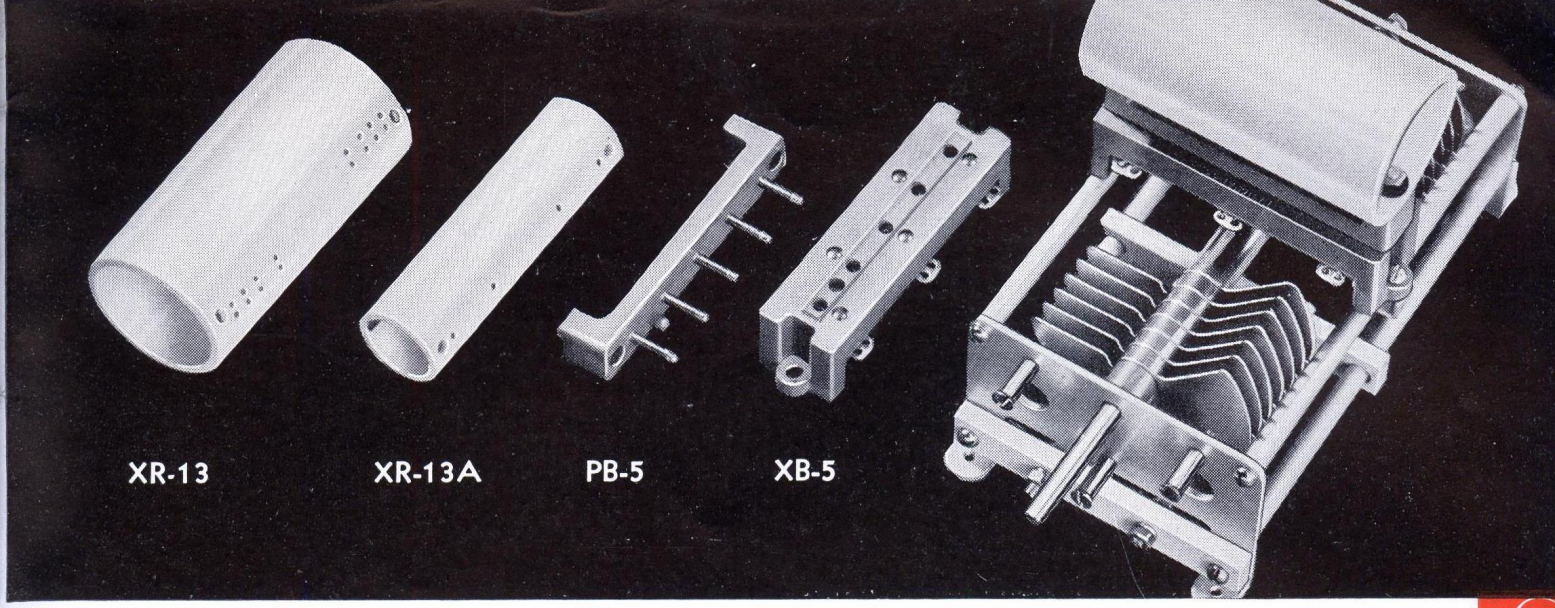

BUFFER COIL FORMS

National Buffer Coil Forms are designed to mount directly on the tie bars of a TMC condenser using the PB-5 Plug and XB-5 Socket. Plug and Socket are of molded R-39.

The two coil forms are of Isolantite, left unglazed to provide a tooth for coil dope. The larger form, Type XR-13, is 1¾" in diameter and has a winding length of 2¾". The smaller form, Type XR-13A, is 1" in diameter and provides a winding length of 2¾". Both forms have holes for mounting and for leads.

SINGLE UNITS

XR-13, Coil Form only **List $1.25**
XR-13A, Coil Form only **List $ .70**
PB-5, Plug only **List $ .85**
XB-5, Socket only **List $ .85**

ASSEMBLIES

UR-13A, Assembly (including small Coil Form, Plug and Socket) **List $2.25**
UR-13, Assembly (including large Coil Form, Plug and Socket) **List $2.75**

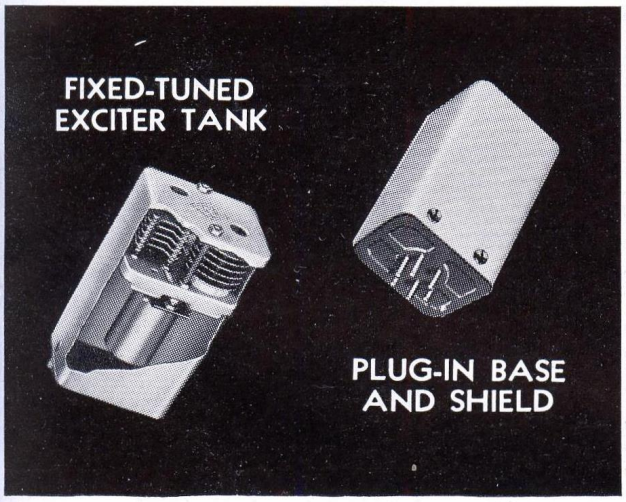

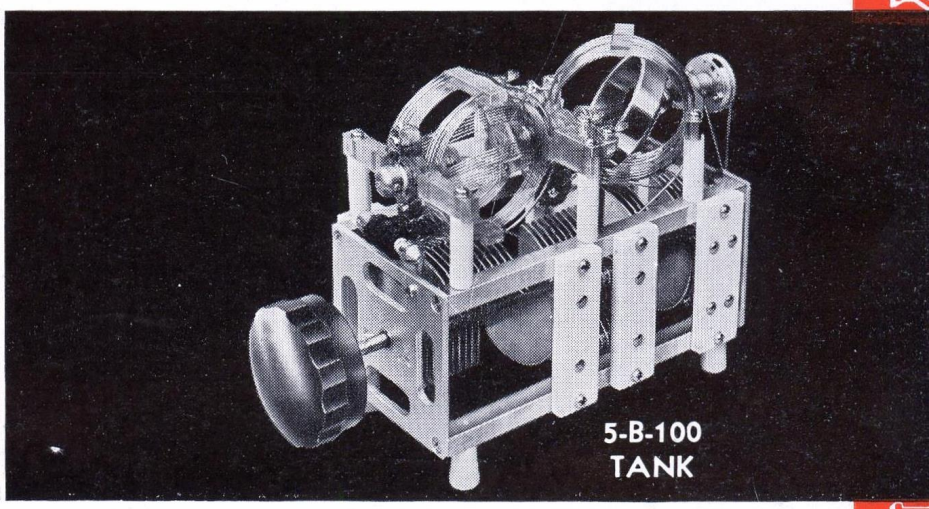

FIXED TUNED EXCITER TANK

Similar in general construction to National I.F. transformers, this unit has two 25 mmf., 2000 volt air condensers and an unwound XR-2 coil form.

FXT, without plug-in base **List $5.00**
FXTB-5, with 5 prong base **List $5.50**
FXTB-6, with 6 prong base **List $5.50**

PLUG-IN BASE AND SHIELD

The low-loss R-39 base is ideal for mounting condensers and coils when it is desirable to have them shielded and easily removable. Shield can is 2" x 2⅜" x 4⅛".

PB-10-5, (5 Prong Base & Shield) **List $.85**
PB-10-6, (6 Prong Base & Shield) **List $.85**
PB-10A-5, (5 Prong Base only) **List $.45**
PB-10A-6, (6 Prong Base only) **List $.45**

5-B-100 TANK

The National 5-B-100 is a complete tank circuit, (including coils, condenser and R.F. choke), which tunes through five amateur bands with a single dial. The tank replaces the tuning condenser, set of five plug-in coils, plug-in coil socket and R.F. choke, without sacrificing efficiency or space, yet it costs no more.

The 5-B-100 is actually more compact than a tuning condenser and mounted plug-in coil for the same power capabilities. In addition to the compactness and wide tuning range advantages of the 5-B-100, the tank provides for the first time a real constant L/C ratio throughout the tuning range. Harmonics from the low-frequency bands are suppressed without sacrifice of efficiency on the high-frequency bands. Constant link loading or capacity coupling may be used.

The 5-B-100 is an ideal plate tank for R.F. amplifiers using such tubes as 35T, 809, 811, 812, RK-11, RK-12, HK-24, HY-30Z, HY-51Z, etc. with input up to 150 watts (1250 volts unmodulated or 750 volts modulated maximum). Also ideal for grid tank of amplifiers up to 2 KW plate input.

Four mounting insulators are supplied on the base. Overall dimensions are 4 inches wide, 6 inches high and 8 inches deep. Shipping weight, 5 lbs. **5-B-100 Tank, List $40.00**

All prices subject to change without notice

COMPANY
EN, MASS., U.S.A.

NATIONAL PARTS

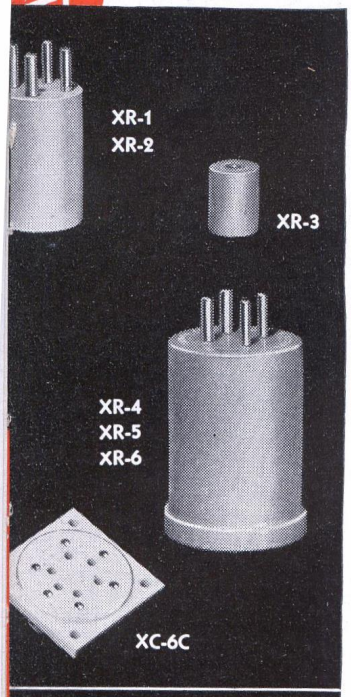

COIL FORMS

XR-1, Four prong, **List $.55**
XR-2, without prongs **List $.40**
Molded of R-39, permitting them to be grooved and drilled. Coil form diameter 1", length 1½".

XR-3 **List $.35**
Molded of R-39. Diameter 9/16", length ¾". Without prongs.

XR-4, Four prong, **List $.85**
XR-5, Five prong, **List $.85**
XR-6, Six prong, **List $.85**
Molded of R-39, permitting them to be grooved and drilled. Coil form diameter 1½", length 2¼". A special socket is required for the six-prong form.

XC6C, Special six-prong socket for XR-6 Coil Form, **List $.85**

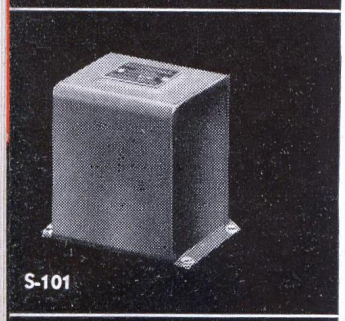

IMPEDANCE COUPLER

S-101 **List $6.60**
A plate choke, coupling condenser and grid leak sealed in one case, for coupling the output of a regenerative detector to an audio stage. Used in SW-3U.



OSCILLATOR COIL

OSR **List $1.65**
A shielded oscillator coil which tunes to 100 KC with .00041 Mfd. Two separate inductances, closely coupled. Excellent for interruption-frequency oscillator in super-regenerative receivers.



H. F. COIL FORMS

Symbol	Outside Diameter	Length	List
PRC-1	3/8"	3/8"	$.20
PRC-2	3/8"	1/2"	.20
PRC-3	3/8"	3/4"	.20
PRD-1	1/2"	1/2"	.20
PRD-2	1/2"	1"	.20
PRE-1	9/16"	3/4"	.25
PRE-2	9/16"	1"	.25
PRE-3	9/16"	2"	.35
PRF-1	3/4"	3/4"	.35
PRF-2	3/4"	1 1/4"	.45

COIL SHIELDS

RO, coil shield **List $.40**
2" x 2 3/8" x 4 1/8" high

J30, coil shield **List $.40**
2½" dia. x 3¾" high

B30, coil shield **List $.40**
3" dia. x 3¾" high without mounting base.

B30-B, coil shield **List $.55**
Same as above, but with mounting base.



TUBE SHIELDS

TS, tube shield **List $.45**
With cap and base.

T58, tube shield **List $.45**
With cap and base, for 77, 78, etc. tubes.

T78, tube shield **List $.45**
With cap and base, for 77, 78, etc. tubes.

T14, tube shield **List $.45**
2⅛" high, for 814, RK-20, etc.

T07, tube shield **List $.45**
3" high, for 807, RK-23, etc.

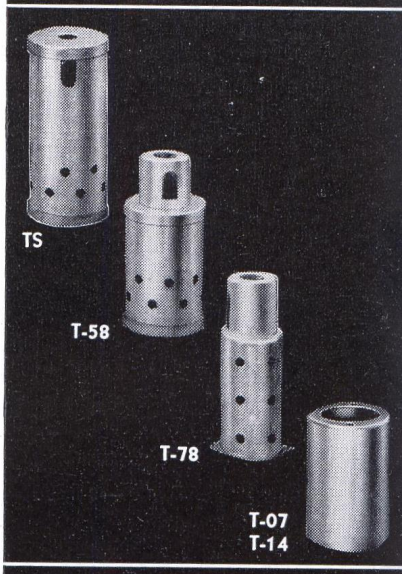

JACK SHIELD

JS-1, Jack shield **List $.40**
For shielding small standard jacks mounted behind a panel, or on the ends of extension cords.

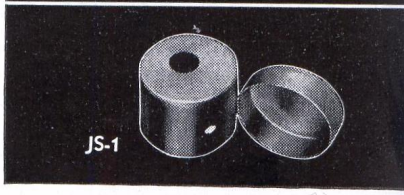

NATIONAL CABINETS

The National Cabinets listed below are the same as those used in National Receivers, except that they are supplied in blank form. They are made of heavy gauge steel, and the paint is unusually well bonded to the metal. Sub-bases and bottom covers are included in the price.

	Width	Height	Depth	List Price
Type C-SW3	9¾"	7"	9"	$6.00
Type C-NC100	17¼"	8¾"	11¼"	9.50
Type C-HRO	16¾"	8¾"	10"	9.50
Type C-One-Ten	11"	7"	7¼"	5.00
Type C-SRR	7½"	7"	7½"	4.00

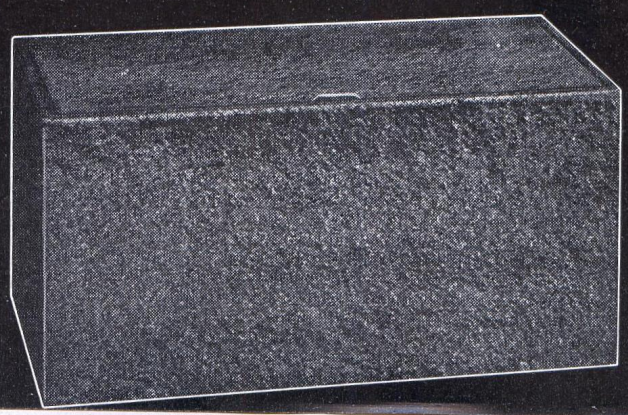

NATIONAL PARTS

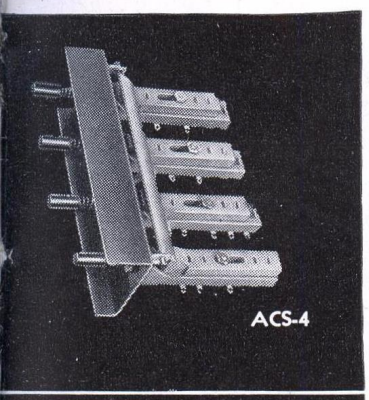
ACS-4

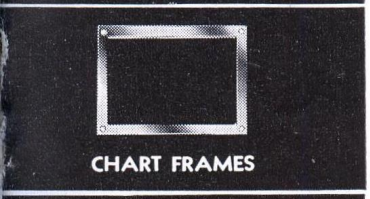
CHART FRAMES


COIL DOPE


NDC-8
NDC-10
NDC-2

PUSH SWITCH

ACS-4, Four gang, with trigger bar **List $5.50**

ACS-1, Single section, less trigger bar **List $1.40**

The National Interlocking Push Switch has low losses, complete reliability and positive contacts. Insulation is R-39. The silverplated contacts are double pole, double throw.

CHART FRAME

The National Chart Frame is blanked from one piece of metal, and includes a celluloid sheet to cover the chart. Size 2¼" x 3¼", with sides ¼" wide.

Type CFA **List $.55**

COIL DOPE

CD-1, ¼ pint can **List $1.65**

Liquid Polystyrene Cement — is ideal for windings as it will not spoil the properties of the best coil form.

SPEAKER CABINETS

NDC-8 for 8" speaker **List $5.50**

NDC-10 for 10" speaker **List $6.60**

NDC-2 for 10" speaker **List $8.50**

These metal speaker cabinets are acoustically correct. They are lined with acoustic felt, and are of welded construction to eliminate rattles. Finish is black wrinkle on NDC-8 and NDC-10. NDC-2 is finished in two-tone gray to match the NC-200 TG receiver.

National Oscilloscopes have power supply and input controls built in. A panel switch permits use of the built-in 60-cycle sweep or external audio sweep for securing the familiar trapezoid pattern for modulation measurements.

CRM, less tubes **List $21.00**

1" screen, using RCA-913 and 6X5 rectifier. Table model, 4⅛" x 6⅛" x 8".

CRR, less tubes **List $35.00**

2" screen, using RCA-902 and 6X5 rectifier. Relay rack mounting.

I. F. TRANSFORMERS

IFC, Transformer, air core **List $5.50**

IFCO, Oscillator, air core **List $5.50**

Air dielectric condensers isolated from each other by an aluminum shield. Litz wound coils on a moisture proofed ceramic base. Shield can 4⅛" x 2⅜" x 2". Available for either 175 KC or 450–550 KC. Specify frequency.

IFD, Diode Transformer, air core **List $3.85**

Tuned primary and untuned, closely-coupled secondary for full-wave diode rectifiers. For noise silencing circuits, etc. 450–550 KC, air core only.

IFE, Transformer. Same as IFC but iron core, 450–550 KC only. **List $5.50**

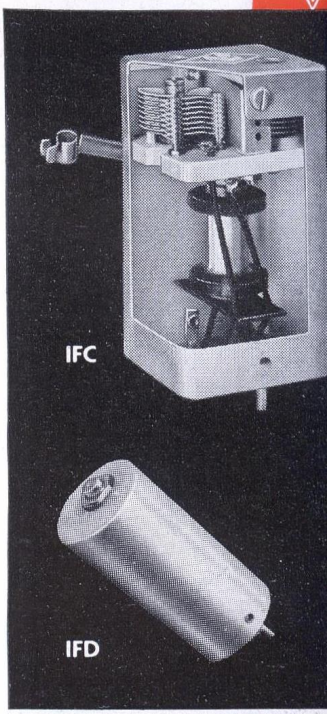
IFC

IFD

NATIONAL HIGH FIDELITY TRF UNITS

Each chassis provides a three-stage RF Amplifier tuned to one station only.

Each RF Transformer is tuned both primary and secondary (8 tuned circuits). The coupling is adjustable to include 10 KC with less than 1 db variation in the audio range. Sensitivity is adjustable from 5 microvolts to one volt. Three models cover ranges of 540–875, 740–1230, and 1100–1700 KC. The chassis fits a standard 3½" relay rack panel.

DLUS, Tuner, wired and tested unit on ⅛" steel, wrinkle finish, **less tubes,** **List $82.50**

DLUA, Tuner, same as DLUS but has 3/16" aluminum panel, crackle finish, **less tubes** **List $86.50**

DLCA, Chassis as illustrated with sockets and terminals riveted in place **List $5.00**

DLPS, Steel ⅛" panel **List $1.65**

DLPA, Aluminum 3/16" panel **List $5.50**

DLT, RF Transformer, set of four required **List, each $7.25**

(Specify operating frequency)

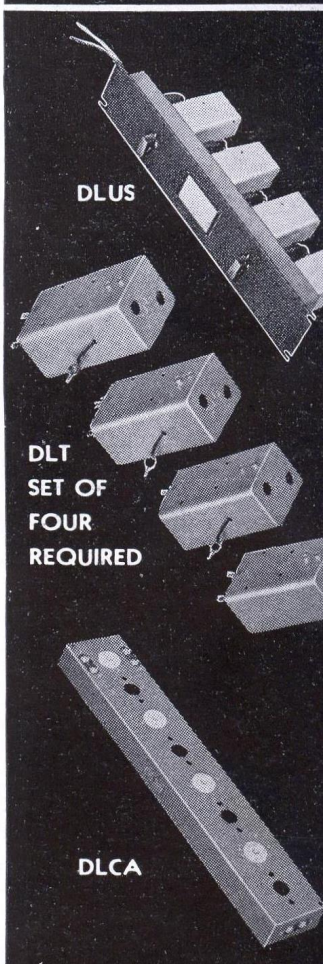
DLUS

DLT SET OF FOUR REQUIRED

DLCA

NATIONAL OSCILLOSCOPES


CRM

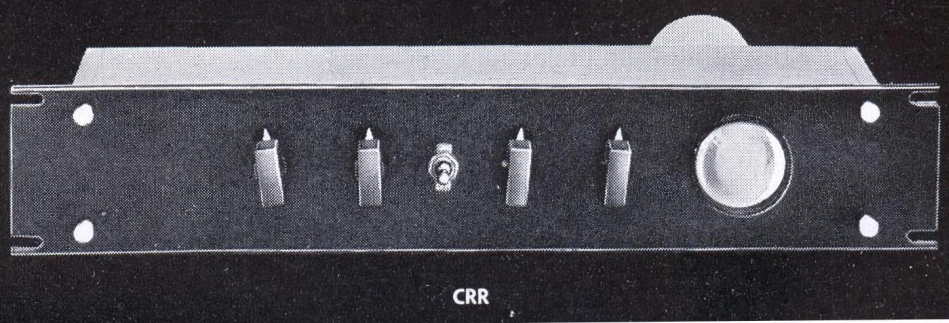
CRR

NATIONAL LOW-LOSS SOCKETS AND INSULATORS



XCA **List $1.65**
A low-loss socket for acorn triodes.

XMA **List $2.20**
For pentode acorn tubes, this socket has built-in by-pass condensers. The base is a copper plate.

XM-10 **List $1.50**
A heavy duty metal shell socket for tubes having the UX base.

XM-50 **List $2.00**
A heavy duty metal shell socket for tubes having the Jumbo 4-pin base ("fifty watters").

JX-50 **List $1.35**
Without Standoff Insulators

JX-50S **List $1.65**
With Standoff Insulators

A low-loss wafer socket for the 813 and other tubes having the Giant 7-pin base.

JX-100 **List $3.30**
Without Standoff Insulators

JX-100S **List $4.00**
With Standoff Insulators

A low-loss wafer socket for the 803, RK-28 and other tubes using the Giant 5-pin base.

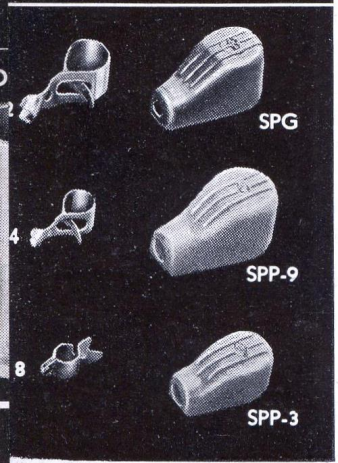

SAFETY GRID & PLATE CAPS

SPG **List $.40**
9/16" Cap, R-39 L. L. insulation. These offer protection against accidental contact with High Voltage lobe caps.

SPP-9 **List $.40**
9/16" Cap L. L. ceramic insulation.

SPP-3 **List $.35**
3/8" Cap L. L. ceramic insulation

GRID & PLATE GRIPS

12, for 9/16" Caps **List $.10**
24, for 3/8" Caps **List $.05**
8, for 1/4" Cap **List $.05**
12 & **24** suitable for glass tubes
8 is for metal tubes

GS-1, 1/2" x 1 3/8" **List $.40**
GS-2, 1/2" x 2 7/8" **List $.50**
GS-3, 3/4" x 2 7/8" **List $1.00**
GS-4, 3/4" x 4 7/8" **List $1.25**
GS-4A, 3/4" x 6" **List $1.75**

Cylindrical low-loss steatite standoff insulators with nickel plated caps and bases.

GSJ, (not illustrated) **List $.10**
A special nickel plated jack top threaded to fit the 3/4" diameter insulators GS-3, GS-4 & GS-4A.

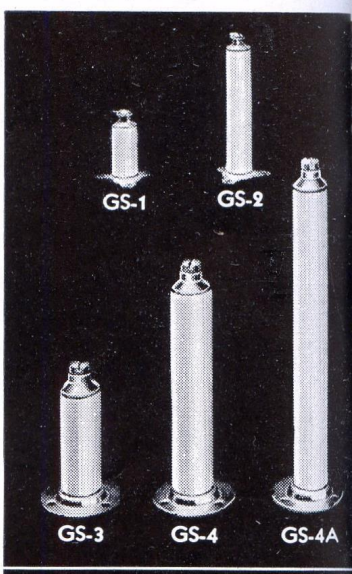

GS-5, 1 1/4" **List, each $.40**
GS-6, 2" **List, each $.70**
GS-7, 3" **List, each $1.25**
GS-10, 3/4", package of 10 **List $1.20**

These cone type standoff insulators are of low-loss steatite. They have a tapped hole at each end for mounting.

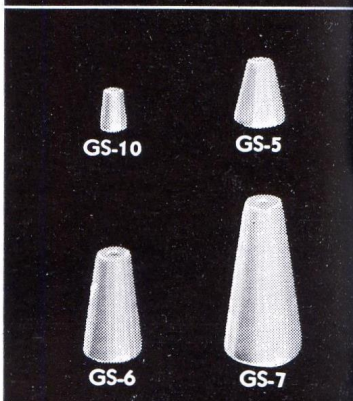

GS-8, with terminal **List $.90**
GS-9, with Jack **List $1.25**

These low-loss steatite standoff insulators are also useful as lead-through bushings.



XC Series Sockets

XC-4	List $.60
XC-5	List $.65
XC-6	List $.70
XC-7S	List $.75
XC-7L	List $.75
XC-8	List $.65

National wafer sockets have exceptionally good contacts with high current capacity together with low loss Isolantite insulation. All types have a locating groove to make tube insertion easy.

All prices subject to change without notice

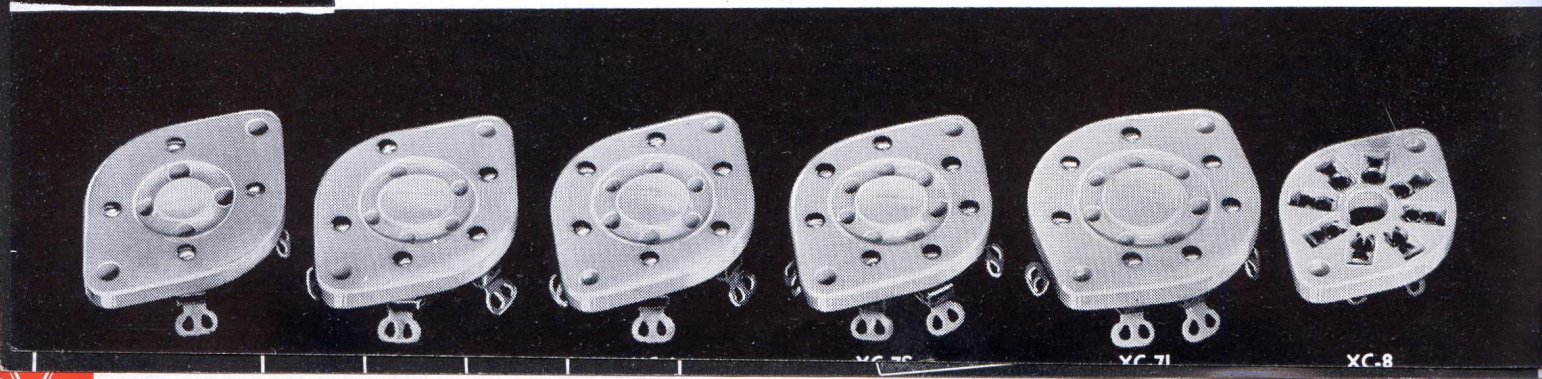

NATIONAL LOW-LOSS SOCKETS AND INSULATORS

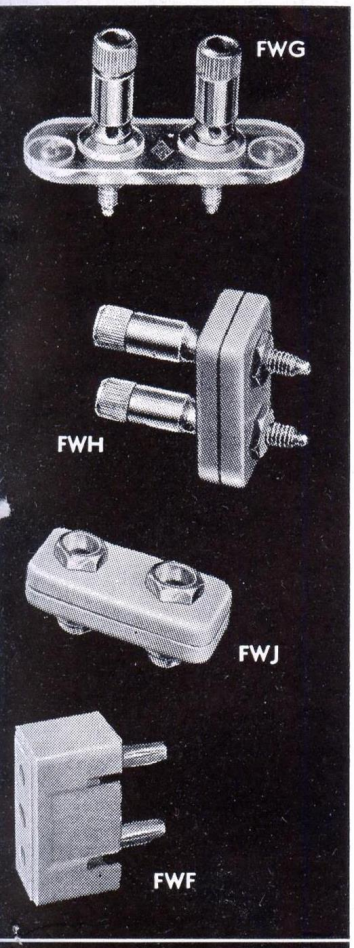

FWG **List $.70**

A Victron terminal strip for high frequency use. The binding posts take banana plugs at the top, and grip wires through hole at the bottom, simultaneously, if desired.

FWH **List $.95**

The insulators of this terminal assembly are molded R-39 and have serrated bosses that allow the thinnest panel to be gripped firmly, and yet have ample shoulders. Binding posts same as FWG above.

FWJ **List $.75**

This assembly uses the same insulators as the FWH above, but has jacks. When used with the FWF plug (below), there is no exposed metal when the plug is in place.

FWF **List $1.10**

This molded R-39 plug has two banana plugs on 3/4" centers and fits FWH or FWJ above. Leads may be brought out through the top or side.

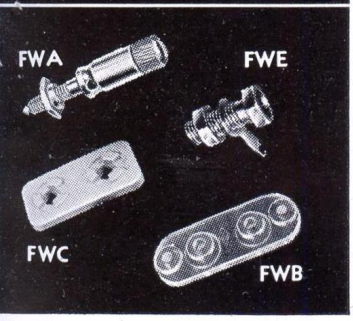

FWA, Post **List, each $.30**
Brass Nickel Plated

FWE, Jack **List, each $.20**
Brass Nickel Plated

FWC, Insulator
List, per pair $.40
R-39 Insulation

FWB, Insulator **List, each $.10**
Polystyrene insulation

CIR Series Sockets

Any Type **List $.45**

Type CIR Sockets feature low-loss isolantite or steatite insulation, a contact that grips the tube prong for its entire length, and a metal ring for six position mounting. The sockets are supplied with two metal standoffs.

AA-3 **List $.60**

A low-loss steatite spreader for 6 inch line spacing. (600 ohms impedance with No. 12 wire.)

AA-5 **List $.50**

A low-loss steatite aircraft-type strain insulator.

AA-6 **List $.90**

A general purpose strain insulator of low-loss steatite.

XS-6 **List, each $.20**

A low-loss isolantite bushing for 1/2" holes.

XP-6

Same as above but Victron.
List, box of ten $.85

TPB **List, per dozen $.85**

A threaded polystyrene bushing with removable .093 conductor moulded in, 3/8" diam., 32 thread.

XS-7, (3/8" Hole) **List $.55**

XS-8, (1/2" Hole) **List $.75**

Steatite bushings. Prices include male and female bushings with metal fittings.

XS-1, (1" Hole) **List $1.20**

XS-2, (1 1/2" Hole) **List $1.35**

Prices listed are per pair, including metal fittings. Insulation steatite.

XS-3, (2 3/4" Hole) **List $6.00**

XS-4, (3 3/4" Hole) **List $7.25**

Prices are per pair, including metal fittings. These low-loss steatite bowls are ideal for lead-in purposes at high voltages.

XS-5, Without Fittings
List, each $8.25

XS-5F, With Fittings
List, per pair $17.00

These big low-loss bowls have an extremely long leakage path and a 5 1/4" flange for bolting in place. Insulation steatite.

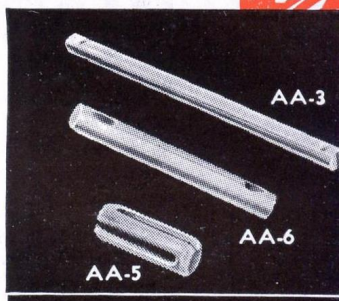

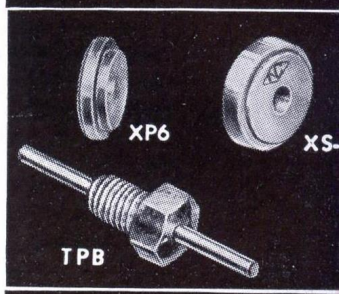

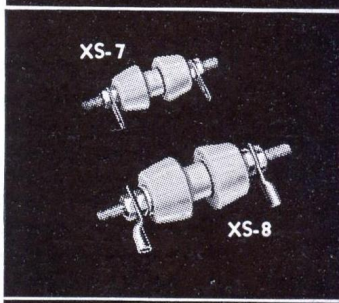

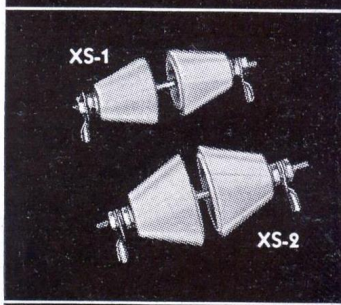

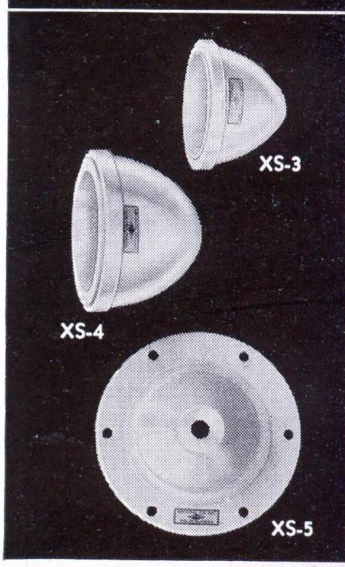

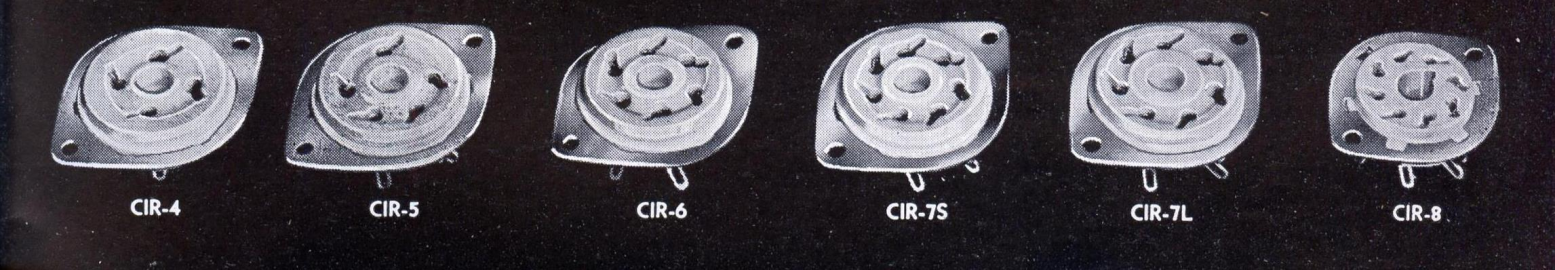

NATIONAL NC-200

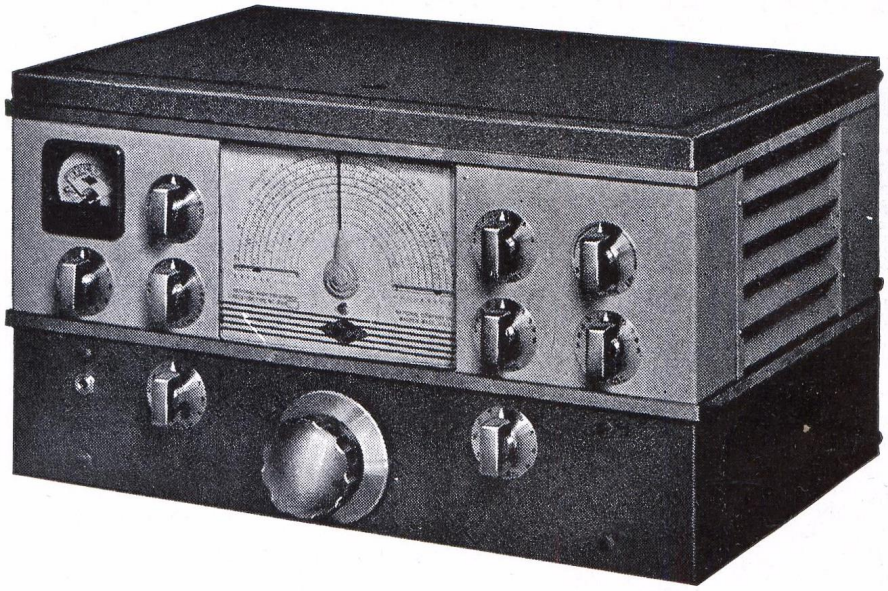

The National NC-200 is a new communications receiver having a number of features not previously available. Twelve tubes are used in a highly perfected circuit that includes an extremely effective noise limiter. The crystal filter has an exceptionally wide selectivity range for use on both CW and phone, as well as a phasing circuit that makes rejection ratios as high as 10,000 to 1 available even when the interfering signal is only a few hundred cycles from the desired signal. The AVC holds the audio constant within 2 db for signals from 10 microvolts to 100,000 microvolts. The sensitivity of the NC-200 is particularly high, requiring only 1 microvolt input for 1 watt of audio output on the highest frequencies covered by the receiver. Signal-to-image ratio is better than 30 db at ten meters.

There are ten calibrated coil ranges, each with its own scale on the direct-reading dial. Six of these ranges provide continuous coverage from 490 KC to 30 MC. The remaining four ranges cover the 10, 20, 40 and 80 meter bands, each of which is spread over the major portion of the dial scale. Ranges are selected by a panel control knob. A movable-coil system similar to the NC-100 is used. The inertia-type dial drive has a ratio of about 20 to 1.

All models of the NC-200 are suitable for either AC or battery operation, having both a built-in AC power supply and a special detachable cable and plug for battery connection. Removal of the speaker plug disconnects both plate and screen circuits of the audio power stage thus providing maximum battery economy. The B supply filter and the standby switch are wired to the battery terminals, so that the filter is available for vibrator or dynamotor B supplies.

The ten-inch speaker is housed in a separate cabinet specially designed to harmonize with the trim lines of the receiver. The undistorted output is 8 watts.

All features expected in a fine communication receiver are provided. These include CW oscillator, Signal Strength Meter, B-supply switch, etc. A phonograph input jack is provided.

NC-200 TG, Table Model, two tone gray wrinkle receiver only. **List $265.83**

NC-2 TS, Table mounting 10" P.M. Loud Speaker in cabinet to match NC-200 TG above. **List $25.00**

NC-200 RG, Rack Model, gray wrinkle 3/16" aluminum panel receiver only. **List $289.33**

NC-2 RS, Rack Mounting 10" P.M. Loud Speaker on 10½" panel to match NC-200 RG above. **List $25.00**

NATIONAL NEW NC-45

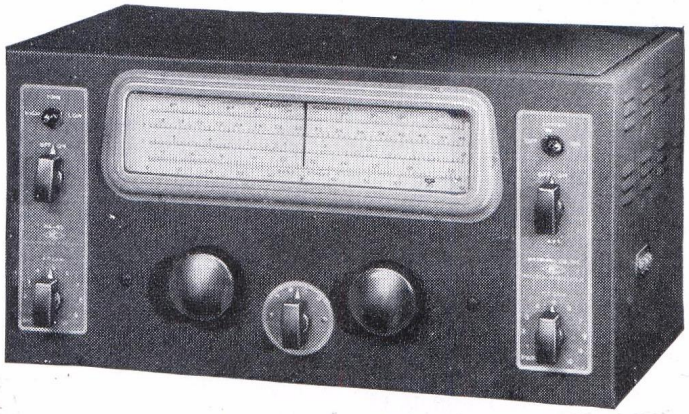

The NC-45 receiver is an eight tube superheterodyne combining capable performance with low price. Features include a series valve noise limiter with automatic threshold control, tone control, CW oscillator, separate RF and AF gain controls, and AVC. Power supplies are self contained except for the battery model which must have an external source of heater and plate power, such as batteries or vibrapack.

A straight-line-frequency condenser is used in conjunction with a separate band spread condenser. This combination plus the full vision dial calibrated in frequency for each range covered and a separate linear scale for the band spread condenser, makes accurate tuning easy. Both condensers have inertia type drive. A coil switch with silver plated contacts selects the four ranges from 550 KC to 30 MC. Provision is made for either headphone or speaker.

Like all receivers which have no preselector stage, the NC-45 is not entirely free from images. However, where price is an important consideration, the NC-45 will be found a very satisfactory receiver.

NC-45 — Receiver only, complete with tubes, coils covering from 550 KC to 30 MC for 105–130 volts AC or DC operation — black finish. **List $84.17**

NC-45B — Receiver only, same as above but for battery operation, less batteries. **List $84.17**

NC-45A — Receiver only, same as above but for 105–130 volts AC only. **List $84.17**

NC-44TS — Loud Speaker in table mounting cabinet to match above receivers. **List $11.66**

RRA — Relay Rack Adapters designed for mounting these receivers in a standard relay rack. **List $2.75**

Shipping Weights: All models, 45 pounds, including speaker.

All prices subject to change without notice

NATIONAL HRO

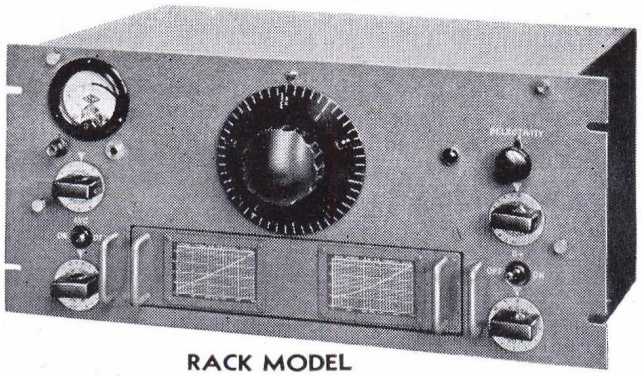

RACK MODEL

The HRO Receiver is a high-gain superheterodyne designed for communication service. Two preselector stages give remarkable image suppression, weak signal response and high signal-to-noise ratio. Air-dielectric tuning capacitors account, in part, for the high degree of operating stability. A crystal filter with both variable selectivity and phasing controls makes possible adjustment of selectivity over a wide range. Heterodynes and interfering c.w. signals may be "phased out" (attenuated) by correct setting of the phasing control. A signal strength meter, connected in a vacuum tube bridge circuit, is calibrated in S units from 1 to 9 and in db above S9 from 0 to 40. Also included are automatic and manual volume control features, a beat oscillator, a headphone jack and a B+ stand-by switch. Power supply is a separate unit. The standard model of HRO is supplied with four sets of coils covering the frequencies from 1.7 to 30 megacycles. Each coil set covers two amateur bands and the spectrum between. The higher frequency amateur band of each range, by a simple change-over operation, may be expanded to occupy 400 divisions of the 500 division PW instrument type dial.

For those who require the high performance of the HRO but do not need its extreme versatility, the HRO Jr. is offered. The fundamental circuit and mechanical details of both receivers are identical, but the HRO Jr. is simplified by omitting the crystal filter, signal strength meter and by supplying coils less the band-spread feature.

The frequency range of both the HRO and HRO Jr. may be extended to 50 kilocycles by using additional coil sets.

All models of the HRO are supplied with 6.3 volt heater type tubes. Table models and accessories are finished in black wrinkle enamel.

A technical bulletin covering completely all details will be supplied upon request.

HRO table model, receiver only, complete with four sets of coils (1.7–4.0, 3.5–7.3, 7.0–14.4, 14.0–30.0 MCS). **List $329.50**

HRO Jr., table model, receiver only, with one set of 14 to 30 mc. coils. **List $198.00**

COILS

HRO Type E,	Range 900–2050 kc	**List $22.00**
HRO Type F,	Range 480–960 kc	**List $22.00**
HRO Type G,	Range 180–430 kc	**List $30.00**
HRO Type H,	Range 100–200 kc	**List $33.00**
HRO Type J,	Range 50–100 kc	**List $40.00**
HRO Jr. Type JA,	Range 14.0–30.0 mc	**List $18.25**
HRO Jr. Type JB,	Range 7.0–14.4 mc	**List $18.25**
HRO Jr. Type JC,	Range 3.5–7.3 mc	**List $18.25**
HRO Jr. Type JD,	Range 1.7–4.0 mc	**List $18.25**

MCS table model cabinet, 8" PM dynamic speaker and matching transformer **List $18.25**

697 Table power unit; 115 volt, 60 cycle input; 6.3 volt heater and 230 volt, 75 m.a. output, with tube **List $29.50**

See our 1942 catalogue No. 500 for relay rack mounting, coil containers and accessories.

NATIONAL NC-100A
NC-101X



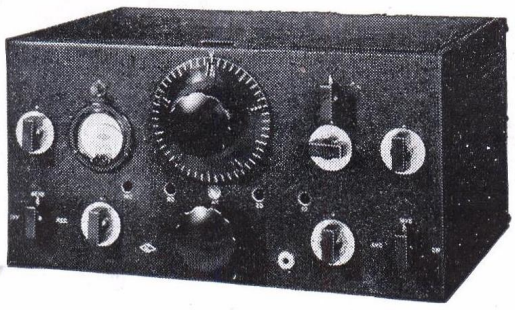

These 11 tube superheterodyne receivers are self-contained (except for the speaker) in a table model cabinet that is readily adapted to relay rack mounting. One stage of R.F. and two stages of I.F. are used. Low loss insulation and high-Q coils give ample sensitivity and selectivity. Separate R.F. and Audio Gain Controls and a signal strength meter are mounted on the panel. Other controls are tone, CW Oscillator, AVC with amplified and delayed action, a B+ switch, and a phone jack. A self-contained power supply provides all necessary voltages including speaker field excitation. The range changing system is unique in that it combines the mechanical convenience of a coil switch with the electrical efficiency of plug-in coils.

All **NC-100** series receivers are fitted with a noise limiter of truly remarkable effectiveness.

The **NC-100A,** illustrated above, covers the range from 540 KC to 30 MC. The large full vision dial is calibrated directly in megacycles and a separate high speed vernier scale provides high precision in logging. The **NC-100XA** is similar but equipped with a crystal filter.

The **NC-101X,** illustrated below, is built strictly for the amateur bands and covers only the following ranges: 1.7–2.05 MC, 3.5–4.0 MC, 7.0–7.3 MC, 14.0–14.4 MC, and 28.0–30.0 MC. The NC-101X is equipped with a crystal filter, S-meter, and the PW type instrument dial.

The **NC-101XA** has the same features as the NC-101X, except for the direct reading dial and the cabinet, which are similar to the NC-100XA.

NC-100A — complete with tubes. AC model — 10" speaker in cabinet. **List $220.00**

NC-100XA — complete with tubes and crystal filter. AC model — 10" speaker. **List $261.25**

NC-101X — complete with tubes. AC model — 10" speaker in cabinet. **List $236.50**

NC-101XA — complete with tubes. AC model — 10" speaker in cabinet. **List $236.50**

See our 1942 catalogue No. 500 for battery models, 12 inch speakers, 200–400 kc range, etc.

NOTE: *Special models of the NC-100 receiver with bands covering a 200–400 KC range are available. Prices furnished upon request. Battery models can be operated from 686 Vibrapak.*

All prices subject to change without notice

NATIONAL COMPANY, INC., MALDEN, MASS., U.S.A.

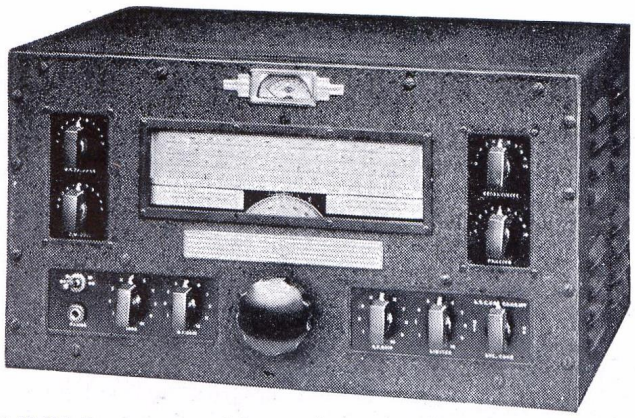

NATIONAL NHU

This specialized communication receiver is a super-heterodyne covering the range from 27 to 62 MC in three ranges, each being calibrated on a direct reading full-vision dial. The circuit uses three acorn tubes, and includes a Noise Limiter, Carrier-off Noise Suppressor, and Amplified and Delayed AVC.

One large knob on the panel slides in or out to engage either the tuning condenser or the range-changing system. Inertia-type tuning is used, with a ratio of approximately 70 to 1. The pointer is positively driven by rack and pinion, and moves vertically when the coil range is changed so that it always points to the proper frequency. The coils are mounted radially in a cast aluminum turret which is easily turned into position by the knob on the panel. Directly above the coil turret is the three-gang straight-line-frequency tuning condenser. The RF circuit and tubes are built completely inside the frame of the condenser, thus making a compact assembly with the shortest possible leads from coils to condensers to tubes.

All features and controls commonly found in high-quality communication receivers are incorporated in the NHU, including a wide range crystal filter.

NHU Receiver, table model, complete with tubes, 8" speaker with cabinet and coils covering from 27 to 62 MC, but without power supply, black finish. **List $302.50**

NHU-20 Receiver, same as NHU but with 20 Meter Coil. **List $319.00**

5856 Power Supply, table model with rectifier, for NHU or NHU-20. **List $32.50**

See our 1942 catalogue No. 50 for battery operation, relay rack mounting, etc.

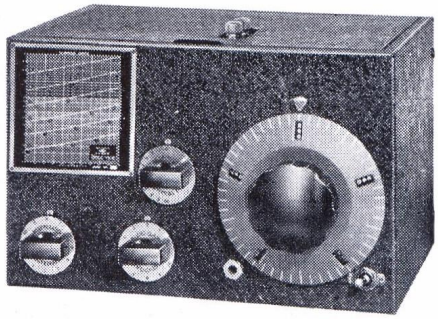

NATIONAL ONE-TEN

The One-Ten Receiver fulfills the need for an adequate receiver to cover the field between one and ten meters.

A four-tube circuit is used, composed of one tuned R.F. stage, a self-quenching super-regenerative detector, transformer coupled to a first stage of audio which is resistance coupled to the power output stage. Tubes required: 954-R.F.; 955-Detector; 6C5-1st Audio, 6F6-2nd Audio.

110 Receiver and 6 sets of coils, without tubes, speaker or power supply. **List $93.50**

5886 Power Supply for above receiver with tube. **List $32.50**

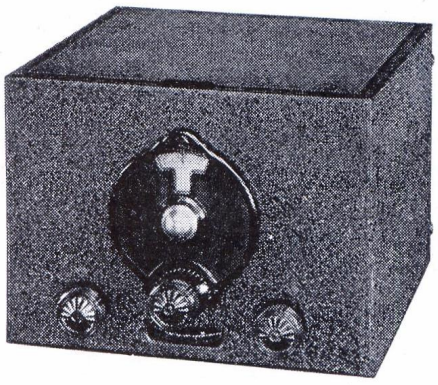

NATIONAL SW-3

The SW-3U Receiver employs a circuit consisting of one R.F. stage transformer coupled to a regenerative detector and one stage of impedance coupled audio. This circuit provides maximum sensitivity and flexibility with the smallest number of tubes and the least auxiliary equipment. The single tuning dial operates a precisely adjusted two gang condenser; the regeneration control is smooth and noiseless, with no backlash or fringe howl; the volume control is calibrated from one to nine in steps corresponding to the R scale.

ONE UNIVERSAL MODEL — The circuit of the SW-3U is arranged for either battery or AC operation without coil substitution or circuit change. Battery operation utilizes two 1N5-G and one 1A5-G tubes. AC operation utilizes two 6J7-G and one 6C5-G tubes. Type 5886 AB power supply is recommended.

SW-3U, Universal model, without coils, phones, tubes or power supply. **List $38.50**

5886-AB, Power Supply, 115 V, 60 cycle, with 80 Rectifier. **List $32.50**

General Coverage Coils

Cat. No.	Range — Meters	List Per Pair
30	9 to 15	$3.85
31	13.5 to 25	3.85
32	23 to 41	3.85
33	40 to 70	3.85
34	65 to 115	3.85
35	115 to 200	3.85
36	200 to 360	4.40
37	350 to 550	4.40
38	500 to 850	5.50
39	850 to 1200	7.25
40	1200 to 1500	7.25
41	1500 to 2000	7.25
42	2000 to 3000	9.50

Band Spread Coils

30A	— 10 meter	$3.85
31A	— 20 meter	3.85
33A	— 40 meter	3.85
34A	— 80 meter	3.85
35A	— 160 meter	3.85

All prices subject to change without notice

NSA HIGH-FIDELITY SPEECH AMPLIFIER

The NSA is an eight tube amplifier capable of delivering 15 watts of undistorted output. Two input circuits with electronic mixer, and with separate gain controls are provided. The low level circuit has a gain of approximately 125 db and is suitable for crystal microphones, etc. The high level circuit has a gain of approximately 70 db, and is for phonograph pickups, etc.

Normal frequency range is 25 to 10,000 cycles within 2 db, but a tone control is provided which permits attenuating high frequencies or low frequencies, or both. Push pull 2A3's are used in the output, with fixed bias obtained from a separate built-in rectifier.

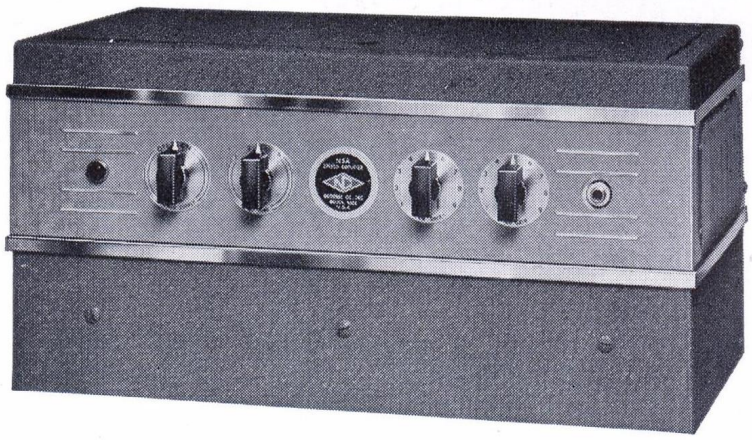

NSA Speech Amplifier, Table Model **List $125.00**

NATIONAL NSM MODULATOR

The new Type NSM Modulator Unit is intended particularly for use with the NTX-30 Transmitter, but its many advanced features make it desirable for any modulating job within its 30 watt rating. Typical among its features are Automatic Volume Compression, DB meter indicating the amount of compression, tone control, and two separate input circuits.

A complete description and listing will be found in our 1942 catalog No. 500.

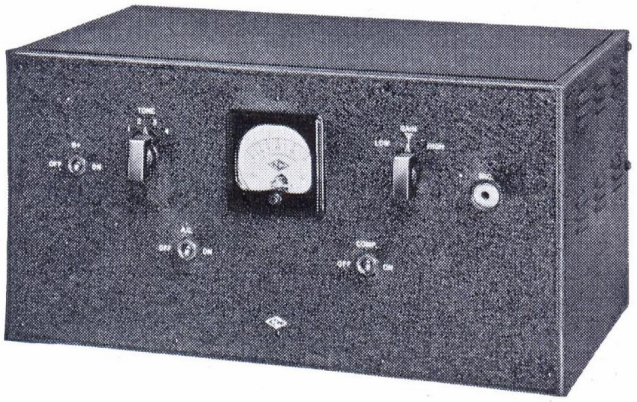

NSM Modulator, Table Model **List $143.00**

NATIONAL NTX-30 TRANSMITTER

The NTX-30 is an exceedingly compact and convenient CW transmitter having an output of 30 watts on 10, 20, 40 and 80 meters. It employs an efficient exciter system and features a special interlocking push switch in the exciter circuits.

For phone an external modulator such as the NSM described above must be used.

The NTX-30 is ideally suited for use as an exciter-buffer combination whenever higher power is desired.

A complete description and listing will be found in our 1942 catalog No. 500.

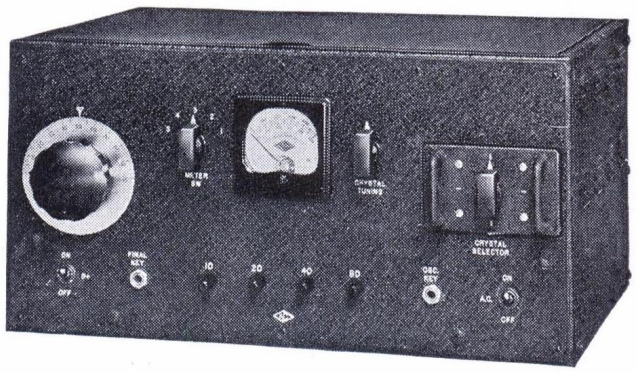

NTX-30 Transmitter, Table Model **List $215.00**

All prices subject to change without notice

NATIONAL COMPANY

61 SHERMAN STREET, MALDEN, MASS., U. S. A.

NATIONAL COMPANY, INC., MALDEN, MASS., U

WORLD'S LARGEST BUILDERS OF AMATEUR COMMUNICATIONS EQUIPMENT

The SKYRIDER "32"



COVERS EVERYTHING ON THE AIR FROM 500 KC. TO 40 MC.

The Skyrider 32 embodies many noteworthy engineering advancements. 13 tubes. Six bands. Two stages preselection on four highest frequency bands. Calibrated band-spread inertia controlled. Micrometer scale tuning inertia controlled. The Skyrider 32 has been engineered by Hallicrafters to produce superior communications receiver performance at a moderate price. Specifications: Frequency Range—Band 1, 500 to 1455 kc. Band 2, 1400 to 2800 kc. Band 3, 2670 to 5800 kc. Band 4, 5.3 to 11.3 mc. Band 5, 10.8 to 23.1 mc. Band 6, 20.8 to 40 mc. 13 tubes. 6 bands. 2 R.F. stages on bands 3, 4, 5, 6. Six step wide range variable selectivity. Push-pull high fidelity audio output. Wide angle "S" meter. Phono jack. Improved signal to image and noise ratio. 80/40/20/10 meter amateur bands calibrated. Temperature compensated high frequency oscillator. Cabinet dimensions: 20½" long, 14¾" deep, 10" high. The Skyrider 32 with crystal and tubes, less speaker. Net **$149.50.** Hallicrafters Jensen bass-reflex enclosure including 12" speaker, 30" high, 16" deep, 22½" wide, $34.50. Hallicrafters Jensen bass-reflex enclosure including 8" speaker, 23½" high, 10¼" deep, 17½" wide, $29.95.

$149.50

the hallicrafters co.

WORLD'S LARGEST BUILDERS OF AMATEUR COMMUNICATIONS EQUIPMENT

The SKYRIDER "28"



SETS A NEW HIGH IN QUALITY PERFORMANCE

15 tubes. Two stages preselection. Calibrated bandspread inertia controlled. Micrometer scale tuning inertia controlled. Tone and AC on-off. Beat Frequency Oscillator. AF gain. RF gain. Crystal phasing. Adjustable noise limiter. Send-receive switch. AVC-BFO switch Bass boost switch. Phono jack. 80/40/20/10 meter amateur bands calibrated. Wide angle "S" meter. Band pass audio filter. Improved signal to image and noise ratio. Push-pull high fidelity audio output. 6-step wide range variable selectivity. Improved headphone output.

Frequency range; 550 to 1610 kc., 1.5 to 3.05 mc., 2.9 to 5.86 mc., 5.75 to 11.5 mc., 10.4 to 21 mc., 20.7 to 42 mc. The Model SX-28 Receiver with crystal and tubes, less speaker. Net **$179.50.** Hallicrafters Jensen bass-reflex enclosure including 12" speaker 30" high, 16" deep, 22½" wide, Model R12 $34.50. Hallicrafters Jensen bass-reflex enclosure 8" speaker, 23½" high, 1¼" deep, 17½" wide. Model R8 $29.95. Shipping weight 87 lbs.

$179.50

the hallicrafters co.

WORLD'S LARGEST BUILDERS OF AMATEUR COMMUNICATIONS EQUIPMENT

New High Fidelity
FM-AM TUNER



FREQUENCY MODULATION
AMPLITUDE MODULATION

High Fidelity Tuner for Frequency Modulation and Amplitude Modulated Broadcaster Section. Eight tubes, frequency range 540 to 1650 kc., 40 to 51 mc. Power output 130 milli-watts undistorted. Power consumption 120 watts. Operates on 115–125 volts, 60 cycles AC. Model S-31 Tuner with 19″ x 8¾″ rack panel. Metal cabinet and tubes, **$74.50**

Model S-31A High Fidelity, 25 watt amplifier, complete with cabinet and tubes, **$54.00**

the hallicrafters co.

WORLD'S LARGEST BUILDERS OF AMATEUR COMMUNICATIONS EQUIPMENT

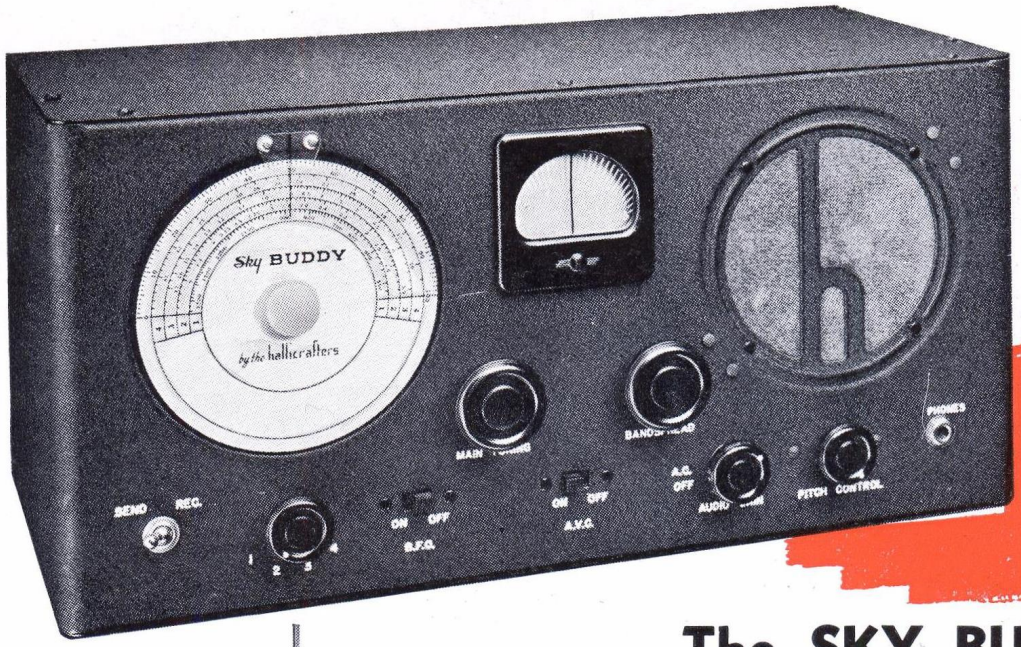

The SKY BUDDY

Designed with the thought of producing a lower price amateur receiver with superior performance. Continuous coverage, 550 kc. to 44 mc. 10 meter band with uniform sensitivity over the entire band. Four bands. Electrical bandspread. Illuminated bandspread scale covering 360°. Built-in 5" dynamic speaker with floating rubber supports. Beat frequency oscillator. Built-in line filter. Six tubes with 8 tube functions. 6K8 converter tube uses separate filter supply for greater stability. Band switch. AVC switch. Send-receive switch. Baked black crackle cabinet 17½" x 8½" x 8½". Amateur net price.....**$32.50**

The SKY CHAMPION

One of the best values ever offered in the communications field. Has all the essential controls for good amateur reception. Nine tubes. Complete coverage (545 kc. to 44 mc.) in four bands. Automatic noise limiter. AVC switch. Standby switch. Inertia bandspread tuning. Separate electrical bandspread. Beat frequency oscillator. Battery-vibrapack, DC operation socket. Dimensions: 18½" long, 8½" high, 9⅜" deep. The Sky Champion (Model S-20R). Shipping weight 32 lbs., **$54.50.** Extra for Univ. 110–250 volts, 25–60 cycles, $5.00. SM-20R carrier level meter, $11.75.



MODEL S–33 SKY TRAINER TRANSCEIVER

Can be used for transmission of ICW by plugging in a key into terminals provided. No additional microphone or handsets required. To transmit, depress switch lever and talk. To receive, release lever. Frequency range (approx.) 112 to 118 mc.; Controls: phono jack, frequency, volume, send-receive switch. Antenna fastens to side of unit. Size: 10" x 6½" x 4¼". Approx. weight 16 lbs., **$29.50.**



the hallicrafters co.

WORLD'S LARGEST BUILDERS OF AMATEUR COMMUNICATIONS EQUIPMENT

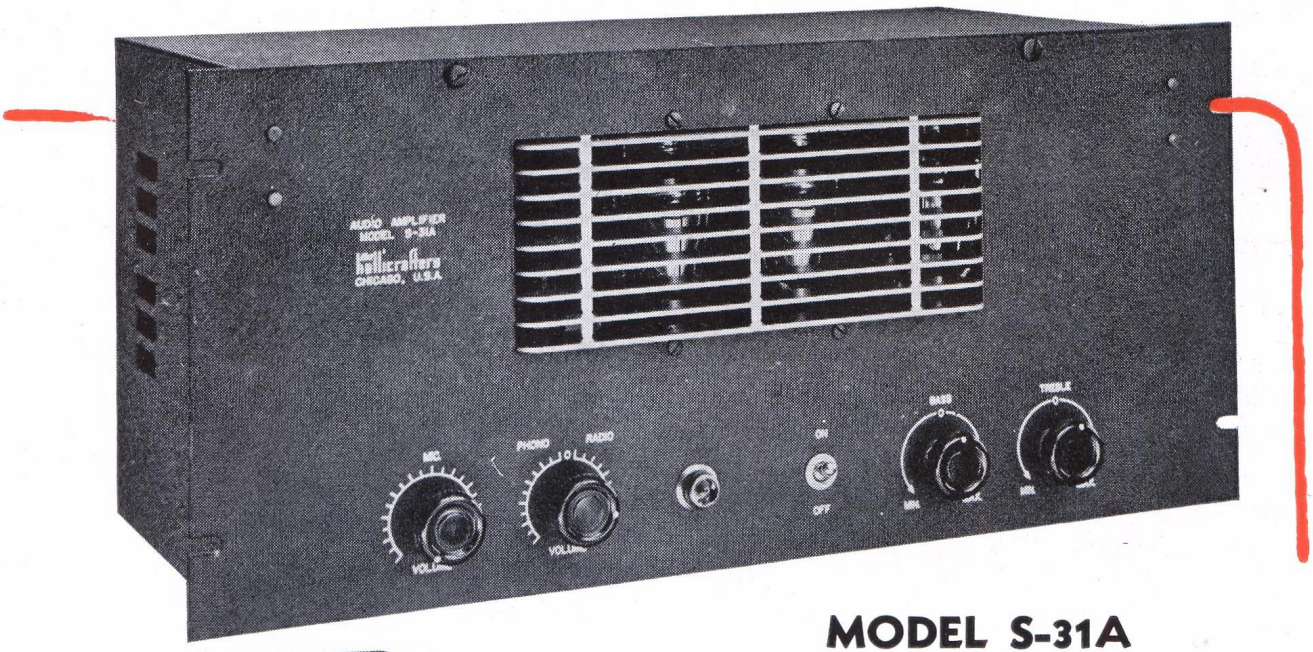

MODEL S-31A

Hallicrafters amplifier, delivers 25 watts of high fidelity audio power to either speaker or 500 ohm load. 6 tubes, fidelity 2 DB from 50 to 15,000 cycles, gain-channel No. 1, microphone (high impedance) 96 DB, channel No. 2, phone (low impedance) 60 DB. Designed for rack panel mounting. Dimensions: Panel, 19″ x 8¾″; Dust cover, 18″ x 8¾″ x 10″. Complete with cabinet and tubes, **$54.00.**

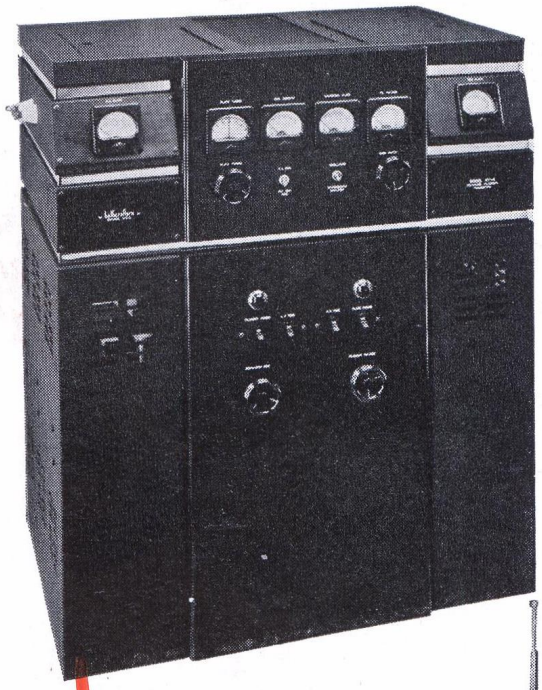

HT-4 450 WATT

The HT-4 is intended for those who want the BEST in an efficient, high-powered rig. The carrier output is 325 watts on phone and 450 watts on CW. Once adjusted to any band the rig may be operated remotely. The transmitter may be set to any three of the 10/20/40/80/160 meter bands. Subsequent selection of any of the three frequencies is by a switch on the front panel. For operation from 110 volts 50–60 cycles AC. Available for special frequencies. Write for prices. Model HT-4—complete with tubes and HT-5 pre-amplifier. Dimensions: 29″ x 19″ x 37″ high. Shipping weight 550 lbs. **$795.00.** Additional set of coils for any one amateur band (10 to 160) $27.50.



S-29 SKY TRAVELER

Use it wherever you are! Truly a universal receiver. Operates on either 110 volts AC or DC or from its self-contained batteries. 9 tubes, 4 bands, covers from 550 kc. to 30.5 mc. Electrical band-spread. 1.4 volt tubes used throughout. Battery life prolonged through a self-contained charging circuit. Approx. battery life 100 hours. Cabinet dimensions: 7″ x 8½″ x 13¼″. Self-contained collapsible antenna. Extends to approx. 3 feet. Weight including batteries 18 lbs. **$69.50.**

the hallicrafters co.

WORLD'S LARGEST BUILDERS OF AMATEUR COMMUNICATIONS EQUIPMENT

The New SUPER DEFIANT SX-25

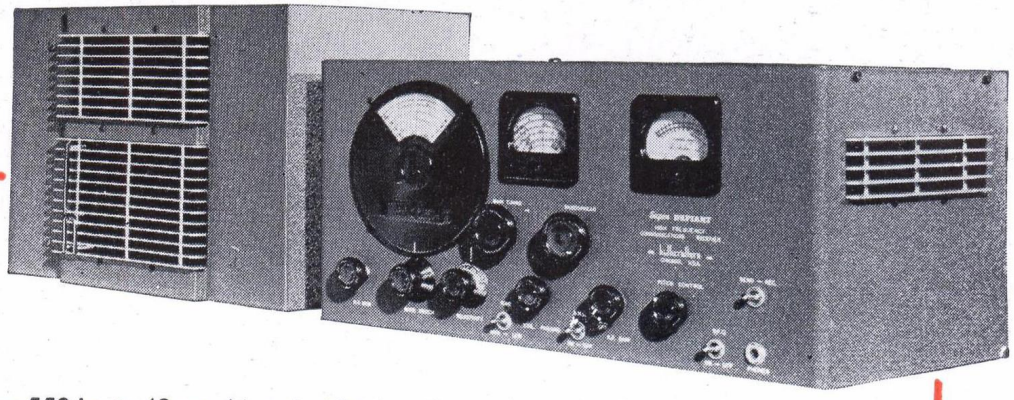

Tunes from 550 kc. to 42 mc. 4 bands, 12 tubes. 2 stages preselection. Separate calibrated bandspread dial for the 10/20/40/80 meter amateur bands provides frequency meter tuning. 10" PM dynamic speaker obtainable in matching metal cabinet. 110 volt 50–60 cycle. Provision for DC vibrapack or battery. Complete with crystal and tubes (less speaker) **$94.50.**



MODEL S-27

General coverage U.H.F communications receiver incorporating both FM and AM in one chassis. Covers 3 bands: 28 to 46 mc.; 45 to 84 mc.; 81 to 145 mc. Switch Changing from FM to AM reception. 15 tubes. 110 volt 50–60 cycle AC. Dimensions: 19" long, 9" high, 14" deep. Model S-27 FM/AM Receiver complete with tubes **$195.00.** Model S-27B covers 36 to 165 mc. **$195.00.**

The SKYRIDER DEFIANT

An exceptional communications receiver value. 9 tubes, 4 bands, frequency range 540 kc. to 43.5 mc. Single-signal crystal filter standard equipment. DC operation socket-battery or vibrapack. Complete with tubes and crystal—less speaker—**$74.50.** PM-23 dynamic speaker with transformer—in sturdily constructed cabinet **$15.00.**



the hallicrafters co.

WORLD'S LARGEST BUILDERS OF AMATEUR COMMUNICATIONS EQUIPMENT

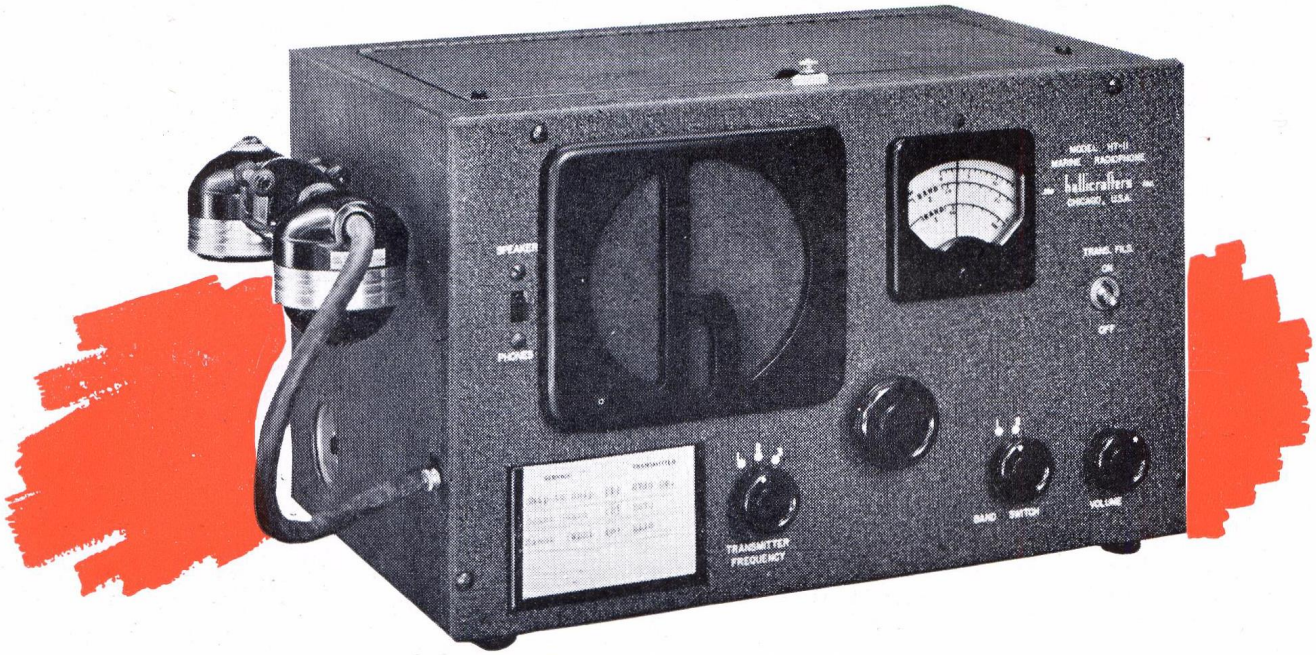

HT-11 MARINE RADIOPHONE UNIT

Ship to shore radio transmitter and receiver. Transmitter operates on 3 frequencies in the marine band of 2000 to 3000 kc. Receiver is manually tuned and covers the standard broadcast band on range no. 1. Range no. 2 covers the marine channels, and separate noiseless vibrapack power supply is supplied for 6 or 12 volt DC operation. Other voltages can be used with suitable converter. **$267.00.** For 110 volt AC operation. **$179.50.**

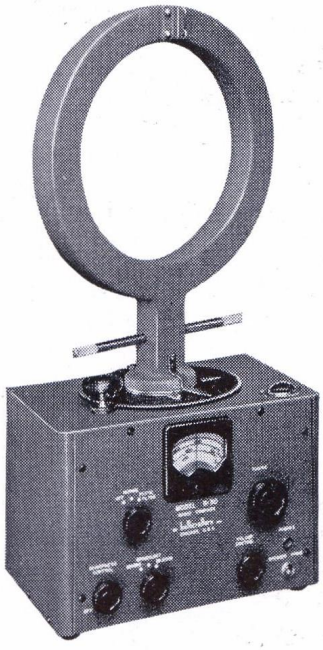

S-30 RADIO COMPASS

Checks your position against beacon, broadcast or shore radiophone stations. Covers: 230 to 550 kc., 550 to 1340 kc., 1220 to 3000 kc. 6 tubes. Power unit consists of thoroughly filtered vibrapack for 6 volt battery operation. 5" PM dynamic speaker available (extra). Complete with tubes, headphones and 6 volt vibrapack power supply **$134.50.** Separate emergency battery box complete $20.00.

HT-7 Frequency Standard

Once set it will maintain its frequency accurately over long periods of time. Unequalled for checking transmitter frequency, and receiver calibrations. Also for calibrating and band-setting receivers, locating signals for skeds, and setting ECO frequency. Operates on 110 volts, 50–60 cycles. Complete with tubes and crystal **$32.50.** Extra for Univ. 110–250 volts, 25–60 cycles $5.00.



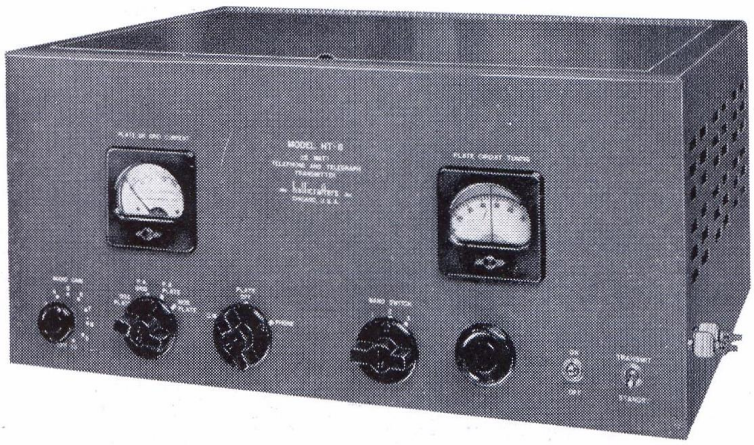

HT-6 25 WATT

Phone and CW transmitter. Power output is 25 watts on most bands. Frequency range is 1.7 mc. to 60 mc. Coils for any 3 bands may be plugged in, pretuned, and then switched at will by a front panel control which properly connects all circuits from crystal to antenna. Model HT-6—transmitter with tubes, less coils and crystals. Shipping weight 67 lbs. (Trano) **$110.00.** Coils for 160, 80, 40, 20 meter operation, each set, $6.00. E.C.O. unit for 160, 80, 40, 20 meter operation for corresponding coils listed above, each $4.50. Set of coils for 5 or 10 meter operation on twice crystal frequency each set $8.50. Random Frequency Crystal for 160, 80, 40 meters, each $4.80. Random Frequency Crystal for 20, 10 and 5 meters, each $5.75. Extra for 220 volt 50–60 cycle operation, $9.50.

the hallicrafters co.

WORLD'S LARGEST BUILDERS OF AMATEUR COMMUNICATIONS EQUIPMENT

HT-12 MARINE RADIOPHONE UNIT

A 50 watt radiophone that answers every marine radio need! Power supplies available for operation on 12–32–110 DC and 110 volts 60 cycles AC. Gives you ship-to-ship, coast guard and ship-to-shore communications wherever you cruise. Dimensions of radiophone: 20½" high, 19¼" wide, 12" deep. Complete with tubes, less crystals and installation but with power supply for 110 volt 50/60 cycles, **$475.00.** Model HT-12: same as above but for 32 or 110 volts DC operation as specified, **$580.00.** Model HT-12: Same as above but for operation from 12 volts DC, **$605.00.**

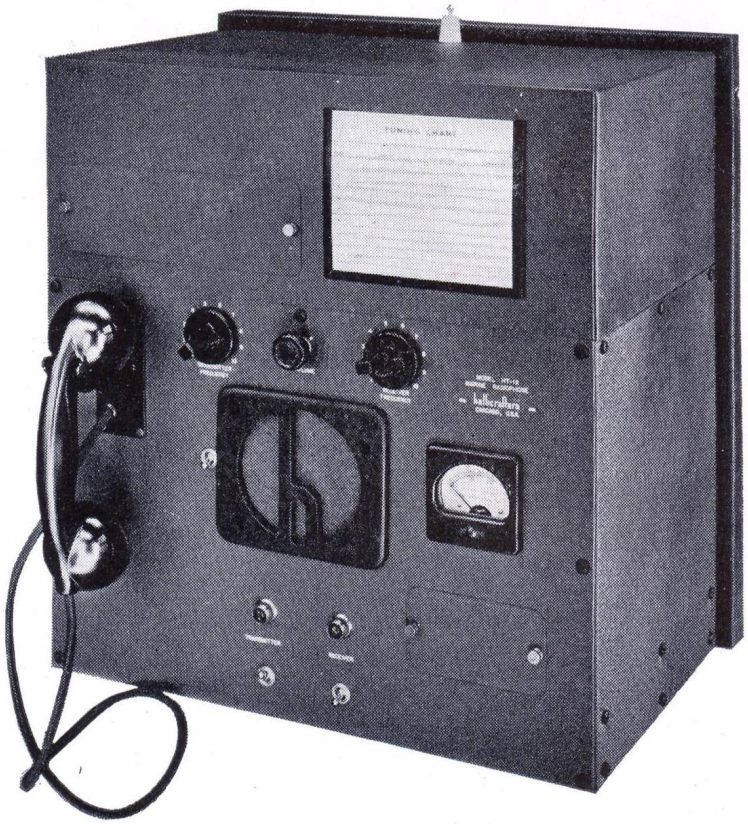



The HT-9

100 watt transmitter. 5 frequency phone and CW unit, rated at 100 watts on CW and 75 watts on phone (carrier output). Complete with tubes, but less crystals and coils. Shipping weight 165 lbs., **$225.00.** 160, 80, 40 meter coils (for operation on crystal frequency) each set, $9.50. 20, 10 meter coils (for operation on twice crystal frequency) each set $10.50. 160, 80, 40 meter crystals, each $4.80. 20 meter crystals (for 10 meter operation), each $5.75.

HT-8 25 Watt RADIOPHONE

The ideal radiotelephone transmitter-receiver unit for any type of craft. Transmitter covers 5 frequencies, the receiver 6 frequencies. Complete with tubes, separate power supply for 12, 32, or 110 volts DC (all operate on 110 volts 60 cycles AC). Less crystal and installation, 110 volts AC, **$325.00.** 32 volts and 110 volts DC. **$385.00.** 12 volts DC, **$417.50.**





The SKYRIDER MARINE S-22R

Designed for marine service in the range from 16.2 to 2150 meters. Built for 110 volts AC-DC operation. Also may be operated from 6-volt battery supply with the addition of a Model No. 320 Electronic Converter. Dimensions 18½" x 9¼" x 8½" high. The Skyrider Marine (Model S-22R). Complete with tubes and speaker. Shipping weight 31 lbs.....**$74.50**

the hallicrafters co.

CHICAGO, U. S. A.

EMERGENCY

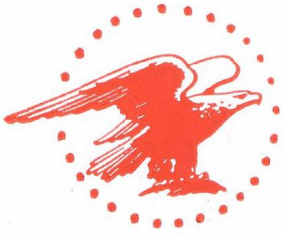

Uncle Sam calling. **A national** emergency this time . . . unlimited. It took a lot of black headlines and some strong legislation before most Americans were awakened, stirred to action. But not the amateur radio operator. Like the Navy, he is always ready. Emergency is, in fact, his middle name.

Today no branch of the Service is without its amateur radio operators. Hams have been called to active duty in the U. S. Navy, the Merchant Marine, the Army Signal Corps, the FBI. Still other amateurs are standing by, at their posts, awaiting special orders. Indeed, when the history of this war is recorded, the American ham—his readiness, willingness and fitness to help get on with the job of building a strong national defense through an efficient armed force —must rank high among citations for distinguished service.

The qualified amateur, answering the call to the colors, is already trained. He knows the Code. He knows too, because his middle name is Emergency, how important in radio

why that's a ham's middle name!

communication is dependable equipment. And so C-D capacitors, having served so many amateur radio operators so faithfully for so many years, today are serving Uncle Sam. Cornell-Dubilier experience—the longest experience back of capacitors—is responsible for the amazing dependability of C-Ds. Next time you need capacitors, specify Cornell-Dubilier. You can depend on them more than ever for **they're in the Army now!** Address Cornell-Dubilier Electric Corp., 1013 Hamilton Blvd., South Plainfield, N. J.

CORNELL - DUBILIER

ELECTRIC CORPORATION

SOUTH PLAINFIELD, N. J. NEW BEDFORD, MASS.

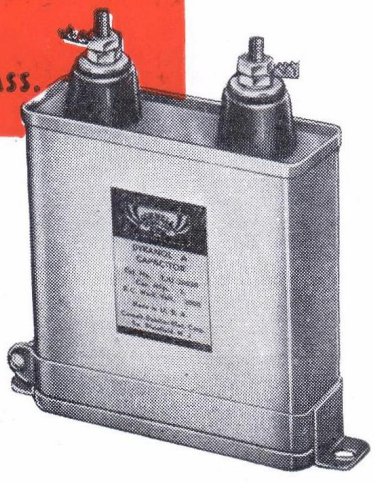

THE MOST DEPENDABLE units the amateur can choose are Cornell-Dubilier type TJU Dykanol Capacitors. These are the capacitors practically every broadcast and government station in the world uses with signal success. Safely rated, compact and lightweight, they are standard equipment with thousands of amateurs.

Choose America's Finest Semi-Automatic Telegraph Keys

Standard of the world for Clarity . . . Speed . . . Sending Ease

Genuine **VIBROPLEX**

Reg. Trade Marks. Vibroplex, Bug, Lightning Bug

The BUG trade mark identifies the Genuine Vibroplex.

The "CHAMPION"

ONLY **$9.95**

The greatest value in Vibroplex history. Like all true champions—this key defies competition. Amazingly easy to operate, professionally fast and built to last. Standard size black crackle base. Chromium plated parts. 3/16" contacts. Without circuit closer, cord and wedge.



Prices subject to change without notice.

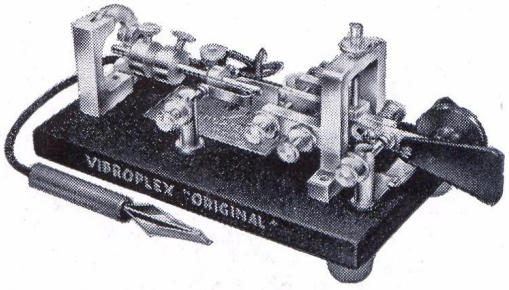

VIBROPLEX has been making fine semi-automatic (*Bug Type*) keys from the beginning of Bug sending. So it must mean something when we tell you that these keys are the finest we have ever produced. They place at your command a degree of sending performance which we believe is unapproachable by any other key. The Vibroplex key has pleased over 110,000 Radio and Morse operators and it can be depended on to please you. Choose Vibroplex—and you choose the finest.

ORIGINAL model. Here's an old favorite and one of our fastest sellers. And no wonder—it has become famous the world over for its smooth, effortless action, superior signal, durability and wide speed range. We know of no finer key for any telegraph purpose. Standard finish. Black crackle base. Highly polished chromium machine parts. Precision construction including DIE CUT contact and main spring. 3/16" contacts. Complete with circuit closer, cord and wedge..... **$15.95**

De Luxe finish **$19.50**

LIGHTNING BUG model. Here's a key that gives TOP performance wherever used. Has many advanced features not found in any other key, including new design frame, improved flat pendulum, instantly adjustable dot contact spring, bridged damper frame and many others, all of which mean easier manipulation and greater sending satisfaction for the operator. Standard finish. Black crackle base. Polished chromium machine parts. Precision construction including DIE CUT contact and main spring. 3/16" contacts. Complete with circuit closer, cord and wedge **$13.95**

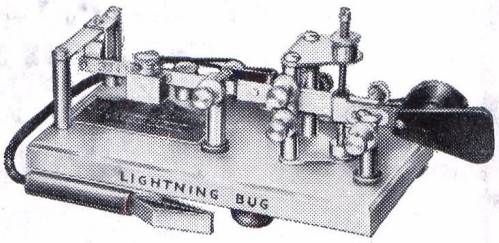

De Luxe finish **$17.50**

BLUE RACER model. This is a great little key. About half the size of large models. Compactly built, smart in appearance and capable of the finest sending performance. Standard finish. Black crackle base. Polished chromium machine parts. Precision construction including DIE CUT contact and main spring. 3/16" contacts. Complete with circuit closer, cord and wedge..... **$15.95**

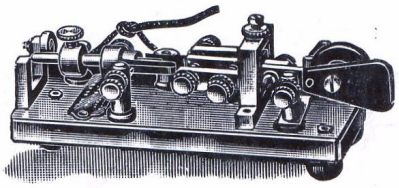

DeLuxe finish..... **$19.50**

The original, Blue Racer and Lightning Bug models are also available in De Luxe finish. Have highly polished chromium base and machine parts. Colorful red switch knob, finger and thumb piece. Green silk cord and wedge. Extra large contacts. And in addition to the advanced features which have made Vibroplex keys famous—De Luxe keys are also equipped with **PATENTED JEWEL MOVEMENT**—a feature found only in De Luxe keys which gives the operator better control, enhances his natural ability and reduces sending effort to the minimum. By any standard, by any measurement, Vibroplex De Luxe keys represent sending at its easiest and best. Remit by money order or registered mail.

Write for FREE illustrated catalog showing complete line of Vibroplex keys.

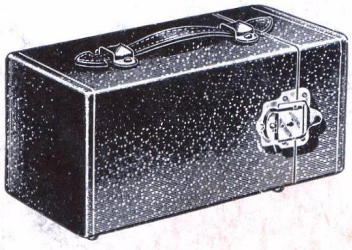

CARRYING CASE

Handsome black morocco. Reinforced corners. Flexible leather handle. With patent lock and key, **$3.50.** Zipper case, flexible. Genuine leather, **$2.00.**

THE VIBROPLEX CO., Inc.

833 Broadway **New York, N. Y.**

J. E. Albright, President

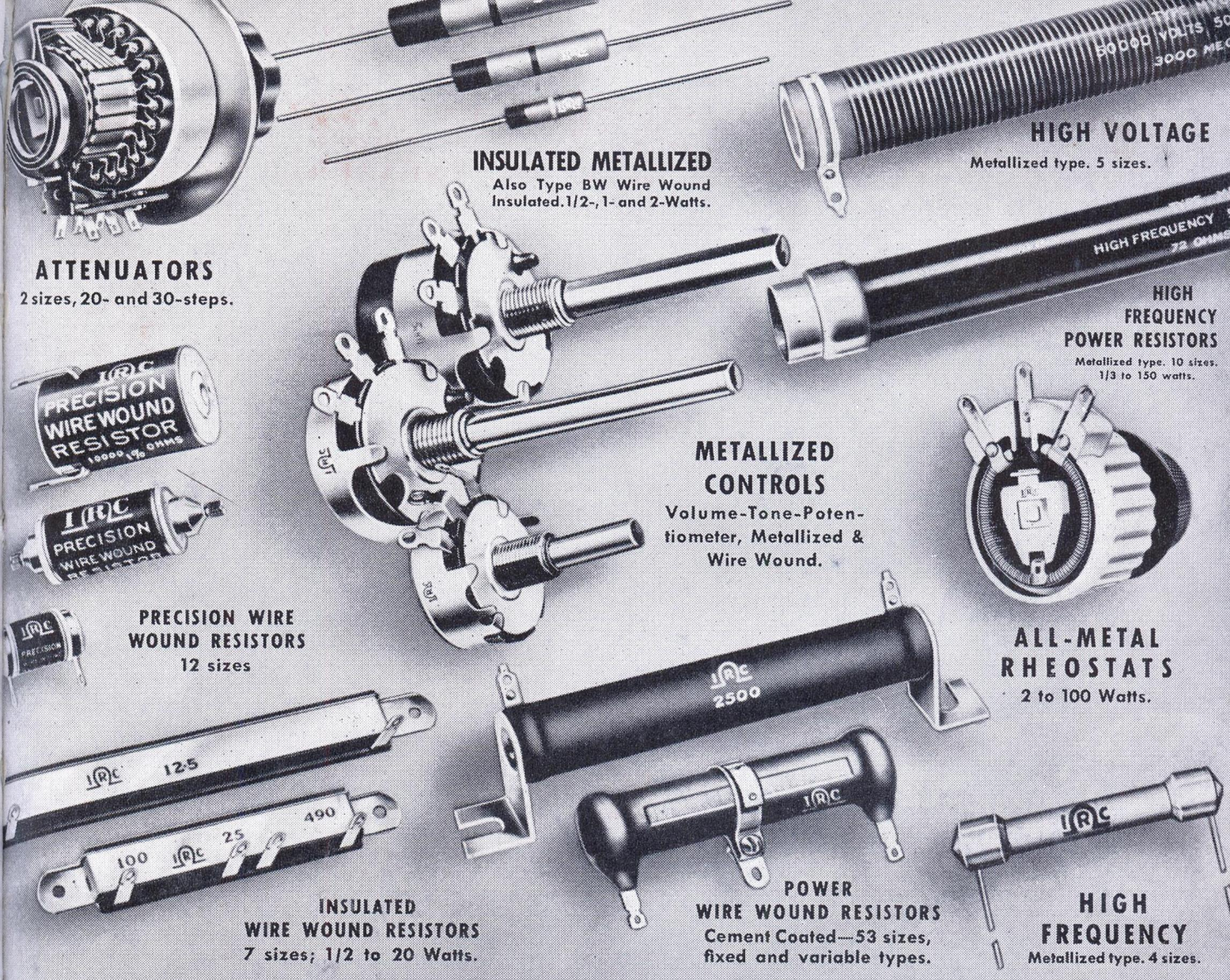

SPECIALIZATION

For 18 years, the entire IRC organization has focused its research work, its ability and energy exclusively upon the manufacture of fixed and variable resistors. This long-continued specialization is responsible for IRC's world-wide reputation for engineering achievement and thorough knowledge of resistor problems.

From the humblest grid leak in your rig to the control or rheostat on your panel, or to the biggest, hottest 200-watter in your power supply, the trademark "IRC" is your assurance of dependability, long life and trouble-free performance.

INTERNATIONAL RESISTANCE CO., 401 N. BROAD ST., PHILADELPHIA

Makers of Resistance Units of More Types, in More Shapes, for More Applications Than Any Other Manufacturer in the World.

IRC

RADIO TELEGRAPH APPARATUS *Manufactured by*

WORLD'S CHAMPION RADIO TELEGRAPHER

PRICE $90.00 Net

G-813 is complete as shown Keyer and Tape Puller

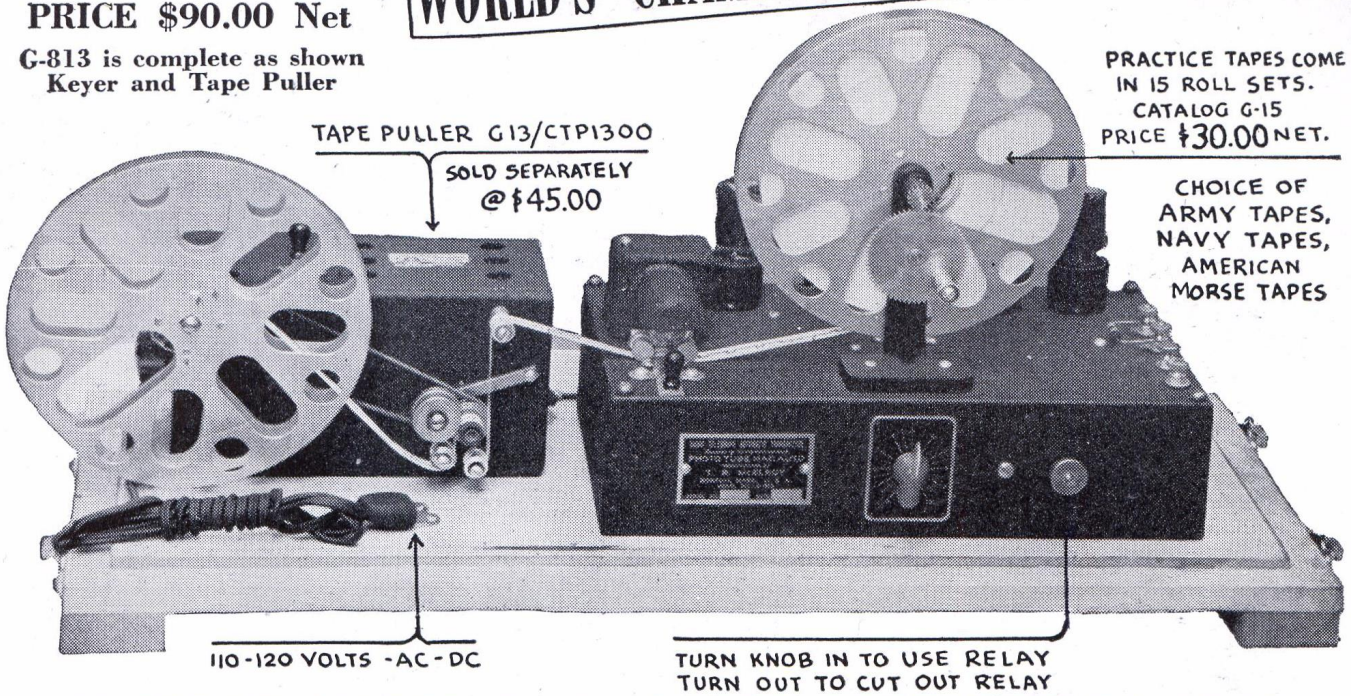

McELROY MODEL G-813 RADIO CODE KEYING UNIT

Designed for radio operator training schools of the United States Army.

Dots and dashes are inked on regulation telegraph recorder paper slip 3/8" wide. These recordings resemble the conventional visually read slip, excepting the pen is heavier which results in an inked line about 1/16" thick and the ink used is a black India drawing ink. Paper slip is mounted on 400' 16mm, motion picture reels, each roll containing sufficient inked slip to operate the keyer at speed of 20 words per minute for one hour.

Paper slip is drawn through a guiding gate between an exciter lamp and a photo tube. The inked dots and dashes interrupt light onto photo tube, actuating a relay which keys any external tone source.

Practice tapes consist of a set of fifteen rolls prepared from master tapes furnished by Signal Corps School, Fort Monmouth, N. J. Best results will be obtained if the keyer is used in collaboration with Signal Corps School Pamphlet No. 53, Radio Operator's Manual, 1940 Edition.

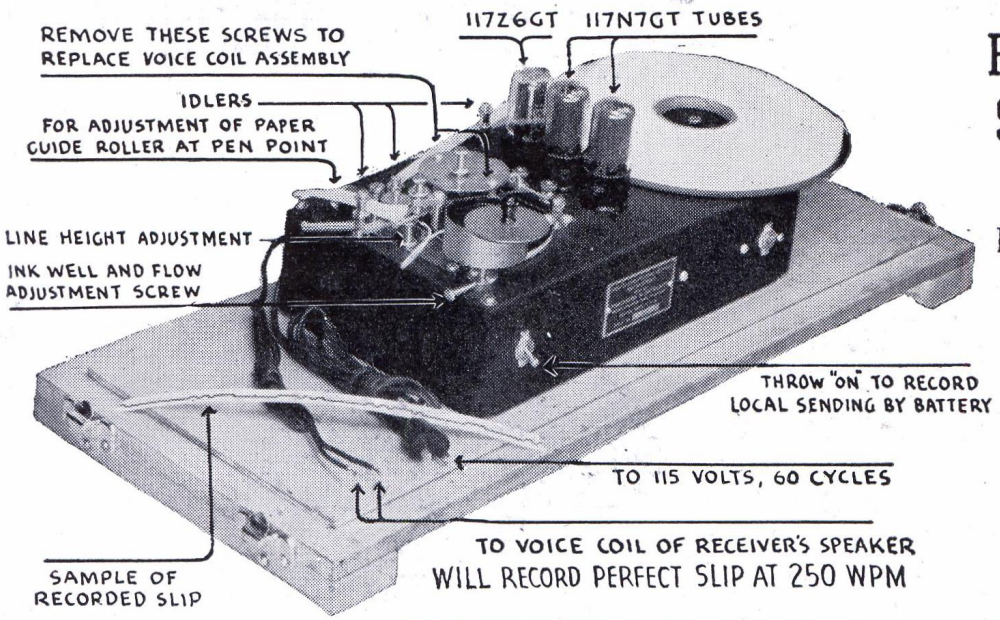

RADIO TELEGRAPH SIGNAL RECORDER MODEL RRD-900

PRICE $90.00 Net

This is a device designed to make inked recordings of transmitted dots and dashes of the radio telegraph code. Amplifying circuit and copperoxide rectifier are built into the unit. Circuit diagram accompanies each instrument. Slip is drawn through recorder by tape puller such as the G-13.

T. R. McElroy

MAC

100 BROOKLINE AVENUE **BOSTON, MASS.**

RADIO TELEGRAPH APPARATUS *Manufactured by*

WORLD'S CHAMPION RADIO TELEGRAPHER

NEW SUPER STREAM-SPEED

PLATINUM
Dot Contacts

S-600 PC
$11.85

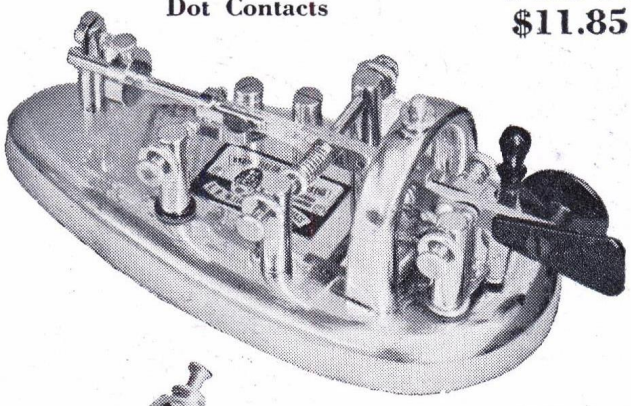

Into this gorgeous speed key has gone Mac's 30 years operating experience supplemented by the finest engineering ability in the radio-telegraph industry . . . with their combined efforts coordinated under the styling genius of one of America's outstanding design artists. See it! Handle it! You'll have to own it! Combining beauty and utility in a most striking fashion, this radically new, semi-automatic key is the last word in operating ease. Fast, rhythmical Morse is a real pleasure with this key.

- Streamlined base of special dense alloy. Wt. 4 lbs.
- Tear-drop shaped base makes it immovable on table.
- Heavily chromed with bluish tinge to prevent glare.
- Swedish blued steel mainspring and U spring.
- Bronze bearing screws.
- Bronze alloy pigtail.
- Bakelite insulation throughout.
- Molded plastic dot paddle and dash button.

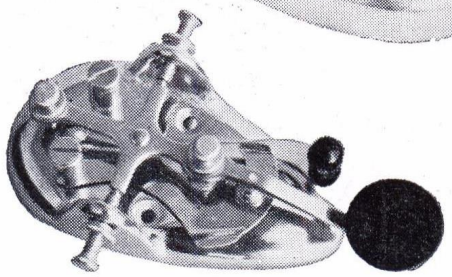

STREAM KEY DE LUXE MODEL

No. 300 at $3.45 net.
No. 200 at $2.25 net.
No. S-100 at $1.65 net.

Beautiful tear-drop streamlined base with heavy bluish tinged chrome. All parts chromed. Finely balanced key lever. 3/16" contacts, designed expressly for these keys. These pretty Streamkeys have a "feel" that makes good Morse easy for any operator.

PRACTICE SET CATALOG NO. S-710—$10.50 Net

Complete with tube

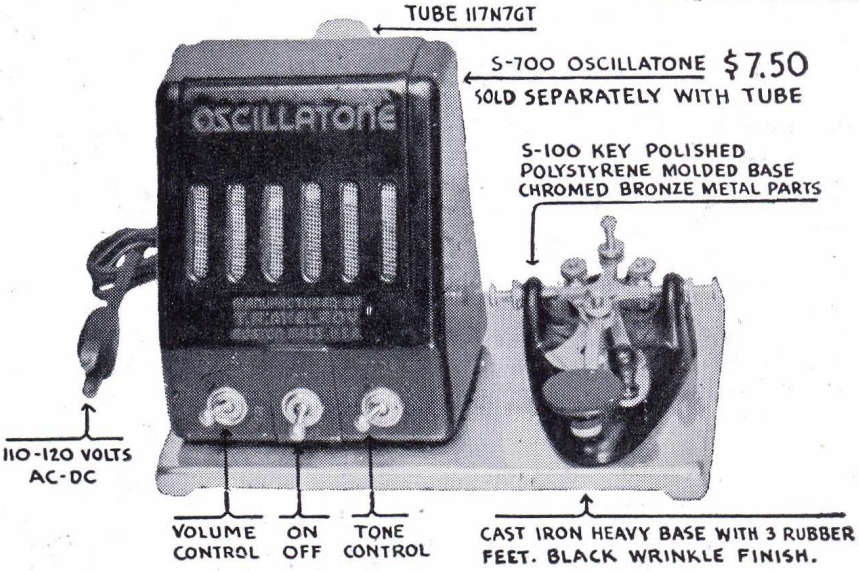

PROFESSIONAL MODEL, same key but base "black wrinkled." CATALOG No. 200

AMATEUR MODEL, rich black polystyrene base, same lever, and large contacts, circuit closing switch, bronze bearing screws. A beautiful and superbly balanced key at an absurdly low price because of enormous volume. CATALOG No. S-100

PROFESSIONAL MODEL, MAC KEY

Designed to conform with United States Navy specifications for "speed key." It is just what its name implies: A fine Professional Operator's model Mac Key. Base 3¾" x 6½" x ¾" thickness. Beautifully black wrinkled over Parkerized base casting. Carefully designed super-structure, similarly finished.

Chromed parts, circuit closer, bakelite insulation, 3/16" silver contacts. A key that will thrill any radio or telegraph operator.

TELEGRAPHER'S MODEL
CHROMED YOKE, CORD.
CP500 @ $9.50

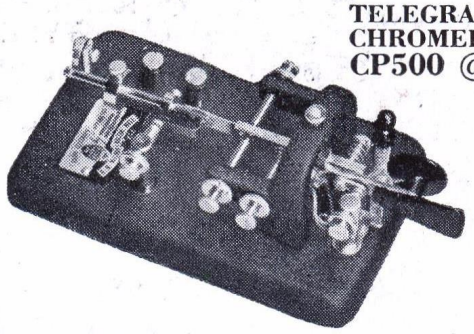

MODEL
No. P500
$7.50
NET TO THE OPERATOR

T. R. McElroy

100 BROOKLINE AVENUE **BOSTON, MASS.**

BLILEY



40 METERS
TYPE B5



STANDARD FREQUENCY
100KC. CRYSTAL UNIT
TYPE SOC100

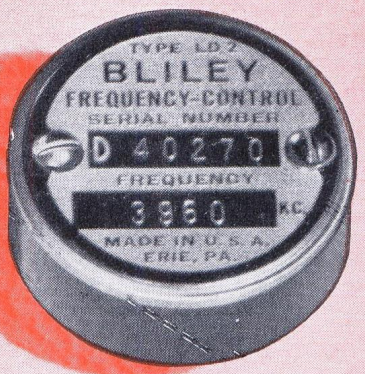

80-160 METERS
TYPE LD2



40-80-160 METERS
TYPE BC3

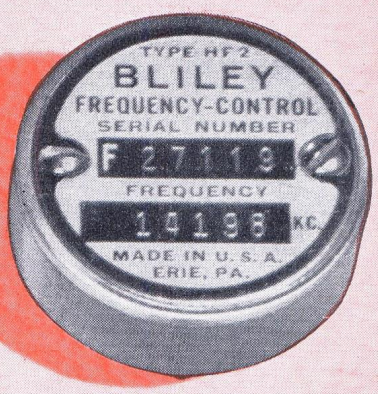

20 METERS
TYPE HF2

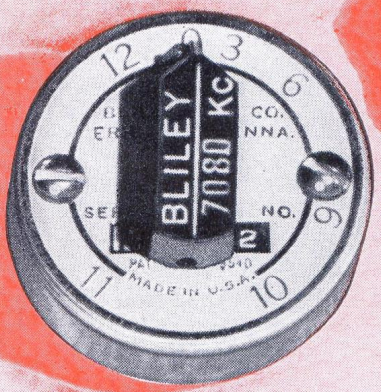

40-80 METERS
VARIABLE FREQUENCY
TYPE VF1

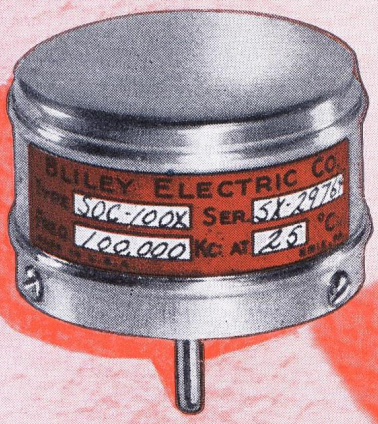

STANDARD FREQUENCY
100KC. CRYSTAL UNIT
TYPE SOC100X

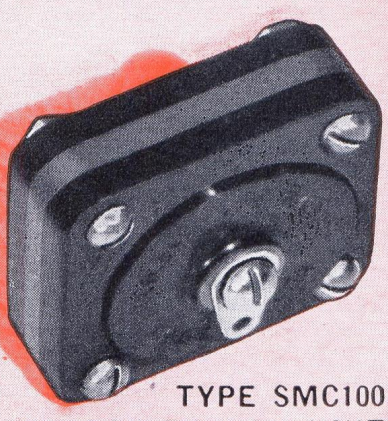

TYPE SMC100
CALIBRATOR CRYSTAL UNIT
100KC.—1000KC.

GENERAL COMMUNICATION FREQUENCY CRYSTAL UNITS

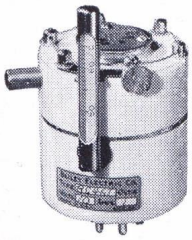



Engineered Reliability
Guaranteed Accuracy





SEE CATALOG G-12

CRYSTALS

TYPE B5

Thoroughly engineered in every detail, this compact unit represents the best in a mounted, low-drift, high-frequency quartz crystal. Each crystal is manufactured under rigid standards and has a temperature coefficient not exceeding ±4 cycles/mc./°C.

Price—40-meter band, within ±5kc. of specified kc.* . $4.80
—at specified integral kc. . $5.90

TYPE BC3

This popular, economically priced crystal unit is fully reliable in every respect. The accurately cut crystal has a high activity with a frequency drift of only 23 cycles/mc./°C. Heat, developed by the crystal, is dissipated by the stainless-steel holder cover-plate thereby reducing actual frequency drift.

Price—40 or 80-meter band, within ±5kc.* . . . $3.35
—at specified integral kc. . $4.95
Price—160 meters, within ±10kc. $3.35

TYPE VF1

Avoid QRM by frequency selection. The frequency of the VF1 Variable Frequency Crystal Unit is continuously variable up to 6kc. with the 80-meter unit, or 12kc. with the 40-meter unit. When multiplying, the range is proportionately increased. The specially finished crystal has a drift of less than ±4 cycles/mc./°C. and an activity only somewhat less than that of high activity fixed-frequency crystals.

Price—40-meter band, *minimum* frequency within ±15kc. of specified $6.60
—within ±5kc. $8.50
Price—80-meter band, *minimum* frequency within ±5kc. . $6.60
Price—at specified integral kc. . $8.50

TYPE LD2

The outstanding crystal unit for the 80 and 160-meter bands. It incorporates a powerful, highly active crystal with a frequency drift of less than ±4 cycles/mc./°C. Correctly designed and carefully manufactured, this time-proven unit provides accurate, dependable frequency control.

Price—within ±5kc. of specified kc.* $4.80
Price—at specified integral kc. $5.90

TYPE HF2

Frequency multiplication in 2½, 5, 10 or 20-meter transmitters is minimized with this dependable 20-meter crystal unit. It has high activity comparable to lower frequency crystals and can be used in any conventional triode, pentode or tri-tet oscillator. Physical ruggedness is accomplished through the harmonic vibrating principle. Frequency drift is +20 cycles/mc./°C.

Price—20-meter band, within ±15kc. of specified kc.* . $5.75
Price—14.4 to 15.0mc., within ±30kc. of specified kc.* . $5.75

TYPE SMC100

Frequency checking, calibrating receivers and signal generators, or performing general frequency measurements is easy with a 100kc. —1000kc. frequency standard. A few stock parts and an SMC100 Dual-Frequency Crystal Unit is all that's needed for construction.

Price $7.75

TYPE CF1

The Bliley CF1 Crystal Filter Unit, with its high Q and freedom from spurious responses, assures maximum receiver selectivity and minimum signal loss.



Price—456kc., 465kc. or 500kc. I-F. $5.50
Price—1600kc. I-F. $9.50

TYPE SOC100

This precision-manufactured, knife-edge mounted, 100kc. bar is designed for use in primary or secondary standards of frequency where high stability and accuracy is essential. The crystal has a temperature coefficient of ±3 cycles/mc./°C. maximum.

Price—calibrated at room temp. . $15.50
Price—at specified oven temp. . $21.00

TYPE SOC100X

A knife-edge mounted 100kc. X-cut bar for applications not requiring the high accuracy and stability of the SOC100 Unit. Temperature coefficient is (—) 10 cycles/mc./°C.

Price—calibrated at room temp. . $9.50
Price—at specified oven temp. . $15.00

*Or choice from dealer's stock

Engineering Bulletin E-6, FREQUENCY CONTROL WITH QUARTZ CRYSTALS, is a handbook on crystal control. Price, 10¢ (Canada and foreign, 15¢). Descriptive catalogs of Bliley Crystal Units are available at no charge.

Quartz crystals for frequency control and special applications are manufactured for all frequencies from 20kc. to 30mc. Bliley Broadcast Frequency Crystals are approved by the F. C. C. Ask for Catalog G-12.

All prices shown are net in U. S. A. and are subject to change without notice.

There is a
BURGESS BATTERY
FOR EVERY PURPOSE

You will find no lazy, inactive cells in Burgess Batteries! First-grade material in carefully selected, tested cells are responsible for Burgess quality. Longer, dependable service, resulting in more economy, makes Burgess the first choice of amateur, engineer, and scientist. Satisfy yourself on the next dry battery that you need, by specifying Burgess.

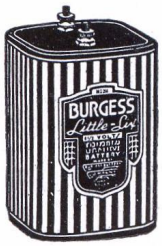

No. 4FA Little Six —1½ volts—replaces one round No. 6. Radio "A" type, is recommended for the filament lighting of vacuum tubes.
Size, 4 15/16" x 2 5/8" x 2 5/8".
Weight, 1 lb. 6 oz.



No. F2BP — A small 3-volt "A" battery used in portable transceivers, radio test instruments, and portable lighting equipment. Equipped with screw terminals and insulated junior knobs. Size, 1 5/16" x 2 5/8" x 4 7/16".
Weight, 12 oz.

No. 2FBP — A small 1½ volt "A", designed for radio test instruments, portable amplifiers, and radios requiring 1½ volts for the "A" circuit. Equipped with screw terminals and brass knurled nuts. Size, 1 5/16" x 2 5/8" x 4 7/16". Weight, 12 oz.



No. 44 — A special 1½ volt dry cell. Ideal for microphones, laboratory and surgical instruments, and portable radios. Screw terminals and brass knurled nuts. Size, 1 7/8" diameter x 4 25/64" overall height.
Weight, 10 oz.

No. F4BP — A 6-volt heavy-duty portable battery, designed for Burgess X109 headlight. Contains four F cells connected in series. Screw terminals and brass knurled nuts. Size, 2 21/32" x 2 21/32" x 4 7/32". Weight, 1 lb. 6 oz.





No. 5360 — A very compact 4½ volt "C" battery designed for portable use. Brass posts, contacts, and nuts. Size, 3" x 13/16" x 2 5/8". Weight, 5 oz.

No. Z30N — 45 volt "B" battery. Improved small size. Adapted to radio, portable receivers and transmitters. Screw terminals. Size 3" x 1 7/8" x 5". Weight, 1 lb. 4 oz.



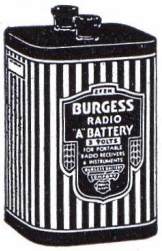

No. 2F2H — A 3-volt radio "A" battery used with portable radios, amplifiers, and special instruments. Size, 2 5/8" x 2 5/8" x 4 3/8". Weight, 1 lb. 6 oz.

No. W30BPX—45 volts. Extremely small and light in weight. Very suitable for personal transceivers used by amateur clubs and radio stations. Equipped with insulated junior knobs. Size, 1 7/32" x 2 29/32" x 4 1/16". Weight, 10 oz.

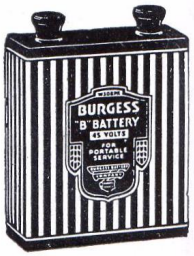

No. 2308—A 45 volt super-service standard size radio "B". Built to deliver maximum service for medium size battery. Designed for receivers with plate current drain of 10 to 15 milliamperes. Size, 7 1/8" x 8" x 2 7/8". Weight, 7 lbs. 6 oz.

No. M30—A small light weight 45 volt "B" battery for use in portable radios. Universal size; will fit the majority of portables on the market today. Size 5 5/8" x 3 9/16" x 1 7/8". Weight, 1 lb. 10 oz.





No. XX45 — Light weight and compact. 67½ volts. An ideal portable battery. Designed for all "personal" radios. Size 2 21/32" x 1 11/32" x 3 11/16". Weight, ¾ lbs.

The Amateur's Friend **BURGESS** *The Engineer's Choice*

FOR FURTHER INFORMATION, WRITE BURGESS BATTERY COMPANY, FREEPORT, ILLINOIS

AMPHENOL

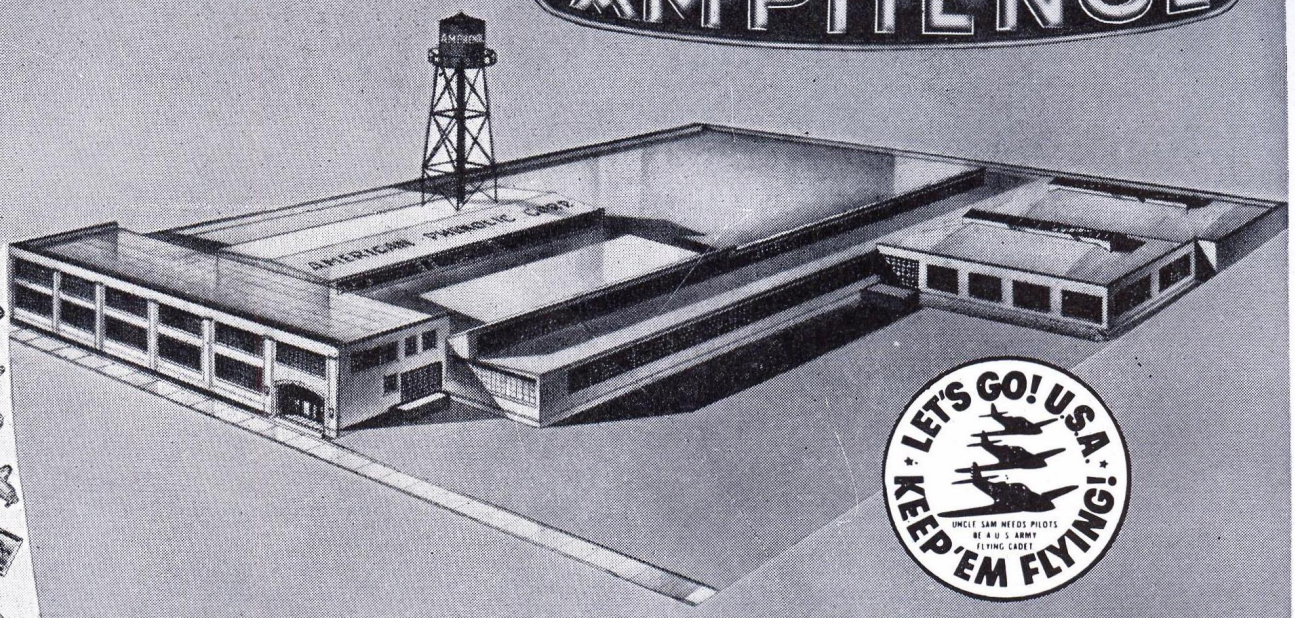

A FLOOD OF ELECTRONIC MATERIAL

For Uncle Sam's Army, Navy, Marine and Air Corps

Day and night a flood of materials is being poured out of the American Phenolic factories for the radio and electrical wiring of our country's land, sea and air machines. There can be no let up in the filling of these defense orders.

However, amateur radio is important, too. It is partly responsible for the vital position radio occupies today, and in time of war the Radio Shack is almost sure to become the listening post of our government. Therefore, we believe it is very necessary to keep the amateur supplied so that he may continue his good work and be ready for duty in time of emergency.

To meet all needs we have acquired a new manufacturing plant and have further constructed a new building to greatly increase our production facilities. While we can make no definite promises for the future in these uncertain times, we do know that today

YOUR JOBBER HAS MOST AMPHENOL PARTS IN STOCK.



Write for Catalogs

CATALOG No. 65—Complete listing of Amphenol radio products, including ultra-low-loss cables and insulation.

CATALOG No. 70—Army-Navy cable connectors and conduit fitting for aircraft and radio.

Army-Navy CONNECTORS and FITTINGS

CO-AXIAL CABLES

COIL FORMS

Low-Loss INSULATORS

Radio CONNECTORS

Tube SOCKETS

Low-Loss ROD SHEET and TUBE

AMERICAN PHENOLIC CORPORATION

CHICAGO, U. S. A.

The Ideal Source of Plate Voltage Where Commercial Electric Power is not Available

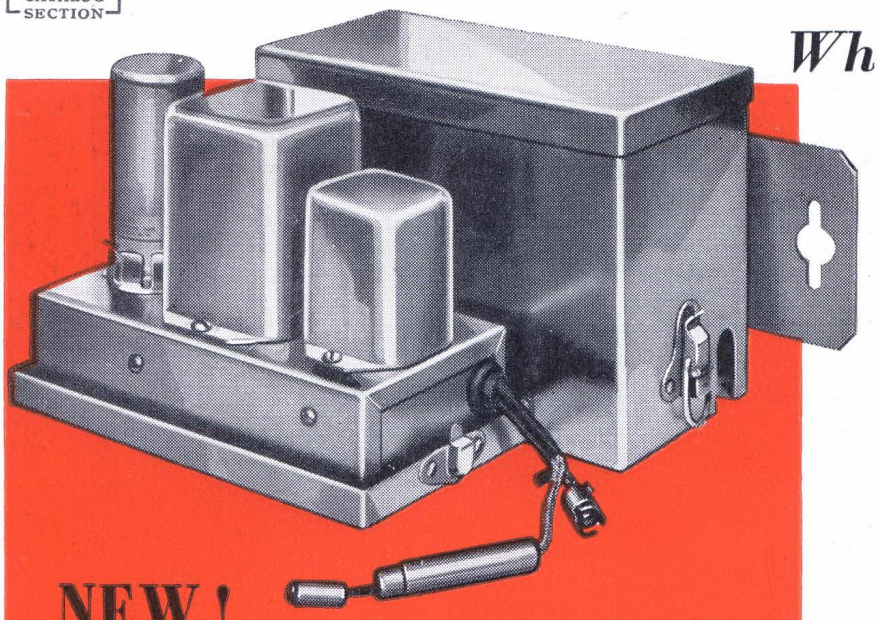

NEW!

Vibrapack VP-540. Designed for use as a complete "B" power unit for auto, airplane and marine service. May be used to operate long-wave, broadcast-band, and short-wave receivers within its load capabilities. Completely filtered for both RF and audio. Universal mounting. Nominal input, 6.3 volts; output, 250 volts at 60 ma. Self-rectifying. List price, $20.00.

Vibrapacks

(TRADE MARK REG. U. S. PAT. OFFICE)

Radio operators, engineers and public address men everywhere have discovered that the most satisfactory and economical answer to dependable plate voltage from a storage battery source is a Mallory Vibrapack. This *perfected* Vibrator type power supply is easy to use . . . efficient and gives long service.

THE COMPLETE VIBRAPACK LINE

Mallory Vibrapacks are available in both self-rectifying and tube-rectifying types. The complete line includes single and dual Vibrapacks for outputs up to 60 watts. Type VP-G556 is designed for operation with the 12 volt batteries commonly used in airplane, bus and boat service. Free engineering service in adapting the Vibrapack to your requirements is available on request.

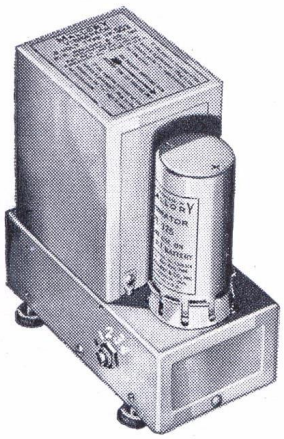

Send for **TECHNICAL DATA**

An 8-page booklet containing complete descriptions of all Mallory Vibrapacks with application suggestions, technical data and instructions, is available upon request.

Ask for Vibrapack Booklet — Form E-555-C.

Catalog Number	Nominal Operating Voltage	Nominal Output Voltage	Maximum Output Current	Type	Price
VP-540	6.3	250	60 ma.	Self-Rectifying	$20.00
VP-551	6.3	125-150-175-200	100 ma.	Self-Rectifying	15.00
VP-552	6.3	225-250-275-300	100 ma.	Self-Rectifying	18.50
VP-553	6.3	125-150-175-200	100 ma.	Tube-Rectifier	16.50
VP-554	6.3	225-250-275-300	100 ma.	Tube-Rectifier	20.00
VP-555*	6.3	300	200 ma.	Tube-Rectifier	37.50
VP-557*	6.3	400	150 ma.	Tube-Rectifier	37.50
VP-G556	12.6	225-250-275-300	100 ma.	Self-Rectifying	20.00
VP-F558	32.	225-250-275-300	100 ma.	Tube-Rectifier	20.00

*Special Dual Packs for high output.

P.R. MALLORY & CO. Inc.

MALLORY Battery Chargers

Convenient charging of automobile, aircraft, boat, bus and stationary 6 and 12 volt batteries is provided by Mallory Battery Chargers. Tapering effect provides rapid charge for low batteries, lower charge for full batteries.

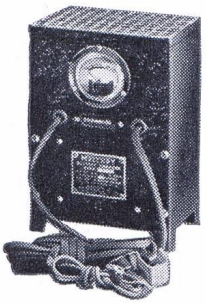

Available in four sizes:

Catalog Number	*Charging Rate*	*List Price*
3C Booster	4-2 amperes	$7.95
5535B Charger	6-4 amperes	$11.50
107 Charger	10-7 amperes	$15.00
*125 Charger	5-3 amperes	$22.50

*(for 12 volt storage batteries)

P.R. MALLORY & CO. Inc.

MALLORY Transmitting Capacitors

It's worth a good bit to be confident of the reliability of your transmitter —to know that when you close the "big switch," your rig is ready to deliver a T9X signal. It's false economy to use "bargain" filter condensers since their failure can result in damage to expensive transmitter components.

Mallory type TZ Transmitting Condensers are compact round-container units for those who must watch their costs. They have all the essentials, and are built with true Mallory quality. Available in sizes to 2000 working volts DC.

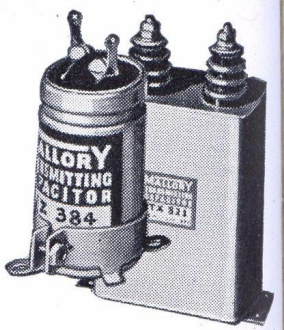

If you prefer square containers, then Mallory TX transmitting condensers will fill your requirements. Available in 21 stock sizes, with working voltages from 600 volts to 6000 volts. Constructed with an exclusive dielectric that gives longer life and greater dependability . . . Mallory Transmitting Capacitors are a real safeguard for expensive rigs.

Use P.R. MALLORY & CO. Inc. MALLORY APPROVED PRECISION PRODUCTS

P. R. MALLORY & CO., Inc.

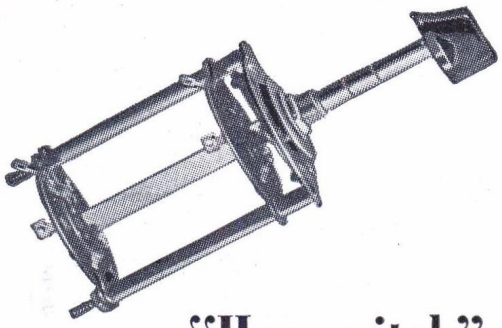

"Hamswitch"

Designed for economy and convenience, this Mallory Hamswitch No. 1511, permits the use of a single meter to measure currents or voltages on up to and including five circuits in an amateur transmitter. An adjustable stop permits easy adaptation for fewer positions.

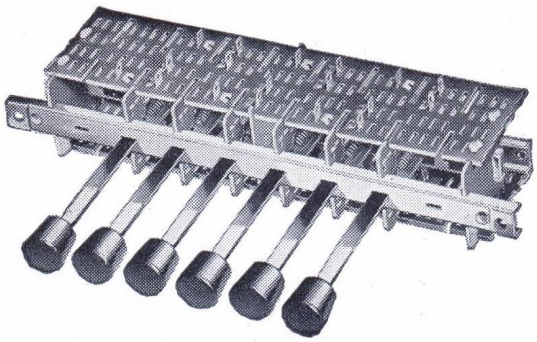

Multiple Push Button

Mallory Type 2190 switches make it possible to measure a number of circuits with a single current reading meter. The insertion of the meter in the circuit is accomplished merely by pushing a button. Other circuits connected to the switch remain closed and uninterrupted.

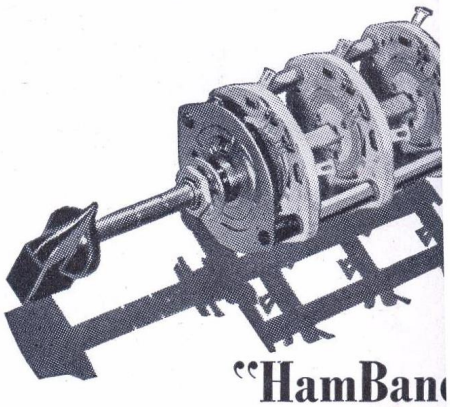

"HamBand

Mallory HamBand Switches m transmitter wave band switching convenient as changing bands your communications receiv Convenient terminal arrangeme wide spacing of current carrying pa heavily silverplated contacts and l loss magnesium silicate ceramic insu tion are features especially desig for high-frequency applications. Y distributor has data sheets.

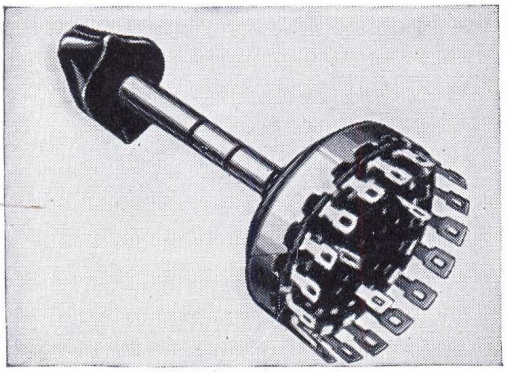

SINGLE GANG CIRCUIT SELECTOR

Mallory Push Button switches are outstanding characteristics of this switch . . . just one of many types available.

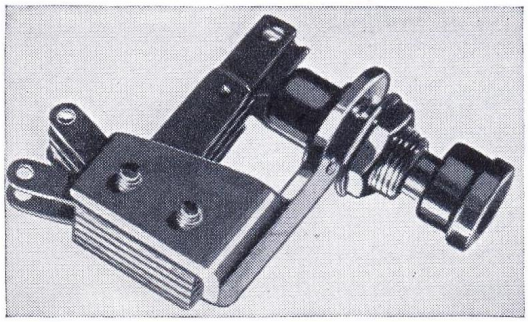

SINGLE PUSH BUTTON

Mallory Push Button switches are ideal for meter shunt service, as well as for set analyzers, tube checkers and other test equipment. Available in both locking and non-locking types with a variety of spring contact arrangements.

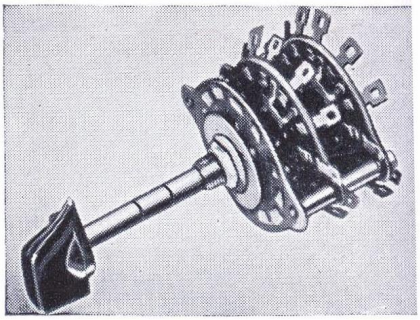

MULTI-GANG CIRCUIT SELECTOR

Here's the ideal answer to simplified control of complicated circuits. Positive action and long life are assured by rigid construction.

FOR THE BEST IN RADIO HARDWARE . . . IT'S MALLORY

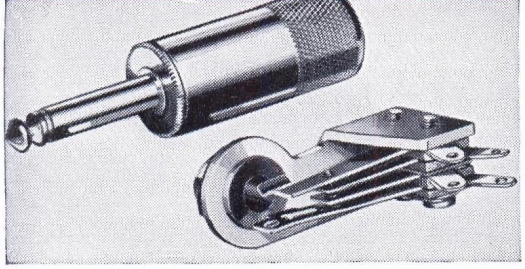

Mallory Two-way phone plug No. 75N, with shielded nickel shell. Other types—three-way, tie cord, etc.—in both bakelite and nickel shells.

Mallory Junior Jack No. 704—springs are parallel to panel for compactness —thirteen combinations available.

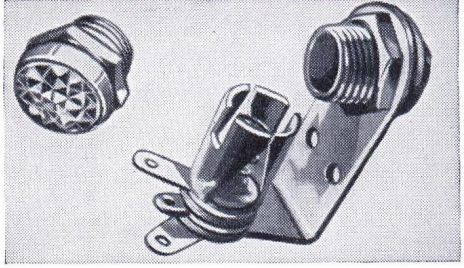

Avoid run down batteries, or increased power bills by using Mallory Pilot Lights and Jewels as indicators. They will keep you "informed" at all times, and enhance the appearance of your rig. These real money savers are available in red, green and white.

P. R. MALLORY & CO. Inc.

MALLORY

Grid Bias Cells

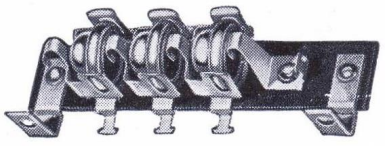

Minimum distortion, less hum and lower cost can be obtained with Mallory Grid Bias Cells. Write for Form B-303 which gives complete engineering data.

SEND FOR COMPLETE CATALOG

INDIANAPOLIS . . . INDIANA

CABLE ADDRESS — PELMALLO

Use P. R. MALLORY & CO. Inc. MALLORY APPROVED PRECISION PRODUCTS

DOES YOUR RADIO INSULATION MEASURE UP TO THESE "PYREX" STANDARDS?

Low power loss . . . low surface conductivity . . . high electrical resistance . . . smooth, hard surface . . . resistance to corrosion . . . high strength-to-weight ratio!

THESE properties are essential to satisfactory radio insulation. But that's not all — they must be permanent and unchanged by age, elements, or energy impact.

Use PYREX brand Radio Insulators and you get all these properties . . . at their best. For example:

- √ LOW LOSS FACTOR: Less than 2.0 at 740,000 cycles.
- √ LOW SURFACE CONDUCTIVITY: Almost negligible . . . 10^{14} ohms resistivity per sq. in. at 34% humidity; 10^{10} ohms at 84% humidity.
- √ HIGH ELECTRICAL RESISTANCE: Volume resistivity 5 x 10^{14} ohms per cubic in. at 22° C., uniform throughout.
- √ SPECIFIC GRAVITY: Only 2.23; hence, light in weight.
- √ NON-POROUS, NON-CORROSIVE: No pores to pit; no added glaze to check or craze; surface and body are homogeneous.
- √ SHOCK-RESISTANT: Low expansion coefficient (.0000032 between 19° C. and 350° C.) makes "Pyrex" Insulators indifferent to heat shock and sudden temperature changes.

T.M. REG. PYREX U.S. PAT. OFF.

Send for free folder or United catalog pages describing complete line of PYREX Radio Insulators. And at your local supply house, ask for PYREX Insulators by name.

"Pyrex" is a registered trade-mark and indicates manufacture by

Corning Glass Works

INSULATION DIVISION • CORNING, N. Y.

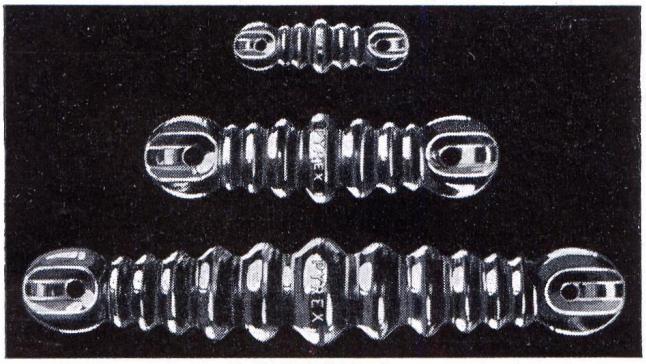

PYREX ANTENNA INSULATORS: Top — 67007, length 3⅝"; center — 67017, 7½"; bottom — 67021, 12¼".

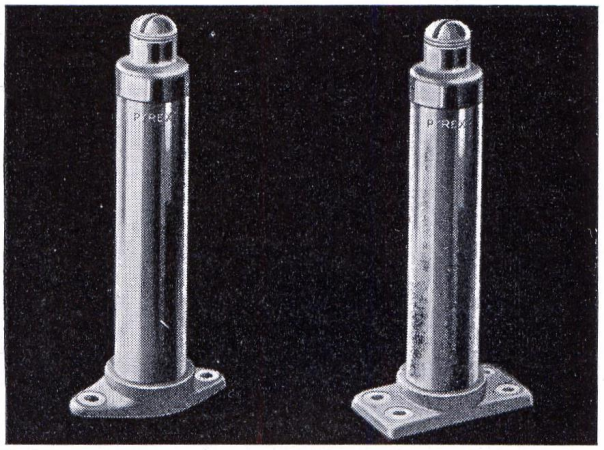

PYREX STANDOFF INSULATORS: Left — Nos. 67106 (3") and 67107 (7"), oval base. Right — Nos. 67108 (3") and 67109 (7"), rectangular base.

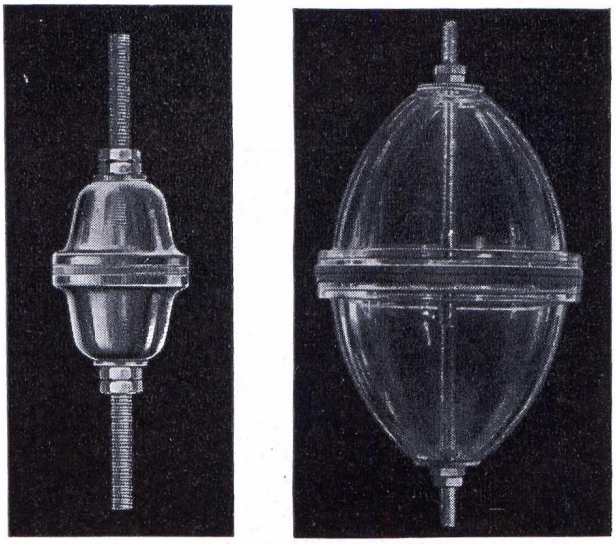

PYREX ENTERING INSULATORS: Left — Amateur Type, Nos. 67104 (15"), 67105 (20"). Right — Amateur Type, Nos. 67115 (6-1/16" x 15"), 67116 (6-1/16" x 20").

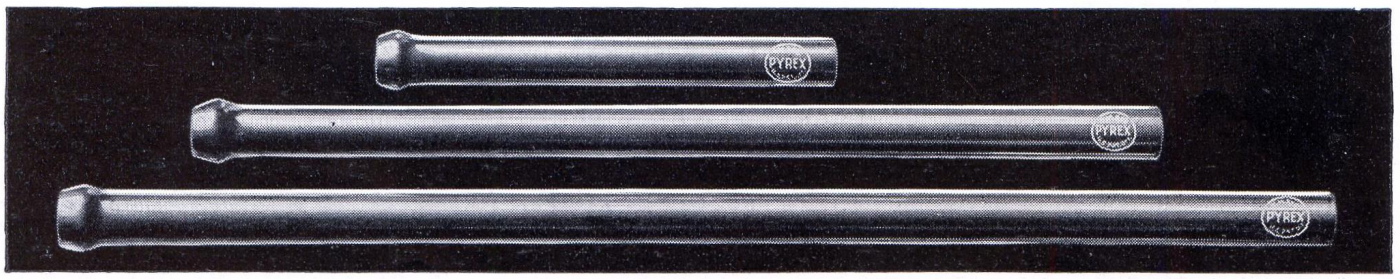

PYREX WALL TUBE INSULATORS: Top — No. 67006, 6" long; center — 67012, 12"; bottom — 67015, 15".

Centralab

The Quality Line

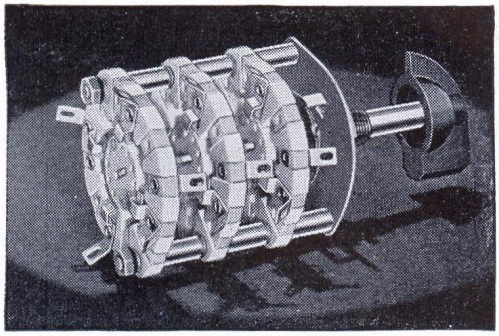

SELECTOR SWITCH

Available in an almost infinite variety of combinations . . . in bakelite or steatite . . . in single or multiple gang . . . from two to eleven positions on any one switch . . . also available for use in amateur transmitters.

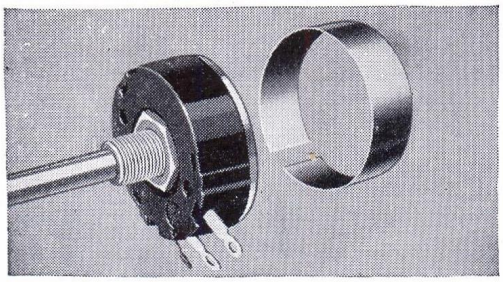

STANDARD RADIOHM

Wall type resistor. Exclusive non-rubbing contact band. 1⅜" diameter x 9/16" deep. Available single, twin or triple, plain or tapped . . . with S.P.S.T., D.P.S.T. or S.P.D.T.

Hams, Servicemen, Experimenters and Manufacturers appreciate the utter dependability of Centralab products. Since 1922 more than a hundred million radio parts bespeak the universal acceptance accorded Centralab products. Send for catalog if your jobber cannot supply you.

CENTRALAB
Div. of Globe-Union Inc.
MILWAUKEE

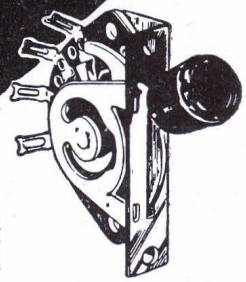

LEVER ACTION SWITCH

Used singly or in groups . . . for broadcasting, receiving, public address, test instruments and industrial uses. Available in any one of ten different combinations including positive and spring return action.

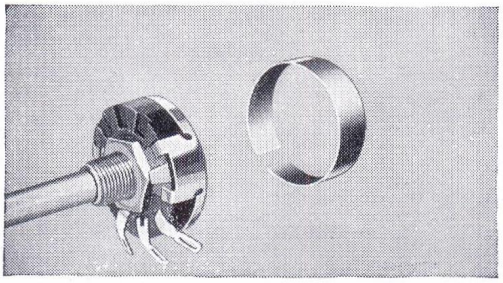

MIDGET RADIOHM

Companion to "standard" . . . small size but large control efficiency. Available single, dual or triple . . . plain or one, two or three taps . . . with S.P.S.T., S.P.D.T., or D.P.S.T. Moulded bakelite case, 1⅛" diameter, ¼" metal shaft 3⅜" long.

WIRE WOUND RADIOHMS

In values from 2 to 10,000 ohms . . . insulated construction . . . 3 watts . . . universal shaft for all replacements . . . regular Radiohm switch covers may be attached . . . in linear curve only . . .

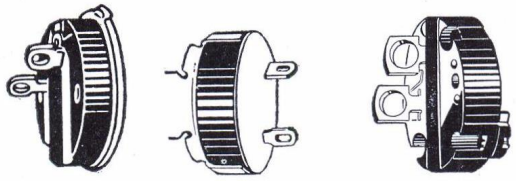

ATTACHABLE SWITCH COVERS

For standard and wirewound resistors (Radiohms) as well as Midget and Elf Radiohms . . . S.P.S.T. . . . S.P.D.T. . . . D.P.S.T . . . four point . . . S.P.D.T. (operates at clockwise position) and S.P.S.T. with Dummy Lug.

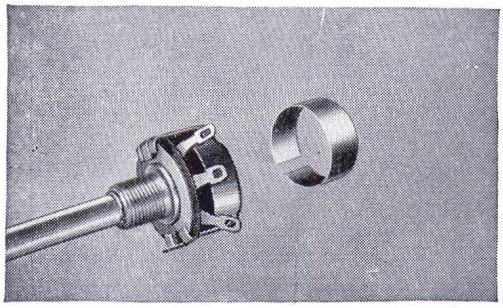

ELF RADIOHM

Smaller but also features the long, straight resistor strip. Available plain or tapped with S.P.S.T. switch . . . with or without dummy lug. Bakelite case 57/64" diameter, 17/32" deep (less switch) 25/32" deep with switch.

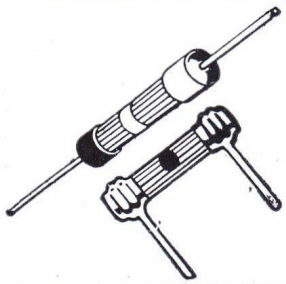

AXIAL LEAD RESISTORS

Body is insulated by inert ceramic jacket . . . proof against vibration and humidity . . . will withstand five times rated load without permanent change. In two sizes . . . RMA coded . . . ½ watt at ⅛" x ⅝" and 1 watt at ¼" x 1" . . . Also supplied in conventional RADIAL LEAD Style . . . ½ watt — 1 watt or 2 watt.



CERAMIC TRIMMER CONDENSER

where greater stability than ordinary types is required. Supplied with neg. temp. coefficient of .006 MMF/MMF/C°. With or without mounting brackets.

CERAMIC CAPACITOR

Small "special purpose" for h.f. circuits where temperature compensation, low power factor, or absolute permanence are important. 1000 V.D.C. leakage resistance more than 10,000 meg. Power factor less than 1%.

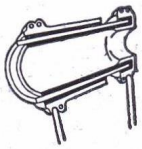

SEND FOR CATALOG NO. 23

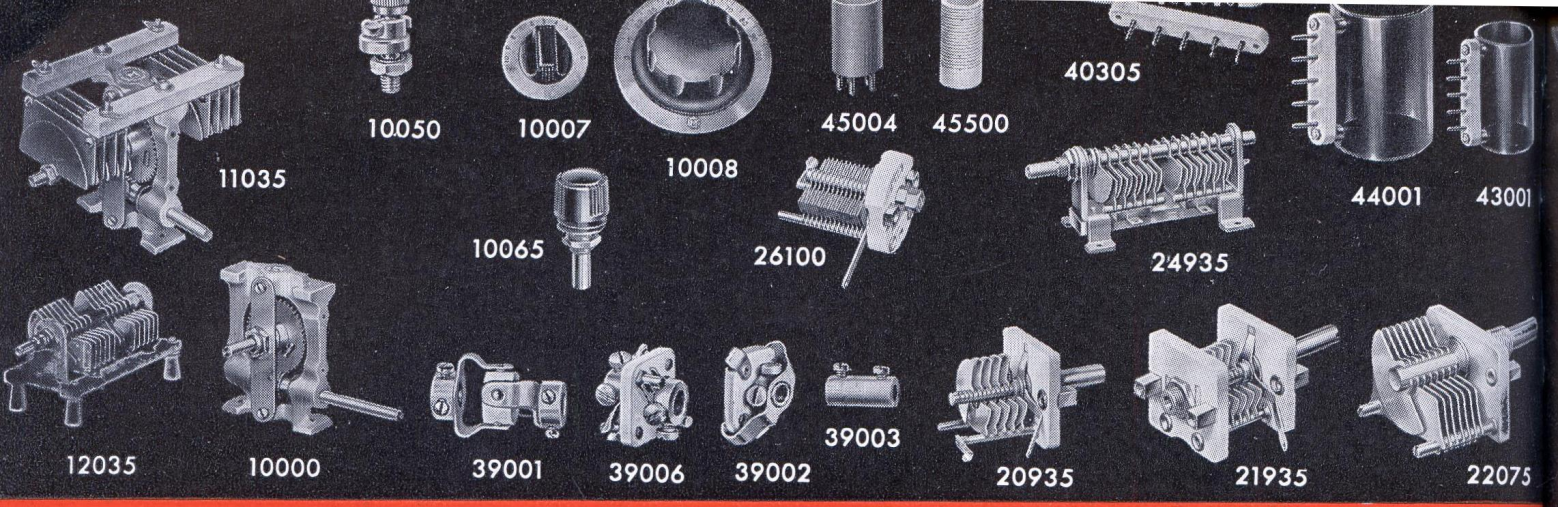

MILLEN MODERN PARTS

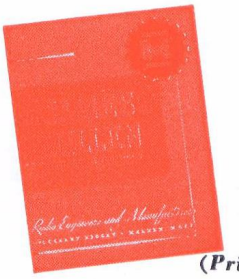

MILLEN RADIO PRODUCTS are well designed MODERN PARTS for MODERN CIRCUITS, attractively packaged, moderately priced, and fully guaranteed. They have been designed with a view toward easy and practical application as well as efficient performance. For instance, the terminals are located so as to provide shortest possible leads, mounting feet are designed for easy insertion of screws and socket contacts, so that the solder won't run down inside them and make impossible the insertion of the tube, etc. Thus our slogan, "Designed for Application." Our general catalog is available for the asking either from your favorite parts supply house or direct from the factory.

(Prices subject to change without notice)

11000, 12000, 13000, 14000 SERIES CONDENSERS
#11,000 series has worm drive

MILLEN TYPE

Code	*Capacity per side*		*Air Gap*	*Voltage Rating*	*Net Price*
	Max.	*Min.*			
11035	36	4.6	.077″	3000	$6.90
11050	51	6.5	.077	3000	7.14
11070	74	9.5	.077	3000	7.80
13035	35	4.9	.077	3000	4.56
13050	49.5	6.3	.077	3000	5.20
13070	71	7.3	.077	3000	5.88
14200	204	10.7	.077	3000	7.80
14100	90.5	12.9	.171	6000	12.00
14050	50		.171	6000	7.20
14060	60		.265	9000	12.00

CONVENTIONAL SINGLE SECTION TYPE

Code	*Capacity per section*		*Air Gap*	*Finish on Plates*	*Net Price*
	Min.	*Max.*			
12935	9	37	.176″	Polished	$4.32
12936	9	37	.176	Plain	3.90
12536	6	43	.077	Plain	2.40
12551	7	55	.077	Plain	2.70
12576	9	76	.077	Plain	3.00
12510	12	101	.077	Plain	3.60
12515	18	151	.077	Plain	4.50

CONVENTIONAL DOUBLE SECTION TYPE

Code	*Capacity per section*		*Air Gap*	*Finish on Plates*	*Net Price*
	Min.	*Max.*			
12035	6	43	.077″	Polished	$4.32
12036	6	43	.077	Plain	3.90
12050	7	55	.077	Polished	5.10
12051	7	55	.077	Plain	4.32
12075	9	76	.077	Polished	5.61
12076	9	76	.077	Plain	5.40

Code	*Description*	*Net Price*
10000	Worm Drive Unit	$3.75
10001	Drum Meter Dial-0-100	1.85
10007	1⅛″ Nickel Silver Inst. Dial-0-100	.50
10008	3½″ Nickel Silver Inst. Dial-0-100	1.00
10050	Dial Lock	.45
10060	Shaft Lock for ¼″ Shafts	.36
10065	Vernier Drive Unit	.36
10067	Shaft Bearing, ¼″	.21
15001	Neutralizing Condenser 0.7–4.3	.90
15002	Neutralizing Condenser 0.5–13.5	1.05
15003	Neutralizing Condenser 1.5–8.5	.90
15005	Neutralizing Condenser 3.4–14.6	2.00
15006	Neutralizing Condenser 2.8–9.1	3.00
20015	Steatite Ultra Midget 15 mmfd SS	.75
20035	Steatite Ultra Midget 35 mmfd SS	1.00
20050	Steatite Ultra Midget 50 mmfd SS	1.20
20100	Steatite Ultra Midget 100 mmfd SS	1.50
20140	Steatite Ultra Midget 140 mmfd SS	1.70
20920	Steatite Ultra Midget 20 mmfd DS	1.20
20935	Steatite Ultra Midget 35 mmfd DS	1.40
21050	Steatite Ultra Midget 50 mmfd SS	1.75
21100	Steatite Ultra Midget 100 mmfd SS	1.90
21140	Steatite Ultra Midget 140 mmfd SS	2.10
21935	Steatite Ultra Midget 35 mmfd DS	1.90
22075	Steatite Midget 75 mmfd SS	1.32
22100	Steatite Midget 100 mmfd SS	1.38
22140	Steatite Midget 140 mmfd SS	1.62
22915	Steatite Midget 15 mmfd DS	1.20
22935	Steatite Midget 35 mmfd DS	1.30
22950	Steatite Midget 50 mmfd DS	1.50
23075	Steatite Dual Midget 75 mmfd per section SS	2.60
23100	Steatite Dual Midget 100 mmfd per section SS	2.50
23925	Steatite Dual Midget 25 mmfd per section DS	2.25
23950	Steatite Dual Midget 50 mmfd per section DS	2.50
24100	100 mmfd per section. Single spaced	2.75
24935	35 mmfd per section. Double spaced	2.75
25130	93–130 Air Padder	1.50
26025	3.2–25 Air Padder	.96
26050	4–50 Air Padder	1.08
26075	4.3–76 Air Padder	1.20
26100	5–97 Air Padder	1.32
26140	6.5–140 Air Padder	1.60
26920	4.5–20 Air Padder	1.40
26935	5.5–36 Air Padder	1.50
27010	10 mmf Silver on Mica	.36
27025	25 mmf Silver on Mica	.36
27050	50 mmf Silver on Mica	.36
27100	100 mmf Silver on Mica	.36

JAMES MILLEN MFG. CO., INC.

MAIN OFFICE AND FACTORY

MALDEN, MASSACHUSETTS, U.S.A.

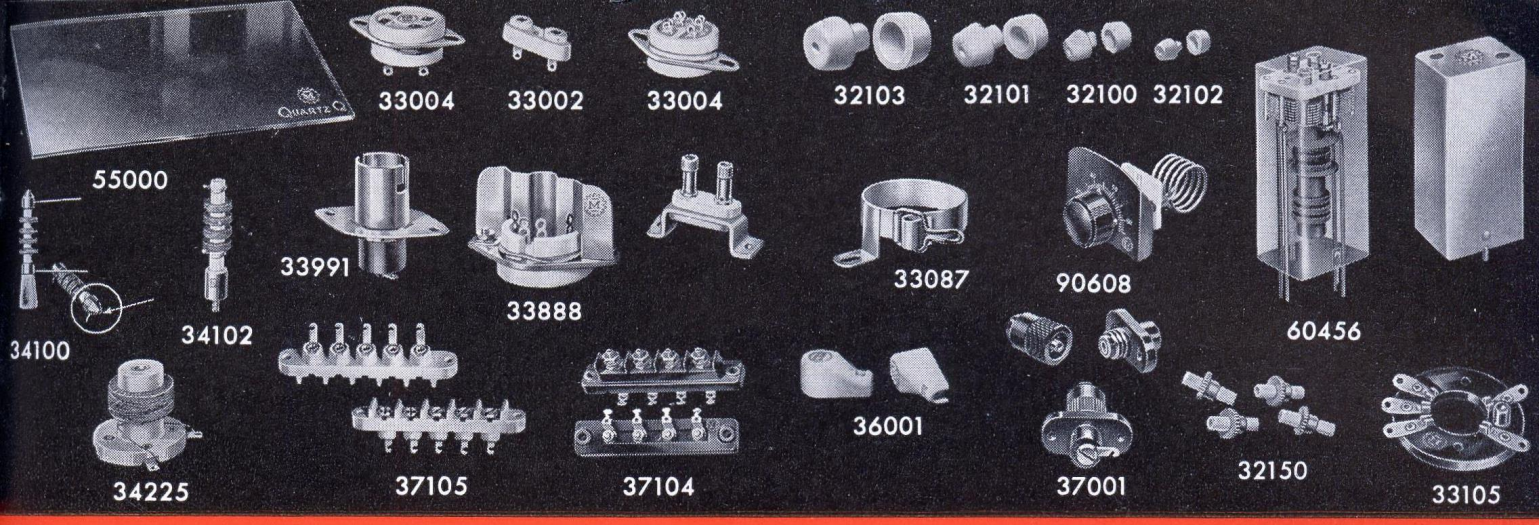

DESIGNED for APPLICATION

Code	Description	Net Price
27150	150 mmf Silver on Mica	$ .42
28030	30 mmfd Mica Padder	.15
30001	Standoff, ½ x 1⅜, QuartzQ	.15
30002	Standoff, ½ x 2⅛, QuartzQ	.21
30003	Standoff, ¾ x 2⅛, QuartzQ	.55
30004	Standoff, ¾ x 4⅛, QuartzQ	.65
31001	Standoff, ½ x 1, Isolantite	.20
31002	Standoff, ½ x 2½, Isolantite	.27
31003	Standoff, ¾ x 2, Isolantite	.30
31004	Standoff, ¾ x 3½, Isolantite	.42
31011	Cone, ¾ x ½, Steatite	.07
31012	Cone, 1 x 1, Steatite	.21
31013	Cone, 1½ x 1, Steatite	.27
31014	Cone, 2 x 1, Steatite	.75
31015	Cone, 3 x 1½, Steatite	.45
32100	Steatite Bushing for ⅜" hole	.30
32101	Steatite Bushing for ½" hole	.35
32102	Steatite Bushing for ¼" hole	.20
32103	Steatite Bushing for ¾" hole	.45
32150	Isolantite Thru-bushing, for ¼" hole	.05
32201	Steatite Bushing and Hardware	.75
32203	Steatite Bushing and Hardware	3.60
32300	Isolantite Bushing	1.80
33002	Crystal Socket	.25
33004	4 Prong Socket	.24
33005	5 Prong Socket	.24
33006	6 Prong Socket	.24
33007	7 Prong, Large, Socket	.34
33008	8 Prong, Octal, Socket	.24
33087	Base Clamp for 807 etc.	.30
33105	Acorn Socket, QuartzQ	.90
33888	Aluminum Shield for 33008	.18
33991	Socket for 991 etc.	.45
34010	Shielded 10 MH receiving	.60
34100	Universal 2.5 MH	.36
34101	Universal 2.5 MH, less Standoff	.30
34102	Commercial type 2.5 MH	.36
34140	Universal air core Transmitting	1.00
34150	Amateur Band Iron Core	1.75
34210	General Purpose RFC 10 MH	.60
34225	General Purpose RFC 25 MH	.75
34240	General Purpose RFC 40 MH	.75
34285	General Purpose RFC 85 MH	.95
34800	Interruption Frequency Oscillator Coil	1.20
36001	Ceramic Plate Cap, 9/16" for 866 etc.	.21
36002	Ceramic Plate Cap, ⅜" for 807 etc.	.21
37001	Black Bakelite Safety Terminal	.40
37104	Four Terminal, Black Bakelite	.60
37105	Five Terminal, Steatite	.50
37202	Steatite Plates, Pr.	.21
37211	Bracket	.15
37222	Terminal Posts, Pr.	.30
37501	Low Loss Mica Bakelite Safety Terminal	.45
38001	Isolantite 3/16" O.D. Beads (Pk of 50)	.30
38500	100 Beads, 5/16" dia., QuartzQ	.60
39001	Truly Flexible Isolantite Coupling	.36
39002	Conventional Coupling	.36
39003	Solid Brass N.P. Coupling	.21
39005	Universal Joint, Non-Insulated Coupling	.36
39006	Slide Action Coupling	.36
40205	Midget Coil Plug	.24
40305	Intermediate size coil plug	.45
41205	Midget Coil Socket	.30
41305	Intermediate size coil socket	.45
43001	QuartzQ blank coil form and plug	.90
43011	Midget coils for each band. Mounted on No. 40205	.90
43021		.90
43041		.90

Code	Description	Net Price
43081	plug. No. 1 at end of code means center link. No. 2, end link.	$ .90
43161		.90
44000	QuartzQ coil form 1¾" dia. x 3¾"	.75
44001	QuartzQ blank coil form and plug	1.20
44005	"100 watt" coils for each band. Mounted on No. 40305 plug.	1.50
44010		1.50
44020		1.50
44040		1.50
44080		1.90
44160		2.10
44500	Swinging link and socket	1.75
45000	Coil Form, 1" dia. no p., low loss mica base Phenolic	.21
45004	Coil Form, 1" dia. 4 p., low loss mica base Phenolic	.30
45005	Coil Form, 1" dia. 5 p., low loss mica base Phenolic	.30
45500	Coil Form, ⅝" dia., Steatite	.45
46100	Coil Form, 1½" dia. no p., QuartzQ	.45
47001	Coil Form, ½" dia., QuartzQ	.10
47002	Coil Form, ½" dia., QuartzQ	.15
47003	Coil Form, ¾" dia., QuartzQ	.35
47004	Coil Form, ¾" dia., QuartzQ	.45
55001	Sheet, 3 x 8½ x .1, QuartzQ	.45
58000	Coil Dope. 2 oz., QuartzQ	.30
77083	"83" Hash Filter 250MA	1.00
77866	"866" Hash Filter 500MA	1.25 pr.
77872	"872" Hash Filter	1.40 pr.
79020	14mc Band Wave Trap	.90
79040	7mc Band Wave Trap	.90
79080	3.5mc Band Wave Trap	.90
79160	1.7mc Band Wave Trap	.90
	Air Trimmed I. F. Trans	
60454	456 Diode Air Core	4.50
60455	456 Interstage (1) Air Core	4.50
60456	456 Interstage (2) Air Core	4.50
60501	5000 Interstage (2) Air Core	4.50
60502	5000 Diode Air Core	4.50
60503	5000 FM Interstage Air Core	4.50
60504	5000 FM Disc Air Core	4.50
62161	1600 Interstage Iron Core	4.50
62162	1600 Diode Iron Core	4.50
62454	456 Diode Iron Core	4.50
62456	456 Interstage Iron Core	4.50
63163	1600 BFO Air Core	4.50
63456	456 BFO Air Core	4.50
63503	5000 BFO Air Core	4.50
	Mica Trimmed I. F. Trans.	
67454	456 Diode Iron Core	1.25
67456	456 Interstage Iron Core	1.25
67503	5000 FM Interstage Air Core	1.50
67504	5000 FM Disc Air Core	1.50
	Permeability Tuned I. F. Trans.	
64454	456 Diode (2)	1.35
64456	456 Interstage (2)	1.35
65456	456 BFO	1.35
	Triple Tuned I. F. Trans.	
66454	456 Diode	1.75
66456	456 Interstage	1.75
90600	Complete set of four Wavemeters, in case	10.00
90605	Range 2.8 to 9.7 mc. Wavemeter	2.65
90606	Range 9.0 to 28 mc. Wavemeter	2.65
90607	Range 26 to 65 mc. Wavemeter	2.65
90608	Range 50 to 140 Wavemeter	2.65
90721	Hetrofil	4.00

JAMES MILLEN MFG. CO., INC.

MAIN OFFICE AND FACTORY

MALDEN, MASSACHUSETTS, U.S.A.

PAR METAL

Quality

RACKS
PANELS
CHASSIS
CABINETS



FOR

Amplifiers, P. A. Systems, Transmitters, Transceivers
Receivers, Test Equipment, Special Jobs.

NEW CATALOG No. 41 SENT ON REQUEST

PAR-METAL PRODUCTS CORPORATION

3262 — 49th STREET LONG ISLAND CITY

Export Dept: 100 Varick St., New York, N. Y.



WALTER H. CANDLER
Originator of the famous CANDLER SYSTEM and founder of the Candler System Company.

LEARN or SPEED UP YOUR CODE at Home

With the NEW CANDLER SYSTEM

TRAINS YOU TO MEET NEW CODE SPEED REQUIREMENTS

★

Obtain Your Amateur or Commercial License in ½ Usual Time With The New CANDLER SYSTEM Training

You Can Learn Code RIGHT, from the beginning *as you will be using it on the air*, or obtain your commercial license and qualify for a good job by taking CANDLER TRAINING in your own home, as McElroy, Jean Hudson, McDonald and many others have done and are doing. It is surprisingly easy and inexpensive.



T. R. McELROY
Official Champion Radio Operator, Speed 75.2 wpm., won at Asheville Code Tournament July 2, 1939, says: "My skill and speed are the result of the exclusive, scientific training Walter Candler gave me. Practice is necessary, but without proper training to develop *Concentration, Co-ordination* and a keen *Perceptive Sense*, practice is of little value. One likely will practice the wrong way."

It takes more than merely the sending and receiving of code to become a skilled radiotelegraph operator. The New CANDLER SYSTEM teaches you quickly the technique of Fast, Accurate telegraphing.

LEARN AT HOME
To Read Code at High Speeds Like You Read Print

If you've practiced and practiced with any kind of practice set, but can't get over the "hump" that seems to be your limit — don't be discouraged. Thousands of skilled operators have had the same experience. Some thought they were dumb; others thought they weren't "gifted." But you should see those fellows today! They can send beautiful code and copy fast press 4 to 8 words behind without conscious effort or strain. Those fellows have *Automatic Sound Consciousness* — and they got it through CANDLER Training!



JEAN HUDSON, W3BAK
At the age of 9, after taking Candler code training, Jean won the championship in Class E, at Chicago World's Fair.

No Expensive Practice Sets Needed for Candler Training

Learning to Send and Receive Code Rapidly, skilfully is a Mental Process that requires Mind Training such as only CANDLER can give you. Practice of any kind without this Specialized Training is like trying to learn electricity without a knowledge of *Ohm's Law*. CANDLER shows you the easy, interesting way to Speed, Skill, and that Amateur or Commercial License in half the usual time.

CANDLER SYSTEM

Box 928, Dept. HA-42

DENVER, COLORADO



L. R. McDONALD, W8GW
At the Asheville Tournament copied 75 wpm. McDonald says: "Without Candler scientific training and specialized practice, I could never have made my record of 75 wpm. Candler fundamental training is necessary to speed and skill."

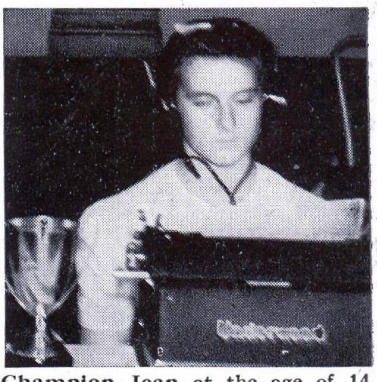

Champion Jean at the age of 14 when she won the championship in Class B at the Asheville Code Tournament.

SEND FOR THIS FREE

BOOK OF FACTS

It gives you the story of the champions and many inside tips that will help you. It is FREE, a postal will bring it to you. No obligation.

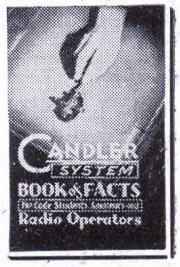

EXCLUSIVE SPRAGUE FEATURES

SPELL LONGER LIFE . . . GREATER DEPENDABILITY

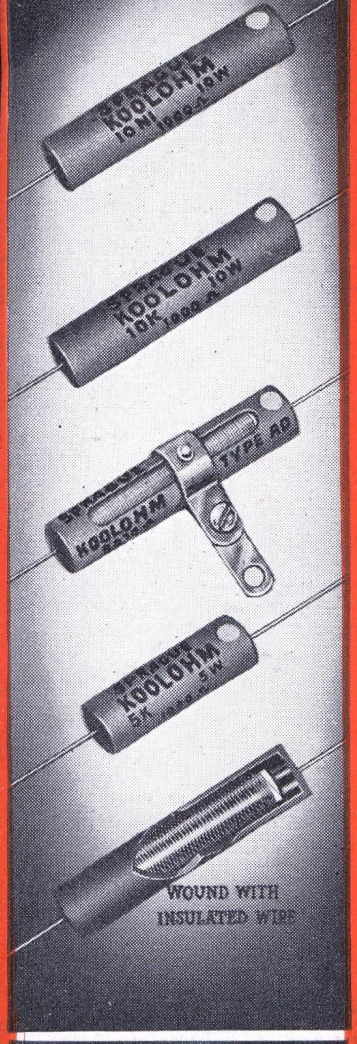

KOOLOHM RESISTORS

Built for Use at Full Wattage Ratings—Sprague Koolohm Resistors were designed by men who "didn't know it couldn't be done"—so they did it. Koolohms are made with wire that is insulated before it is wound with an exclusive 1000° C. heat-proof, moisture-proof material. This permits layer-wound construction; higher resistance in less space; faster heat dissipation; outstanding stability; extreme accuracy; greater protection, and facilitates production of non-inductive types that are truly non-inductive.



SPRAGUE TRANSMITTING CONDENSERS

Quadruply Protected—Sprague Transmitting Condensers are not wax-filled. They're both oil-filled and oil-impregnated the way high voltage units should be for real protection. Used exclusively is Spracol, the famous 500° flash protection oil—and that isn't all. Terminals are completely insulated from cans, and cans are automatically grounded through the mounting clamps. Moreover, you get a set of Lifeguard Safety Caps for use on terminals with every Sprague Transmitting Condenser. Play safe—use Sprague!

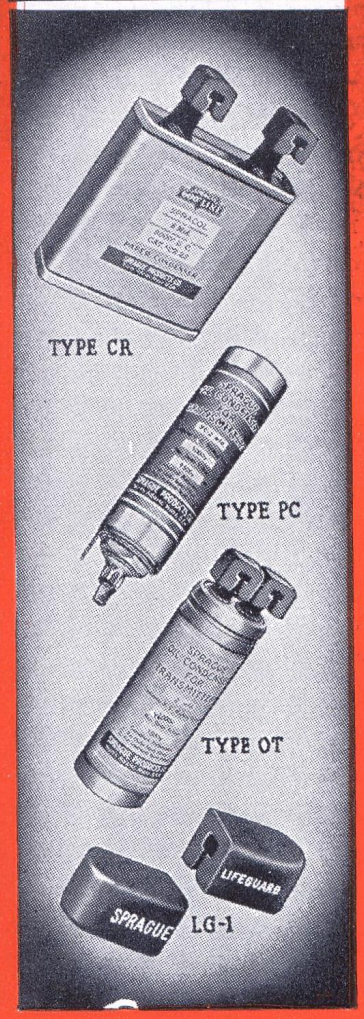

SPRAGUE TC TUBULARS

"Not a Failure in a Million"—The best-known by-pass condensers in radio today—and they have been for many years past. They cost little—they do the job—they will not let you down.

SPRAGUE MICA CONDENSERS

You're Sure the Voltage is Right!—Each voltage has a different colored label for quick, positive identification. Moreover, Sprague Micas are molded in moisture-proof, low-loss bakelite and the extremely high voltage units are sealed in non-hygroscopic porcelain to insure greater stability, longer life. All shapes—all sizes—all voltages.

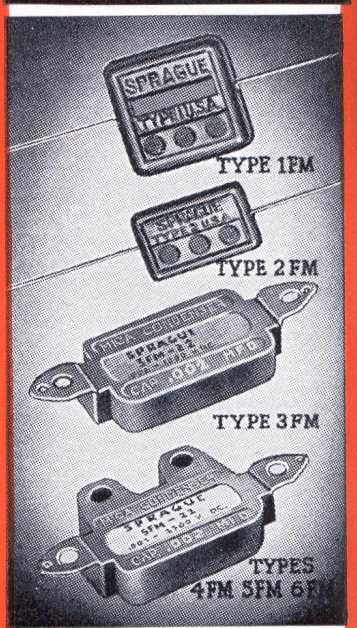

Complete Sprague Catalog Free on Request

UNCASED PAPER SECTIONS *SAVE YOU MONEY*

Sprague Type UC cardboard style "uncased" paper sections cost a whale of a lot less than standard high voltage condensers—and you'll find they'll do a first-class job on practically any rig up to 1,000 volts. Unexcelled for use wherever the call is for real economy and honest, fully-proved quality.

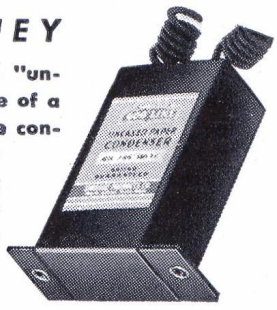

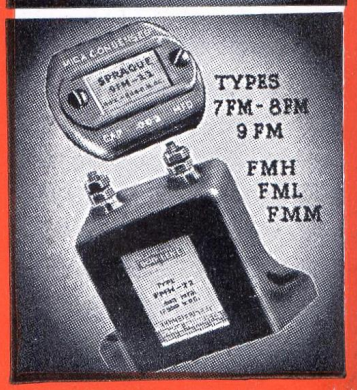

SPRAGUE PRODUCTS COMPANY

NORTH ADAMS, MASS.

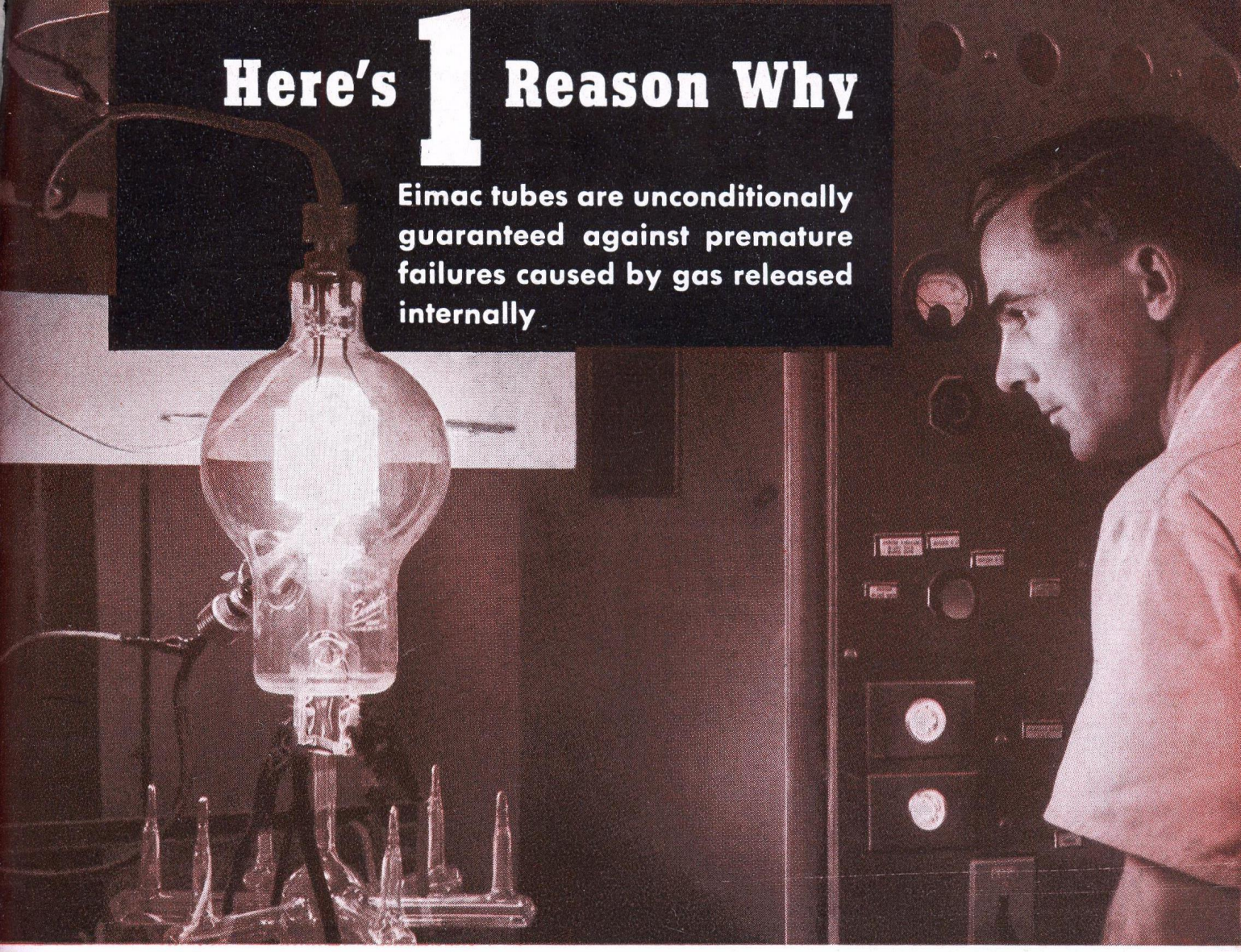

Here's 1 Reason Why

Eimac tubes are unconditionally guaranteed against premature failures caused by gas released internally

Plate dissipation is run up to ten times normal during the exclusive pumping process

Tube elements are fabricated from Tantalum which has the lowest original gas content of any known metal. This relatively small original gas content is then completely removed by the patented Eimac pumping process which you see illustrated in part above. During this process the plate dissipation is run up to ten times the normal ratings of the tube . . . and held there for hours . . . infinitely hotter than they will ever become in operation even under extreme circumstances. All Eimac tubes undergo this severe gruelling and they must pass 100% before they come to you.

Long filament life, uniformity of characteristics, outstanding performance and complete freedom from failures caused by gas released internally are basic reasons why you should adopt Eimac tubes for your transmitter. These are the same reasons why most all the world's leading engineers choose Eimac . . . and why practically every major airline and many of the most vital commercial and government transmitters throughout the world have Eimac tubes in the key sockets.

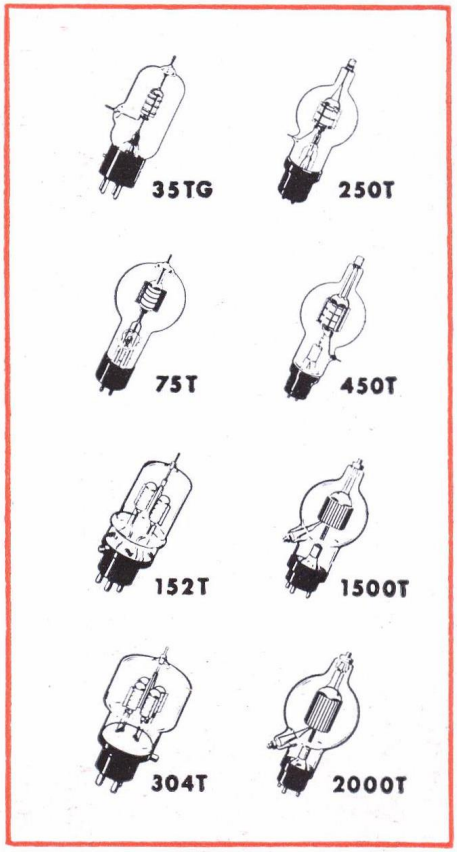

More than 20 tube types. Get information NOW. Data sheets will be sent on request.

Follow the leaders to **Eimac TUBES**

EITEL-McCULLOUGH, INC. San Bruno, California

Birnbach for Ceramics-Cables-Antennas-Plugs-Jacks

CABLES



Twisted pair genuine E01 cable, weatherproof braid with mica finish. 2 No. 12 conductors, 1 KW capacity. 72 ohms surge impedance.

Twisted pair No. 12 solid conductors and weatherproof braid overall. 100 ohms impedance. Excellent for U.H.F. work.

Twisted pair No. 16 stranded conductors, all-rubber weatherproof. 72 ohms impedance. For F.M., Telly and Transmission Lines.

Rubber jacketed crystal mike cable having low losses. Available 3 sizes; .270 dia. and lapel types .175; .155 dia.

Shielded rubber mike cables. Available in 2 to 7 conductors. Unshielded from 2 to 8 conductors. All have tough rubber jacket overall.

Battery cables in 2 available types; cotton braid, overall 2 to 12 conductors, tin shielded overall, 2 to 10 conductors.

Diathermy cables extremely flexible with special tough live rubber jacket. Good for all electrotherapy apparatus.

AND MANY OTHERS

TRANSMITTING SOCKETS

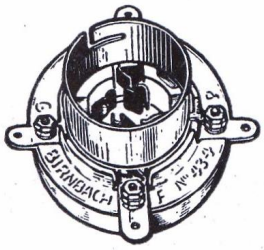

50 watts, extra-heavy side-wiping phosphor-bronze spring contacts. Glazed porcelain base, solid brass NP shell. 10 watt type also available.

CERAMIC FEEDTHRU INSULATORS



LEADIN FEEDTHRU

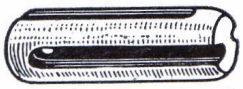

AIRPLANE TYPE



FEEDTHRU



CORRUGATED

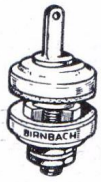

STEATITE BUTTON

A large selection of feedthru insulators for all types of applications. Glazed low-absorption Porcelain, Steatite and Lucite provide a choice of insulation for standard and specialized uses. Insulators vary in height from 5/8" to 4 1/2" and come in plain or jack tops. All are complete with solid brass hardware, nickel plated.

CERAMIC STANDOFF INSULATORS



CONE

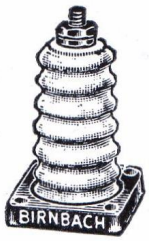

METAL BASE



STEATITE PILLAR



STANDOFF

A complete line of standoff insulators available in highly-vitrified, low absorption, glazed Porcelain and Steatite. A standoff insulator for every standard and many specialized applications. Available in sizes from 5/8" to 4 1/2" high and with plain or jack tops. All are complete with solid brass hardware, nickel plated.

BANANA PLUGS AND JACKS

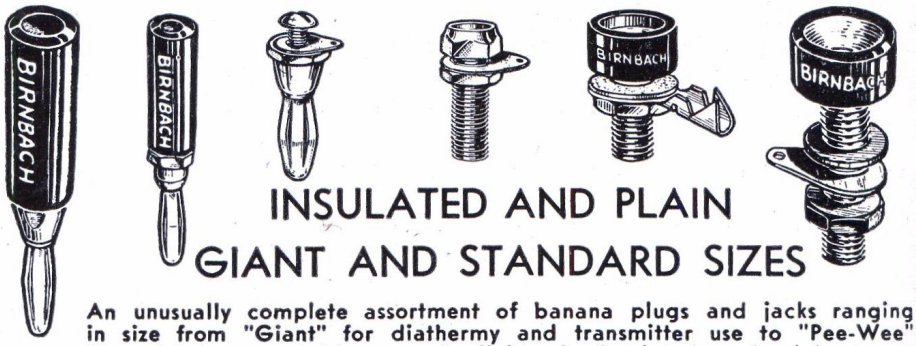

INSULATED AND PLAIN

GIANT AND STANDARD SIZES

An unusually complete assortment of banana plugs and jacks ranging in size from "Giant" for diathermy and transmitter use to "Pee-Wee" for miniature portable use. Available in insulated and plain types, with soldered or solderless lead connections and with needle or round points. Complete with all solid brass hardware, nickel plated.

2.5 AND 5-METER PORTABLE DOUBLETS

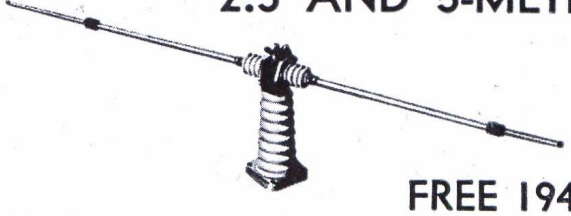

TELEVISION AND F. M. MODELS

Completely adjustable for vertical or horizontal polarization. 360° rotation. Matched E01 cable. Mounting insulator 4 1/2" high. Adjustable arms have special tapered lock bushings. Impedance at center is 72 ohms.

FREE 1942 CATALOG — SEE YOUR DEALER

BIRNBACH RADIO CO., Inc.

145 HUDSON STREET, NEW YORK, U.S.A.

HOWARD

Great Dollar for Dollar Communication Receiver Values.

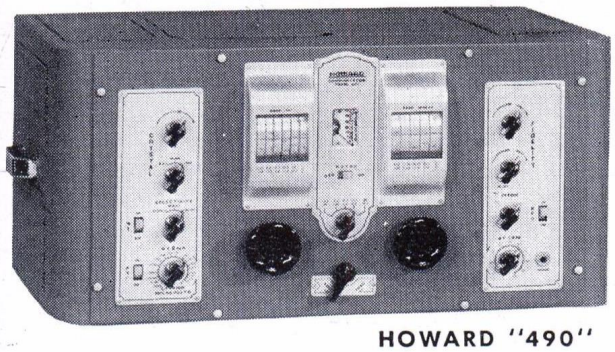

HOWARD "490"

The "490" 14 TUBES—5 BAND Professional RECEIVER

The finest professional type communication receiver built by Howard. Heavy duty construction throughout. Has two tuned R. F. stages, calibrated band spread, air-tuned I. F. transformers, variable I. F. selectivity, temperature compensated oscillator, split stator tuning condensers, variable audio fidelity, automatic noise limiter and 8 watts of push-pull audio. Provides super sharp tuning or broad fidelity for superb reception of music. The Howard "490" is the result of years of engineering and development — the specifications tell their own performance story. Model "490" — complete with crystal filter and tubes, less speaker..... **$164.50**

10" P. M. Howard-Jensen Speaker in separate matching cabinet.....**$12.50**

ANNOUNCING THE NEW "445" — AC-DC RECEIVER — $36.75

The efficiency of this completely new AC-DC receiver is truly remarkable and its performance is fully equal to that of any standard AC set of equal calibre. Six of the latest type tubes, with four of them doing dual purpose duty, provide complete circuit balance and exceptional stability. Model "445" is identical in looks and operating characteristics to the famous Howard Model "435-A", including the tuned R. F. stage and band spread on all 4 bands tuning from 43 MC to 550 KC continuously. An outstanding engineering triumph and value. Comes complete with tubes and built-in 6½" Howard-Jensen Electrodynamic Speaker.

PROVIDES THE SAME FLAWLESS PERFORMANCE AS AN AC SET

(Export and Pacific Coast Prices Slightly Higher)



MODEL "435-A"

MODEL "435-A"—7 TUBES. Designed for amateur communications and for short wave reception from all over the world. Incorporates every desirable basic feature. Tuned R.F. stage on all four bands, with 3 gang condenser, provides improved selectivity, better signal to noise and image ratios and increased sensitivity. Has electrical band spread, BFO with pitch control, AVC, iron core I.F. transformers, A.F. gain control, headphone jack and 6½" Howard-Jensen Speaker. Has connection for battery operated Model 610 Power-Pack. Can be converted to a higher performance receiver with the Progressive Series Plan. Cabinet finished in gray wrinkle enamel. Price complete with tubes and built-in speaker..... **$36.75**

With Carrier Level Meter ..... **$15.75 extra**

MODEL "436-A"—8 TUBES. All features of Model "435-A" above are included in this sensitive 8 tube communication receiver, PLUS an efficient automatic noise limiter and the famous Howard Inertia Tuning Controls. The noise limiter provides a wider range of noise-free reception. Howard Inertia Knobs achieve fast "fly-wheel" tuning when "looking over the band" or slow, smooth adjustment for weak signals. May be converted at any time to Model "437-A"—9 tube receiver. Price complete with tubes and built-in Howard-Jensen Speaker..... **$41.75**



MODEL "437-A"

MODEL "437-A"—9 TUBES. Incorporates all of the features of Models "435-A" and "436-A", PLUS an additional stage of I.F. and Crystal Phasing Control to eliminate unwanted signals when crystal is installed. The most modern of engineering improvements provide an exceptionally high degree of sensitivity, selectivity and stability. In addition to the controls used on Models "435-A" and "436-A", the "437-A" has the Crystal Phasing Control, Crystal In-Out Switch and R.F. Gain Control. Copper plated welded steel cabinet, tuning range (540 KC to 43 MC) and basic construction is identical to Models "435-A" and "436-A". Model "437-A"—Complete with tubes and built-in 6½" Howard-Jensen Electrodynamic Speaker.... **$61.95**

With Crystal Filter installed.....**$69.75**

With Carrier Level Meter as shown.....**$15.75 extra**

See Them at Your Distributors!

HOWARD RADIO COMPANY 1731-35 Belmont Ave., Chicago, Ill.
Cable Address: HOWARDCO, U.S.A.

Engineered and Built by America's Oldest Radio Manufacturer

Take a load off your mind!

PYRANOL CAPACITORS

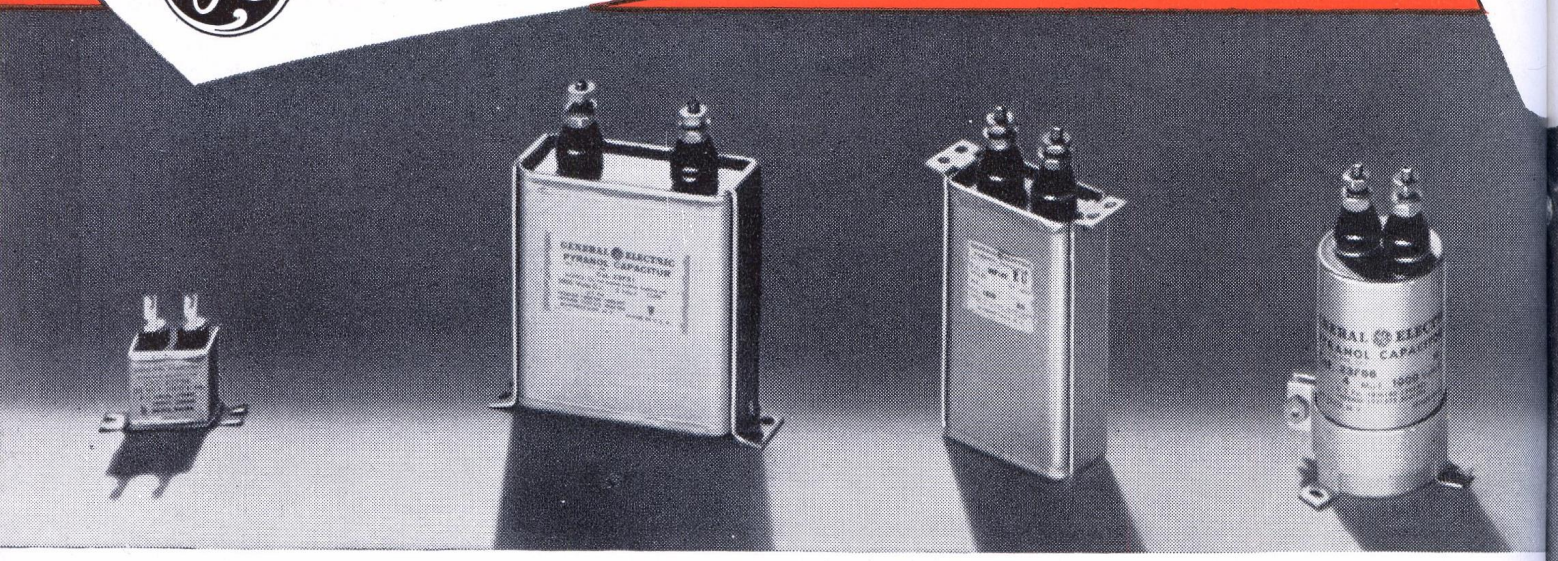

Hams, if space in your rig is at a premium, switch to compact G-E Pyranol capacitors. Pyranol,* in case you haven't heard, is a noninflammable dielectric developed and patented by G.E. It has extraordinary insulating and dielectric qualities that result in small size and long life.

They are being used all over the world, on the land, on the sea, and in the air. You can overload them as much as 10%. In short, they're FB for your rig. Write for Bulletin GEA-2021B.

RATINGS AND PRICES

SMALL SIZE UNITS

Volts D-C	Mfd	Catalog No.	Net Price
500	1.0	23F54	$1.95
1000	0.01	23F55	1.30
1000	0.05	23F56	1.46
1000	0.1	23F57	1.62
1000	0.25	23F58	1.78
1000	0.5	23F59	1.95

RECTANGULAR CASES

Volts D-C	Mfd	Base Mounting Cat. No.	Base Mounting Net Price	Inverted Mounting Cat. No.	Inverted Mounting Net Price
600	1	23F1	$2.27	26F172	$2.27
	2	23F2	2.76	26F167	2.76
	4	23F4	3.57	26F106	3.57
1000	1	23F10	2.43	26F156	2.43
	2	23F11	3.25	26F157	3.25
	4	23F13	4.06	26F93	4.06
	5	23F14	4.87	26F176	4.87
1500	1	23F20	2.92	26F181	2.92
	2	23F21	4.06	26F182	4.06
	4	23F23	5.52	26F184	5.52
	5	23F24	5.85	26F185	5.85
2000	1	23F30	3.57	26F190	3.57
	2	23F31	4.22	26F191	4.22
	4	23F33	5.85	26F193	5.85
	5	23F34	6.50	26F194	6.50
2500	1	23F39	5.20	26F199	5.20
	2	23F40	8.45	26F200	8.45
	4	23F41	11.70	26F201	11.70
3000	1	23F42	7.80	26F202	7.80
	2	23F43	9.75	26F203	9.75
	4	23F44	14.30	26F204	14.30
4000	0.5	23F45	11.70	26F205	11.70
	1	23F46	14.30	26F206	14.30
	2	23F47	18.20	26F207	18.20
5000	0.5	23F48	13.00	26F208	13.00
	1	23F49	16.25	26F209	16.25
	2	23F50	20.80	26F210	20.80

CYLINDRICAL CASES

Volts D-C	Mfd	Catalog No.	Net Price
600	2	23F60	$2.11
	3	23F61	2.43
	4	23F62	2.92
1000	1	23F63	1.78
	2	23F64	2.43
	3	23F65	2.76
	4	23F66	3.08
1500	0.5	23F67	1.95
	1.0	23F68	2.27
	2.0	23F69	3.08
2000	1.0	23F70	2.92
	2.0	23F71	3.25

*Reg. U.S. Pat. Off.

HERMETICALLY SEALED **UPRIGHT OR INVERTED MOUNTING**

COST LESS BECAUSE THEY LAST LONGER

Put a wallop in your rig!

TRANSMITTING TUBES

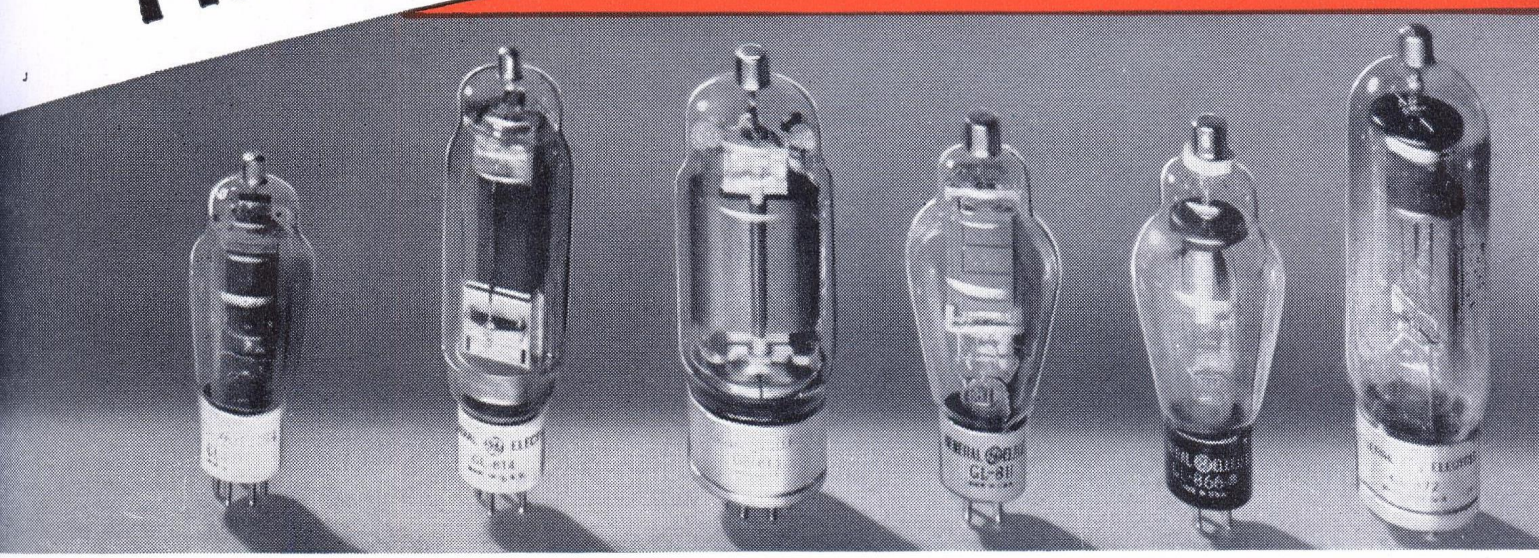

Plenty of sock with plenty of saving—that's what G-E tubes offer the amateur. Whether you are a low-power man who wants to step up a notch or a high-power man who wants greater flexibility in your rig, there are G-E tubes to do the trick. Ask your dealer for your copy of Bulletin GEA-3315, or write direct to General Electric Company, Radio and Television Department, Schenectady, New York.

	G-E BEAM POWER TUBES			G-E TRIODES for Economical Medium Power	
	GL-807	GL-813	GL-814	GL-811	GL-812
Filament Volts	6.3	10	10	6.3	6.3
Filament Amperes	0.9	5	3.25	4	4
Max. Plate Volts*	750	2000†	1500	1500	1500
Max. Plate Milliamps*	100	180†	150	150	150
Driving Power, Watts*	0.22	0.5†	1.5	8	6.5
Input, Watts*	75	360†	225	225	225
Output Power, Watts*	50	260†	160	170	170
PRICE	$3.50	$22.00	$17.50	$3.50	$3.50

	G-E MERCURY-VAPOR RECTIFIERS		
	GL-866A/866	GL-872	GL-872A
Filament Volts	2.5	5	5
Filament Amperes	5	10	6.75
Max. Inverse Peak Plate Volts	10,000	7,500	10,000
Average Plate Amps	0.25	1.25	1.25
Peak Plate Amps	1.0	5	5
PRICE	$1.50	$9.00	$11.00

* ICAS Ratings, Class C Telegraphy.
† CCS Ratings, Class C Telegraphy.

NOTE THESE NET PRICES:

GL-203A	$10.00
GL-211	10.00
GL-800	10.00
GL-801	3.45
GL-802	3.50
GL-803	28.50
GL-805	13.50
GL-806	22.00
GL-807	3.50
GL-809	2.50
GL-810	13.50
GL-811	3.50
GL-812	3.50
GL-813	22.00
GL-814	17.50
GL-815	4.50
GL-829	19.50
GL-833A	85.00
GL-837	7.50
GL-838	11.00
GL-845	10.00
GL-860	32.50
GL-866A 866	1.50
GL-872	9.00
GL-872A	11.00
GL-1623	2.50

GENERAL ELECTRIC

161-14-6900

FOR BETTER DELIVERIES

•

ANOTHER UTC PLANT

Added facilities in another UTC plant now bring the size of UTC to thirty times that in 1933. This new plant assures a continuance of UTC's fine delivery record.



For Better Products . . . **Continuous Research**

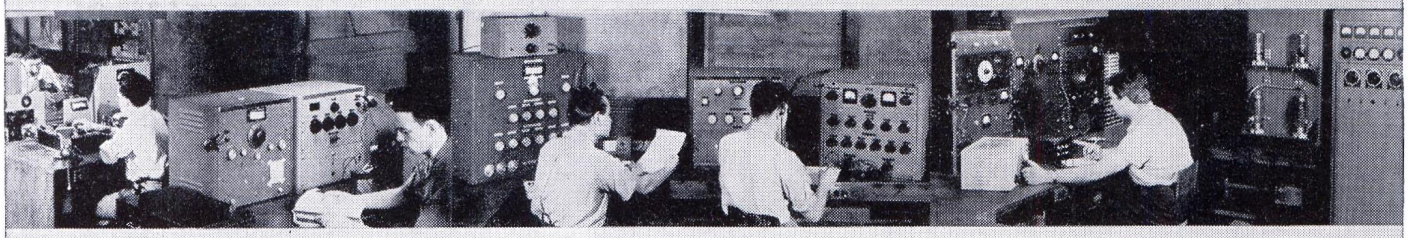

As an organization founded on research and design ingenuity, the UTC research laboratories are unusually fine. A continuous research and development program is maintained to improve the quality and dependability of UTC products. In addition, customers' problems and their solutions are handled by a competent staff of application engineers.

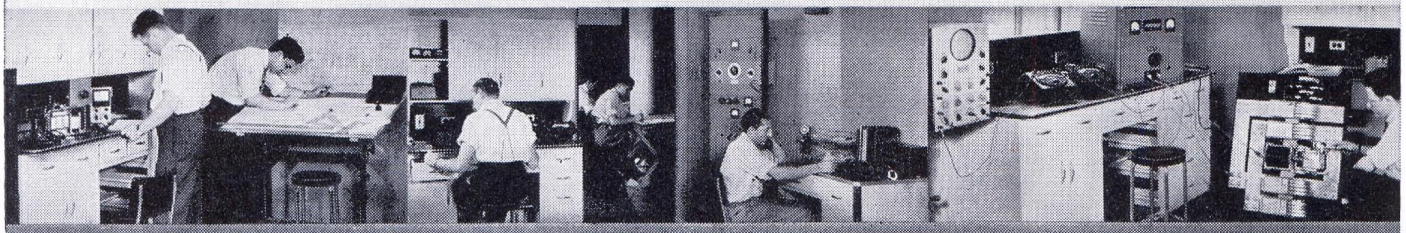

UNITED TRANSFORMER CORP.

150 VARICK STREET ★ NEW YORK, N. Y.

EXPORT DIVISION: 100 VARICK STREET NEW YORK, N. Y. CABLES: "ARLAB"

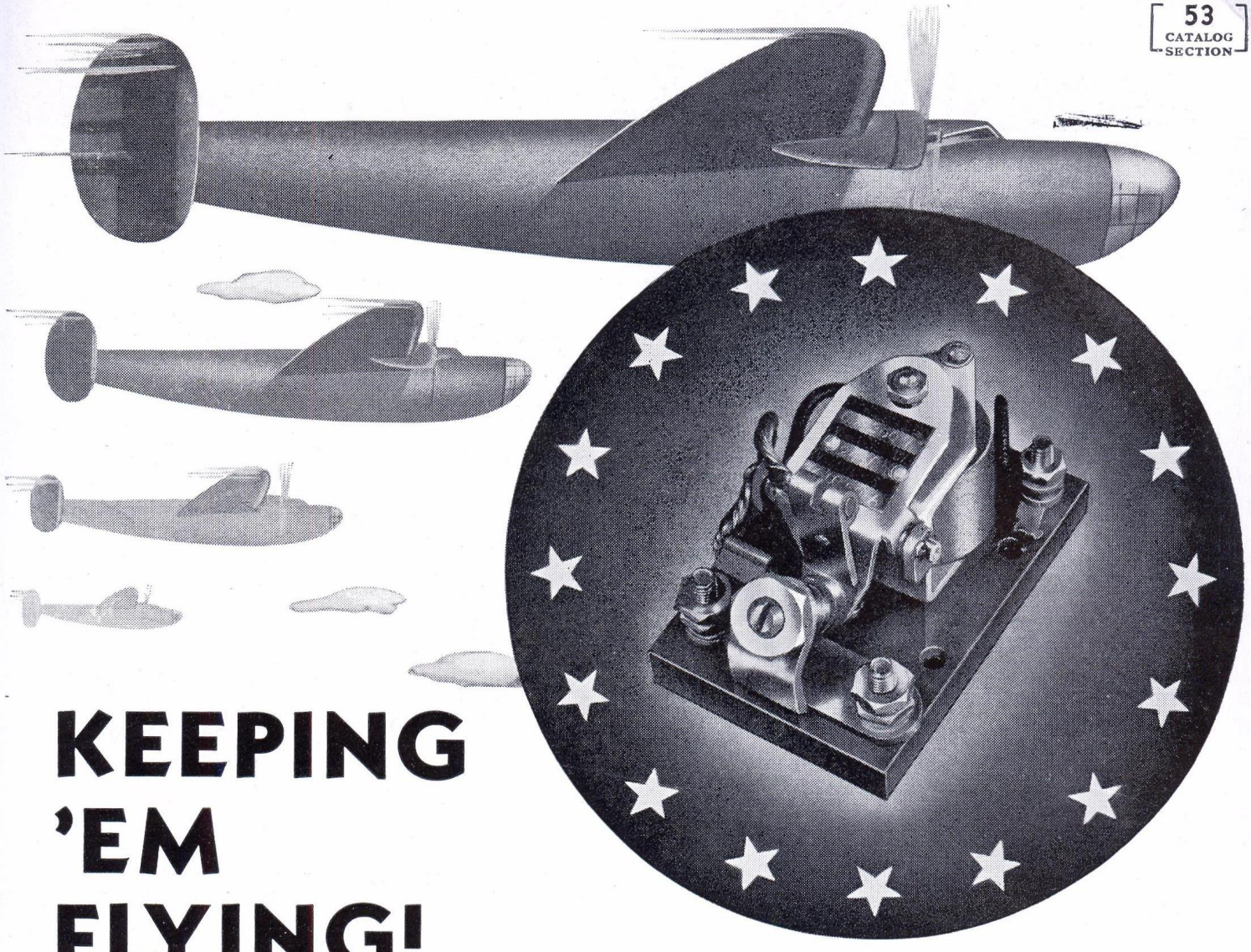

KEEPING 'EM FLYING!

SURE! . . . We're still making relays for amateur radio as well as for countless other civilian needs . . . but . . .

Like other leading manufacturers, Dunco is placing national defense requirements wholeheartedly first. From the air corps to the tank corps, throughout various other divisions of both army and navy, you'll find Dunco Relays specified for many of the most exacting jobs a relay can be called upon to perform. Duncos help, not only to "keep 'em flying," but to keep 'em rolling, floating, shooting, bombing and many other things as well.

Because of this tremendous demand, it isn't always possible to make civilian shipments as fast as we'd like to. However, we know we can count on your coöperation and understanding—just as we in turn want you to know that, at all times and under all conditions, you can count upon a continuance of the quality upon which the Dunco reputation has been based. Dunco means—and will continue to mean—dependability.

STRUTHERS DUNN, INC., 1311 CHERRY STREET, PHILADELPHIA, PA.

DUNCO RELAYS TIMERS

● In addition to a complete line of industrial types for standard as well as special requirements, Dunco offers a complete line of Relays for amateur radio and other communication uses. These include radio relays, time delay relays, midget keying relays, radio frequency relays, vacuum tube relays and other types not illustrated here. Write for the new Dunco Catalog and Relay Data Book. Dunco engineers welcome the opportunity to coöperate in supplying suitable units for practically any application.

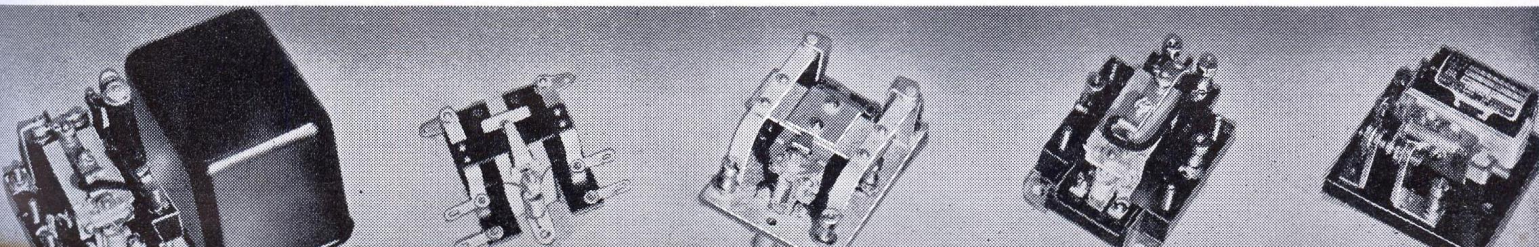

HAMMARLUND

PRECISION FOR BETTER RADIO

"HQ-120-X" AMATEUR RECEIVER

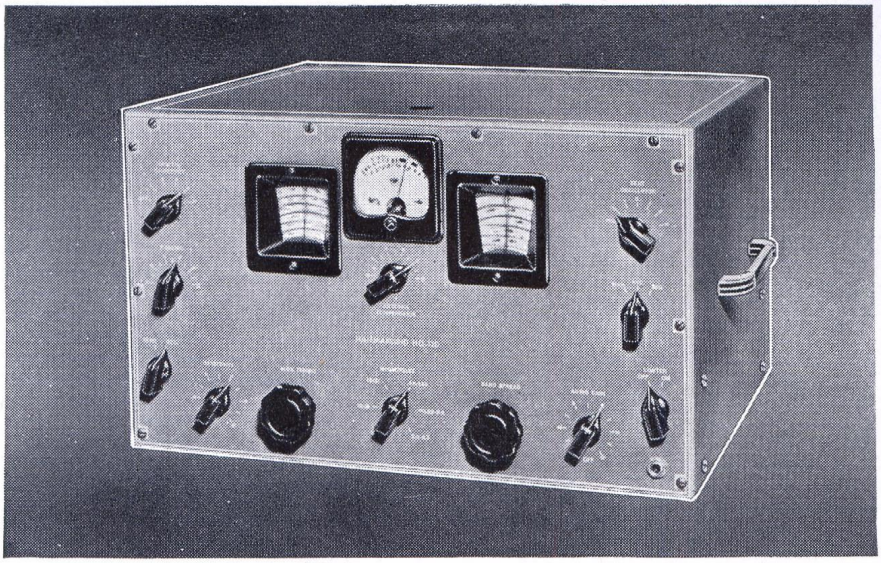

THE HAMMARLUND "HQ-120-X" meets the most critical demands of amateur and professional operators. Hammarlund engineers have gone beyond ordinary practice in designing this new and outstanding receiver. This ultra-modern 12-tube superheterodyne covers a continuous range of from 31 to .54 mc. (9.7 to 555 meters) in six bands, taking in all important amateur, communication, and broadcast channels. The "HQ-120-X" is not to be confused with modified broadcast sets. Two years were required to develop it. This is a special receiver with special parts throughout. Every wave range is individual—that is, each range has its own individual coil and a tuning condenser of proper value for maximum efficiency; thus, including the broadcast band does not decrease efficiency at high frequencies. Besides having all the necessary features for perfect short wave reception, such as A.V.C., beat oscillator, send-receive switch, phone jack and relay terminals, the "HQ-120-X" also includes a new and outstanding crystal filter circuit which is variable in 6 steps from full bandwidth to razor edge selectivity. This permits the use of the crystal filter for the reception of both voice and music. It is no longer necessary to contend with serious heterodyne interference. These annoying disturbances can be phased out with the phasing control on the panel. Other features include drift compensation for improved stability; a new and accurate "S" meter circuit for measuring incoming signal strength; antenna compensator to compensate for various antennas, and 310 degrees band spread for each amateur band from 80 to 10 meters. The band spread dial is calibrated in megacycles for each of these amateur bands. The main tuning dial is calibrated in megacycles throughout the entire range of the receiver. Gray finish. Rack adapter $6.00 extra.

Prices include Speaker and Tubes

Code	Type	Tuning Range	Speaker	Net Price
HQ-120-X	Crystal	31—.54 mc.	10" P.M. Dyn.	$168.00
Speaker cabinet (metal) 12½" x 12½" x 7 inches				3.90

Special model finished in black..... $168.00 Net
Speaker Cabinet, black to match..... 3.90 Net

Send for Descriptive Booklet!

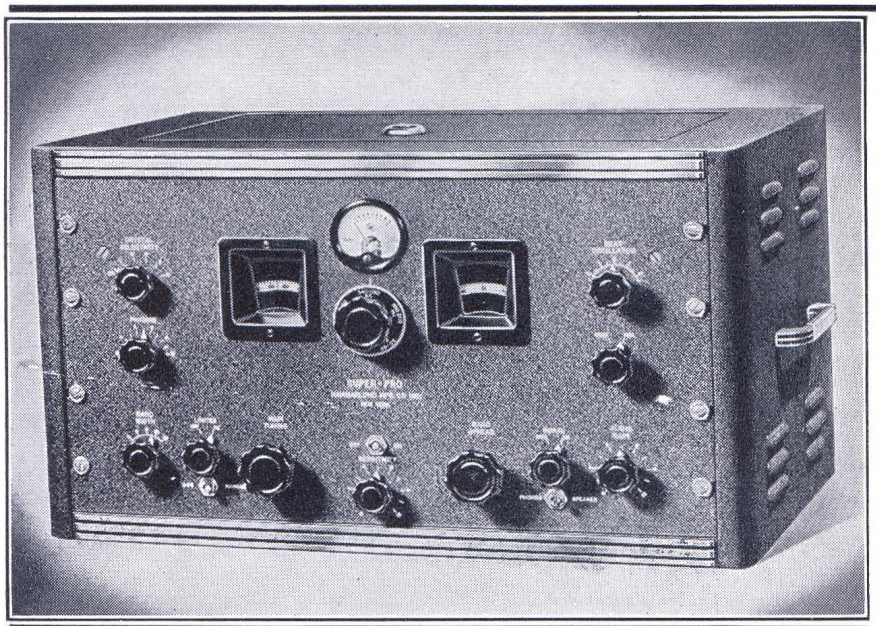

NEW "SUPER-PRO"

THIS new 18-tube "SUPER-PRO" includes all the outstanding features which have made the "Super-Pro" famous, and in addition many recent developments have been added. The new "Super-Pro" has a variable selectivity crystal filter. This crystal filter has five positions of selectivity—3 for phone and 2 for CW. The variable crystal filter, in addition to the variable band width I.F., provides a selectivity range of from less than 100 cycles to approximately 16 kc. The new "Super-Pro" also has an improved noise limiter designed to minimize interference caused by automobile ignition systems and disturbances of similar nature. Maximum image suppression is obtained with two stages of high selectivity tuned R.F. ahead of the first detector. Three stages of I.F. are employed and there are three stages of high fidelity audio amplification resulting in an output of approximately 14 watts. A new and improved "S" meter has been installed in the "Super-Pro" for accurately reporting relative signal strength. Other features include full band-spread on all bands; beat oscillator; send-receive switch; relay connections; phone connections; connections for phono-pickup; beautifully finished modernistic cabinet. The sensitivity of the "Super-Pro" is better than 1 microvolt. Available in rack mounting type at $10.50 extra.

Code	Type	Spkr.	Tuning Range	Net Price
SP-210-X	Crystal	10"	15—560 meters	$318.00
SP-210-SX	Crystal	10"	7½—240 meters	318.00
SP-220-X	Crystal	12"	15—560 meters	330.00
SP-220-SX	Crystal	12"	7½—240 meters	330.00
PSC	10" speaker cabinet to match receiver			5.10

Special Models Covering Other Wave Ranges Available On Order

Write for Circular!

HAMMARLUND MANUFACTURING CO., INC., 424-438 West 33rd Street, New York City

HAMMARLUND

"TC" TRANSMITTING CONDENSER

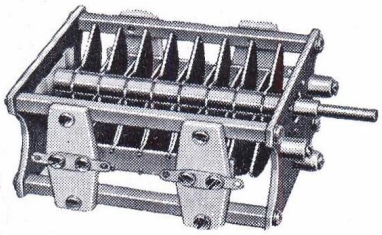

An entirely new moderately priced, heavy duty transmitting condenser, featuring heavy aluminum end plate, Isolantite insulation, non-inductive, self-cleaning silver plated beryllium contacts, full floating rotor bearing, non-magnetic rotor assembly, polished heavy aluminum plates accurately spaced. All, except type "L," have round edge plates of .040" thickness. Type "L" has .025" plates with plain edges. Type "F" has .230", 7500 V. air gap. Type "G," .200", 6750 V. Type "H," .171", 6000 V. Type "J," .100", 4250 V. Type "K," .084", 3750 V. Type "L," .070", 2000 V. air gap.

Available in a wide variety of capacities and working voltages, these condensers are ideal for modern up-to-date transmitters with power outputs ranging from 200 watts to 1 kw.

Type	Capacity	Overall Length	List
TC-220-L	220 mmf.	4 1/16	$ 6.30
TC-440-L	465 mmf.	5 7/8	9.10
TC-90-K	95 mmf.	2 15/16	5.70
TC-165-K	167 mmf.	4 1/16	6.50
TC-220-K	222 mmf.	4 5/8	8.00
TC-330-K	335 mmf.	6 1/2	10.00
TC-240-J	250 mmf.	6 1/2	10.20
TC-25-H	23.5 mmf.	2 15/16	5.10
TC-50-H	53 mmf.	4 1/16	6.00
TC-110-H	115 mmf.	6 1/2	9.00
TC-40-G	46 mmf.	4 1/16	7.00
TC-65-G	75 mmf.	5 7/8	8.80
TC-100-G	110 mmf.	7 1/2	11.20
TC-150-G	165 mmf.	10 5/8	14.80
TC-55-F	60 mmf.	5 7/8	8.00

"TCD" SPLIT STATOR TYPES

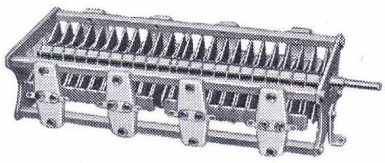

These split-stator transmitting condensers are identical to the singles shown above, except that the stator sections are individual. Ideal for push-pull power amplifiers ranging in power up to 1 kw. They are of convenient size and lend themselves to construction of compact apparatus. Overall dimensions in back of panel are given in the accompanying table. The capacity values listed are for each section. The last letter in the code represents plate spacing and voltage rating. These are identical to those given above. Type "M"—plain plates, .030" air gap.

Type	Capacity	Overall Length	List
TCD-500-M	490 mmf.	4 1/16	$10.30
TCD-80-L	90 mmf.	4 1/16	8.30
TCD-210-L	215 mmf.	5 7/8	10.40
TCD-90-K	95 mmf.	4 5/8	9.40
TCD-165-K	167 mmf.	6 1/2	11.50
TCD-325-K	335 mmf.	11 1/16	20.50
TCD-240-J	250 mmf.	11 1/16	19.00
TCD-50-H	53 mmf.	6 1/2	9.80
TCD-110-H	115 mmf.	11 1/16	16.00
TCD-40-G	46 mmf.	7 1/2	10.50
TCD-75-G	85 mmf.	11 1/16	14.50
TCD-55-F	60 mmf.	11 1/16	13.70

"N" NEUTRALIZING CONDENSERS

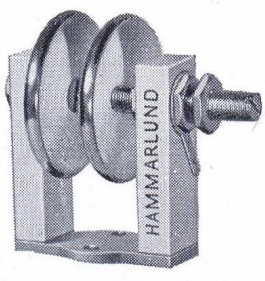

Improved neutralizing condensers with heavy polished aluminum plates. Rounded edges. Isolantite. Fine adjusting screw. Positive lock. Horizontal adjustment. Type "N-10", 2 5/8" high x 1 3/16" deep. "N-15" 4 15/16" high x 3 1/2" deep. "N-20", 5 11/16" high x 4" deep.

Code	List
N-10—(2.1—10 mmf.)	$4.60
N-15—(3.2—14 mmf.)	8.70
N-20—(3.8—14 mmf.)	9.30

"MTC" TRANSMITTING CONDENSERS

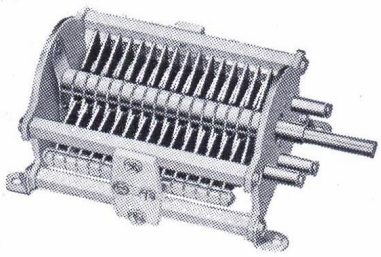

Compact types, Isolantite insulation. Base or panel mounting. Polished aluminum plates. Stainless steel shaft. Size of 150 mmf. with .070" plate spacing only 4 5/8" behind panel. All type "B" condensers have round edge plates .025" in thickness. Type "C" has plain edge plates .025" thick. Self-cleaning wiping contact.

Code	Capacity	List
MTC-20-B	22 mmf.	$4.10
MTC-35-B	33 mmf.	4.30
MTC-50-B	50 mmf.	4.60
MTC-100-B	100 mmf.	5.30
MTC-150-B	150 mmf.	6.10
MTC-50-C	46 mmf.	4.10
MTC-100-C	105 mmf.	4.40
MTC-150-C	150 mmf.	4.80
MTC-250-C	255 mmf.	5.30
MTC-350-C	360 mmf.	5.80

"MTCD" SPLIT-STATOR TYPES

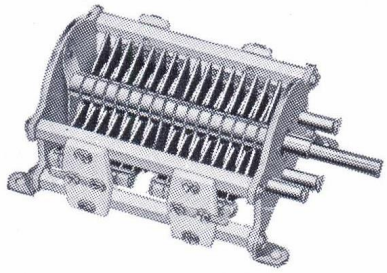

Same outstanding features as MTC singles except that stator sections are separate. Model 100-B with .070" plate spacing, only 5 3/4" behind panel. "B" models—rounded plates "C" models—plain plate edges.

Code	Capacity	List
MTCD-20-B	22 mmf. per sect.	$5.60
MTCD-35-B	33 mmf. per sect.	6.00
MTCD-50-B	50 mmf. per sect.	6.50
MTCD-100-B	100 mmf. per sect.	8.75
MTCD-50-C	46 mmf. per sect.	5.50
MTCD-100-C	105 mmf. per sect.	6.00
MTCD-150-C	150 mmf. per sect.	6.50
MTCD-250-C	255 mmf. per sect.	7.50

A NEW LINE OF TRANSMITTING AND RECEIVING CONDENSERS

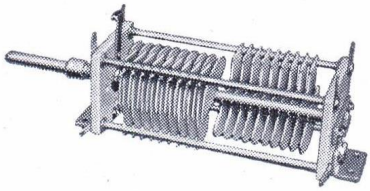

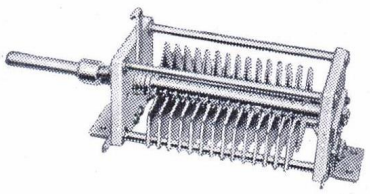

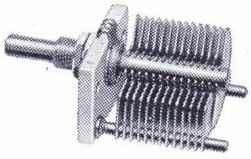

The new HFA and HFB receiving and transmitting condensers are the latest in condenser design. The HFB transmitting condenser, for example, has fully insulated rotor and control shaft permitting higher operating voltage for a given plate spacing. This new design results in more compact and efficient condenser construction and the insulated control shaft reduces the danger of electric shock to the operator. The HFB's are made in both dual and single stator types and in all important capacities.

The HFA receiving condenser is a sturdier midget condenser intended for use in portable and aviation equipment where conditions of operations demand a better and more solid condenser. These, too, are available in a wide variety of size with both single and dual stators. All types, both HFA and HFB are of 100% soldered construction with brass plates, cadmium plated. Isolantite end plates.

Send for Latest Catalog!

HAMMARLUND MANUFACTURING CO., INC., 424–438 West 33rd Street, New York City



THERE ARE STILL SOME THINGS IN WHICH A MAN CAN PUT HIS TRUST

In a changing world where nearly everything is in a state of flux, many things which formerly we considered "standard" have fallen out of favor. ¶ Today, amid the barrage of noisesome claims and counter claims, it becomes increasingly difficult to know just where to place one's confidence. ¶ Sometimes a man must rely upon his natural instinct alone — as when the first robin pours his melody upon the frosty morning air. One KNOWS then that Spring is on the way.

* * *

In the same way, there are many men who know instinctively that a transformer with the Kenyon Trade Mark upon it can be relied upon today just as Kenyon Transformers have been reliable for over twenty years.

KENYON TRANSFORMER CO., Inc.

840 BARRY STREET • NEW YORK, N. Y.



Manufacturers of

Audio transformers • plate and filament transformers • filter reactors • auto transformers • modulation transformers • portable broadcast transformers • laboratory standard transformers • submersion proof plug-in transformers • and transformers for every electronic, electrical or industrial use.

CATALOG No. 41 SENT UPON REQUEST

Meissner PRECISION-BUILT PRODUCTS

the choice of discriminating Amateurs

for dependable performance!

ALWAYS UP-TO-DATE

Meissner equipment, as exemplified by the two items described on this page, is always in step with the times! Meissner Engineers are constantly working to develop new products to meet the ever-increasing demand for advancement in the art. The soundly-engineered Transceiver below is a recent result of such effort. At the same time, products already established are receiving continual study for improvement. Witness the new parallax-proof vernier dial on the Signal Shifter at the right—an instrument that might well have rested on its laurels!

DESIGNED FOR "ASSOCIATION"

Meissner Amateur Equipment is designed first for PERFORMANCE—but APPEARANCE is also given very careful consideration! Wherever possible, panel designs and finishes are uniform, adding a definite element of "ASSOCIATION" so necessary to the Amateur who takes pride in the professional appearance of his equipment!



2½-METER TRANSCEIVER

A powerful portable instrument for Amateur, Commercial or Military use! Features TELESCOPING SELF CONTAINED vertical antenna; superregenerative circuit with SEPARATE QUENCH OSCILLATOR; rear STORAGE COMPARTMENT for mike and phones; non-critical circuit operates on "B" supply of from 90 to 180 volts; ruggedly built for Commercial or Military service; entirely stable — easy to tune; and, most unique of all, a DUAL microphone input channel for either CRYSTAL or CARBON mike!! Only 11" wide, 12" high and 6¼" deep. Furnished complete with tubes (7A4, 6G6G, 6S7), less batteries, phones and mike.

Model 9-1081 — Price on Application

Other AMATEUR PRODUCTS

SIGNAL SPOTTER
Crystal Oscillator
SIGNAL BOOSTER
4-band Preselector
MC 28-56
5 & 10-m. Converter
UNI-SIGNAL SELECTOR
Audio Output Filter
SIGNAL SPLICER
Antenna Matching Unit
SIGNAL CALIBRATOR
Frequency Standard
TRAFFIC SCOUT
9-tube Receiver
TRAFFIC MASTER
14-tube Receiver
CRYSTAL OVEN
Temperature Control
CRYSTAL FILTER
Complete Unit
B-F OSCILLATOR
Complete Unit
NOISE SILENCER
Adapter Unit
WAVE TRAPS
RELAYS
CHOKES
INSULATORS
CONDENSERS
SWITCHES
I-F TRANSFORMERS

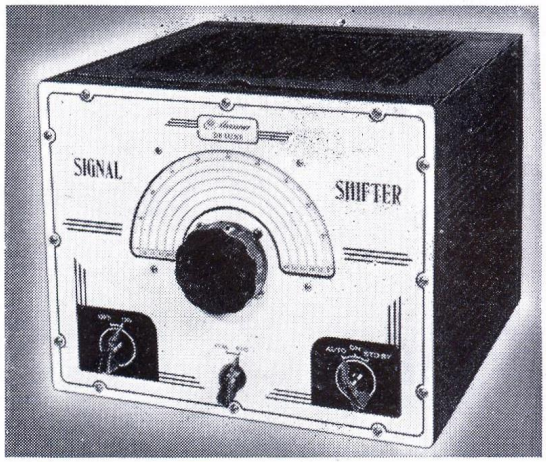

SIGNAL SHIFTER

The standard ECO—accepted as such thruout the Amateur fraternity. Permits instant change of operating frequency, directly from the operating position; link coupled to any transmitter. Ability to operate on ANY frequency in any band gives great latitude in avoiding QRM and placing the signal where it will do the most good. Absolutely stable; gives crystal performance on all frequencies; voltage regulated and temperature compensated. Complete with tubes.

Model 9-1058 Net Price.....$52.25

INSTRUCTION MANUAL



New Edition! Contains detailed instructions, schematics and pictorial diagrams on all kits and complete units in the line. Many additional pages of charts, tables and useful data for the experimenter. Articles on F-M, E-C-O and Coil Design; 168 pages 8½" by 11"; available at your distributor or write direct.

Only **50c** *Net*

WRITE TODAY FOR FREE COMPLETE CATALOG

Every Amateur and Experimenter needs this complete guide describing and illustrating over 600 Meissner Precision-Built Products; no obligation whatsoever, just ask for your copy—a postal card will do!

Address Department Q-42

Meissner MT. CARMEL ILLINOIS

"PRECISION-BUILT PRODUCTS"

For National Defense

JOHNSON



JUST A FEW OF THE MANY JOHNSON STOCK PARTS. VARIATIONS OR SPECIAL PARTS AVAILABLE IN QUANTITY ON SPECIAL ORDER.

parts for Government—Commercial—Amateur

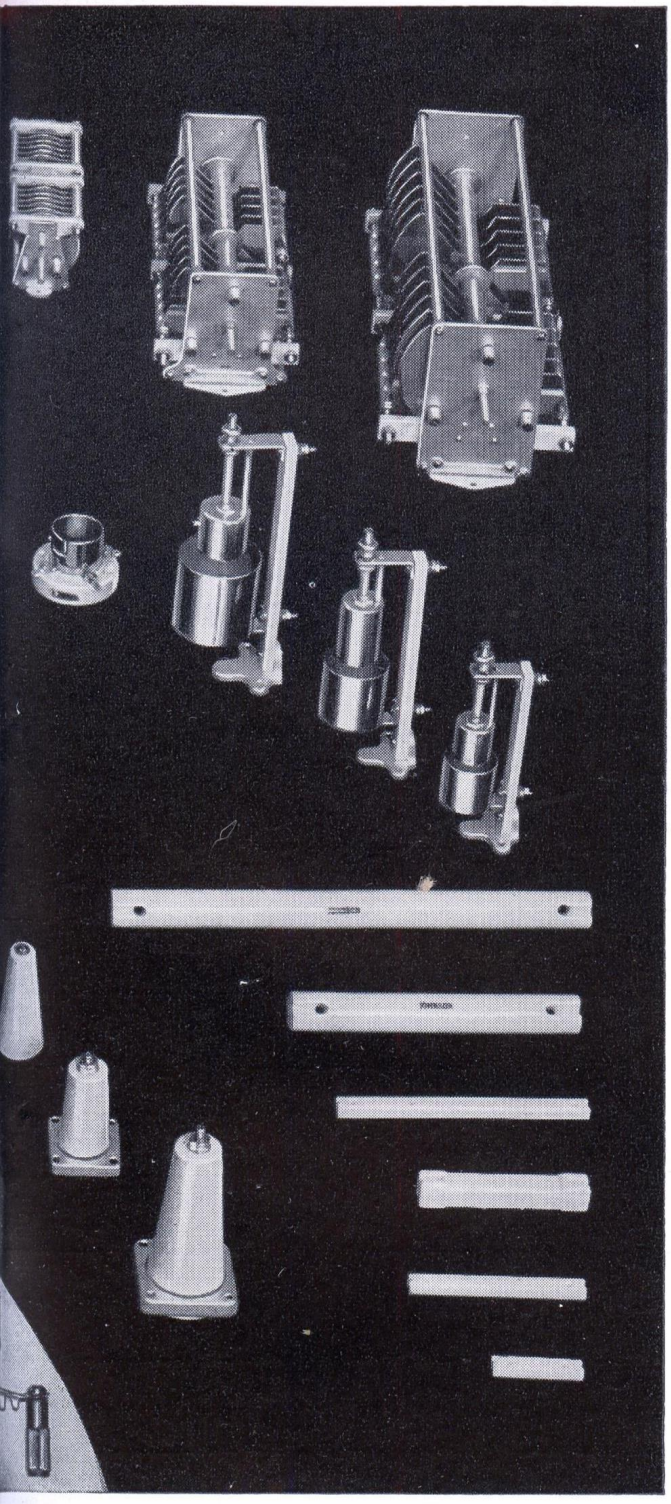

National Defense demands perfect coordination of every effort from major diplomatic policies to minor mechanical details. Radio communication is one of the most vital links in this coordinating effort. Government agencies, Broadcast Stations, Manufacturers and exacting Amateurs are demanding Johnson Parts because years of experience has proven their mechanical and electrical superiority.

Condensers — Inductors — Tube Sockets — Plugs and Jacks — Insulators — Copper Tubing — Concentric Line — Flexible Concentric Cable — can be obtained through any Authorized Johnson Jobber.

ASK FOR A COPY OF CATALOG 967M.



E. F. JOHNSON CO.
WASECA, MINNESOTA
EXPORT: 25 WARREN ST., NEW YORK, N. Y.
"MANUFACTURERS OF RADIO TRANSMITTING EQUIPMENT"

GAMMATRON TUBES

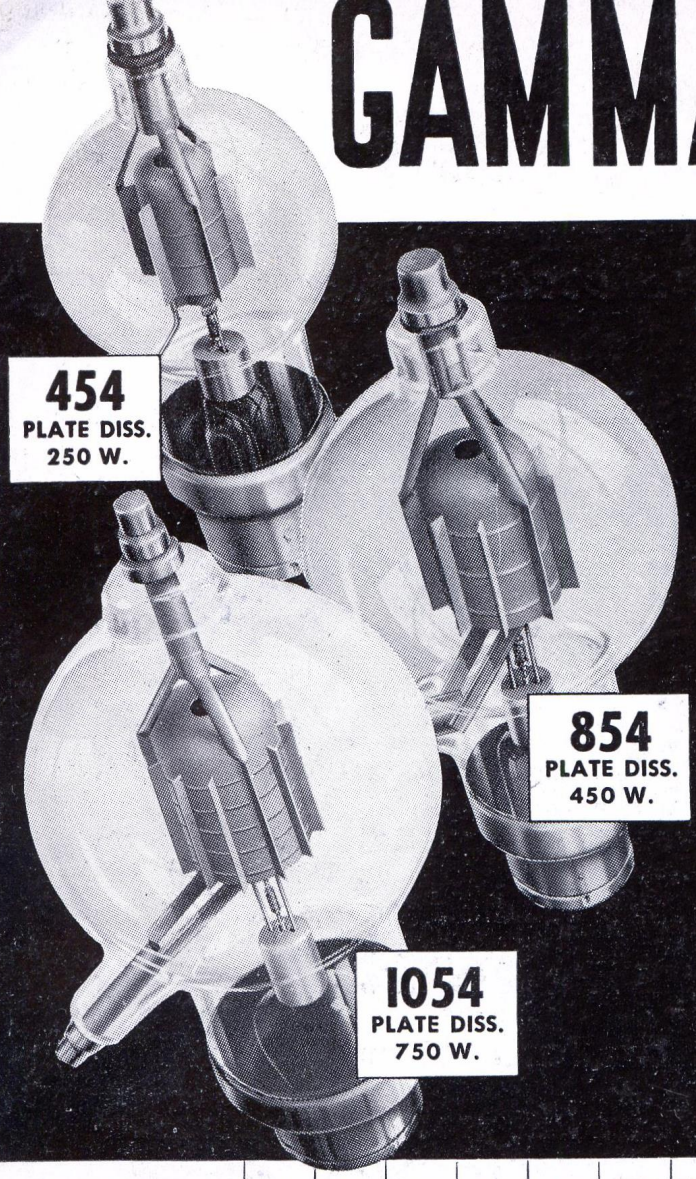



Developed in the Gammatron plant the new types 454, 854 and 1054 have copper to glass seals and special plate, grid and filament design to give a new high in UHF performance. Other features: ability to stand high plate voltages, complete protection against failure through overloads and extra long life.

Fourteen years of pioneering and experience in tantalum tubes are built into this complete line covering a power range of 50 to 5000 watts. Also available are variations of these types and high vacuum tantalum rectifiers.

The Gammatron engineers responsible for these developments will be glad to help with your special problems.

HEINTZ AND KAUFMAN LTD.
SOUTH SAN FRANCISCO CALIFORNIA U·S·A·

TYPE NO.	24	54	152L	158	254	257*	304L	354C	354E	454L	454H	654	854L	854H	1054L	1554	2054A	3054
MAX. POWER OUTPUT: Class 'C' R.F.	90	250	610	200	500	230	1220	615	615	900	900	1400	1800	1820	3000	3600	2000	5300
PLATE DISSIPATION: Watts	25	50	150	50	100	75	300	150	150	250	250	300	450	450	750	1000	1200	1500
AVERAGE AMPLIFICATION FACTOR	25	27	10	25	25		10	14	35	14	30	22	14	30	13.5	14.5	10	20
MAX. RATINGS: Plate Volts	2000	3000	3000	2000	4000	4000	3000	4000	4000	5000	5000	4000	6000	6000	6000	5000	3000	5000
Plate M.A.	75	150	500	200	225	150	1000	300	300	375	375	600	600	600	1000	1000	800	2000
Grid M.A.	25	30	75	40	40	25	150	60	70	60	85	100	80	110	125	250	200	500
MAX. FREQUENCY, Mc.: Power Amplifier	200	200	175	100	175	150	175	50	50	150	150	50	125	125	100	30	20	30
INTERELECTRODE CAP: C g—p u.u.f.	1.7	1.8	5	4.6	3.6	0.04	9	3.8	3.8	3.4	3.4	5.5	5	4	5	11	18	15
C g—f u.u.f.	2.5	2.1	7	4.7	3.3	13.8 In.	12	4.5	4.5	4.6	4.6	6.2	6	8	8	15.5	15	25
C p—f u.u.f.	0.4	0.5	0.4	1.0	1.0	6.7 Out.	0.8	1.1	1.1	1.4	1.4	1.5	0.5	0.5	0.8	1.2	7	2.5
FILAMENT: Volts	6.3	5.0	5-10	12.6	5.0	5.0	5-10	5	5	5	5	7.5	7.5	7.5	7.5	11	10	14
Amperes	3	5	13-6.5	2.5	7.5	7.5	13-26	10	10	11	11	15	12	12	21	17.5	22	45
PHYSICAL: Length, Inches	4¼	5 7/16	7¾	4¾	7	6¾	7¾	9	9	10	10	10⅜	12½	12½	16½	18	21¼	30¾
Diameter, Inches	1⅜	2	2½	2	2⅝	2⅝	3½	3⅜	3⅜	3¾	3¾	3¾	5	5	7	6	6	9
Weight, Oz.	1½	2½	8	4	6½	6	9	6½	6½	7	7	14	14	14	42	56	66	200
Base	Small UX	Std. UX	Johnson #213	Std. UX	Std. 50 Watt	Giant 7 Pin	Johnson #213	Std. 50 Watt	Std. 50 Watt	Std. 50 Watt	Std. 50 Watt	Std. 50 Watt	Std. 50 Watt	Std. 50 Watt	Johnson #214	HK 255	W.E. Co.	HK 255
*Beam Pentode.																		
NET PRICE	4.75	8.00	30.00	18.50	13.50	27.50	65.00	24.50	24.50	27.50	27.50	75.00	75.00	75.00	175.00	225.00	300.00	395.00

WRITE FOR FULL DATA ON ALL GAMMATRONS

Learn Code the EASY Way

Beginners, Amateurs and Experts alike recommend the **INSTRUCTOGRAPH,** *to learn code and increase speed.*

Learning the INSTRUCTOGRAPH way will give you a decided advantage in qualifying for Amateur or Commercial examinations, and to increase your words per minute to the standard of an expert. The Government uses a machine in giving examinations.

Motor with adjustable speed and spacing of characters on tapes permit a speed range of from 3 to 40 words per minute. A large variety of tapes are available — elementary, words, messages, plain language and coded groups. Also an "Airways" series for those interested in Aviation.

MAY BE PURCHASED OR RENTED

The INSTRUCTOGRAPH is made in several models to suit your purse and all may be purchased on convenient monthly payments if desired. These machines may also be rented on very reasonable terms and if when renting should you decide to buy the equipment the first three months rental may be applied in full on the purchase price.

ACQUIRING THE CODE

It is a well-known fact that practice and practice alone constitutes ninety per cent of the entire effort necessary to "Acquire the Code," or, in other words, learn telegraphy, either wire or wireless. The Instructograph supplies this ninety per cent. It takes the place of an expert operator in teaching the student. It will send slowly at first, and gradually faster and faster, until one is just naturally copying the fastest sending without conscious effort.

BOOK OF INSTRUCTIONS

Other than the practice afforded by the Instructograph, all that is required is well directed practice instruction, and that is just what the Instructograph's "Book of Instructions" does. It supplies the remaining ten per cent necessary to acquire the code. It directs one how to practice to the best advantage, and how to take advantage of the few "short cuts" known to experienced operators, that so materially assists in acquiring the code in the quickest possible time. Therefore, the Instructograph, the tapes, and the book of instructions is everything needed to acquire the code as well as it is possible to acquire it.

MACHINES FOR RENT OR SALE



The Instructograph

ACCOMPLISHES THESE PURPOSES:

FIRST: *It teaches you to receive telegraph symbols, words and messages.*

SECOND: *It teaches you to send perfectly.*

THIRD: *It increases your speed of sending and receiving after you have learned the code.*

With the Instructograph it is not necessary to impose on your friends. It is always ready and waiting for you. You are also free from Q.R.M. experienced in listening through your receiver. This machine is just as valuable to the licensed amateur for increasing his speed as to the beginner who wishes to obtain his amateur license.

Postal Card WILL BRING FULL PARTICULARS IMMEDIATELY

THE INSTRUCTOGRAPH CO.

4707 SHERIDAN ROAD CHICAGO, ILLINOIS



SOLAR CAPACITORS

FOR NATIONAL DEFENSE PROTECT WITH QUALITY

Engineers Do Not Guess—They Know! Protect amateur rigs with the same high quality built into Solar Capacitors for the Armed Service Branches of the Government.

DRY ELECTROLYTIC CAPACITORS
WET ELECTROLYTIC CAPACITORS
PAPER CAPACITORS
MICA CAPACITORS
CAPACITOR ANALYZERS

SOLAR MFG. CORP. **BAYONNE, N. J.**

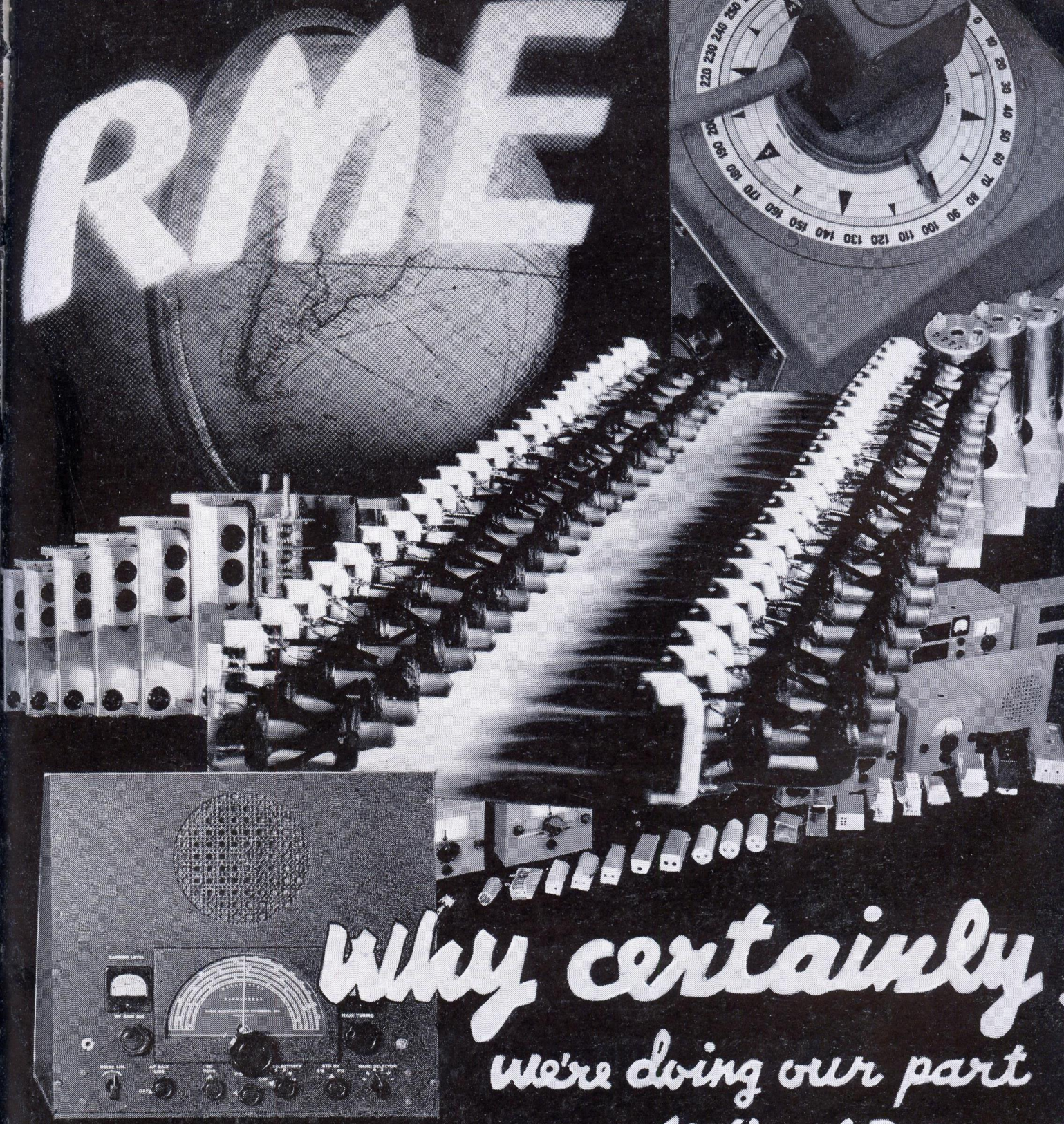

why certainly

we're doing our part for National Defense

BUT WE ALSO HAVE SOME FINE RECEIVERS AVAILABLE FOR IMPROVING YOUR HOME STATION

OUR NEW LITERATURE IS AVAILABLE

RME TIME WILL TELL

Fine Communications Equipment

RADIO MFG. ENGINEERS, Inc.

PEORIA, ILL



The B & W LINE BECOMES

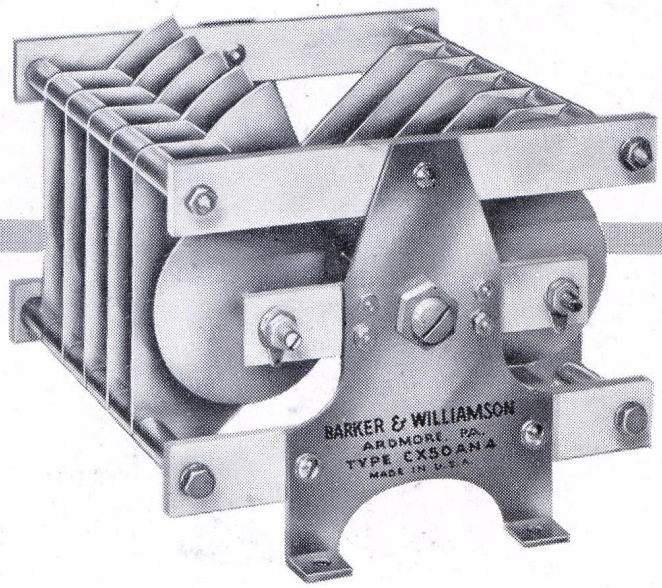



In fulfilling the exacting communications requirements of Democracy's armed forces, it is only logical that leading manufacturers should place a steadily increasing demand upon B & W for Variable Air Condensers and Air Inductors. For, not only does B & W equipment meet the unusually rigid specifications . . . equally important, this equipment has proved its dependability in actual service time and again on the battle fronts of Europe. We are proud of this record of performance, and we consider it both an honor and a privilege during these trying times to work to the full limits of our ability in supplying all of the B & W materials we may be called upon to make for defense. Although this may mean some delays in supplying materials for our many friends in amateur radio, we know you will understand. We know we can count on your continued loyalty just as we want you to know you can count on ours, even though the greater loyalty we all owe to National Defense must necessarily come first.

● The B & W Type CX Variable Air Condenser, illustrated above, is the practical basis for a symmetrical amplifier tank circuit. A great improvement over ordinary variable air condensers, its heavy end plates and improved construction assure maximum efficiency in a compact unit only half the length of most conventional dual condensers. Built-in neutralizers and built-in coil mounting are optional features. Stock types are available in 0.500" and 0.250" plate spacing.

B & W VARIABLE AIR CONDENSERS

A LINE OF DEFENSE

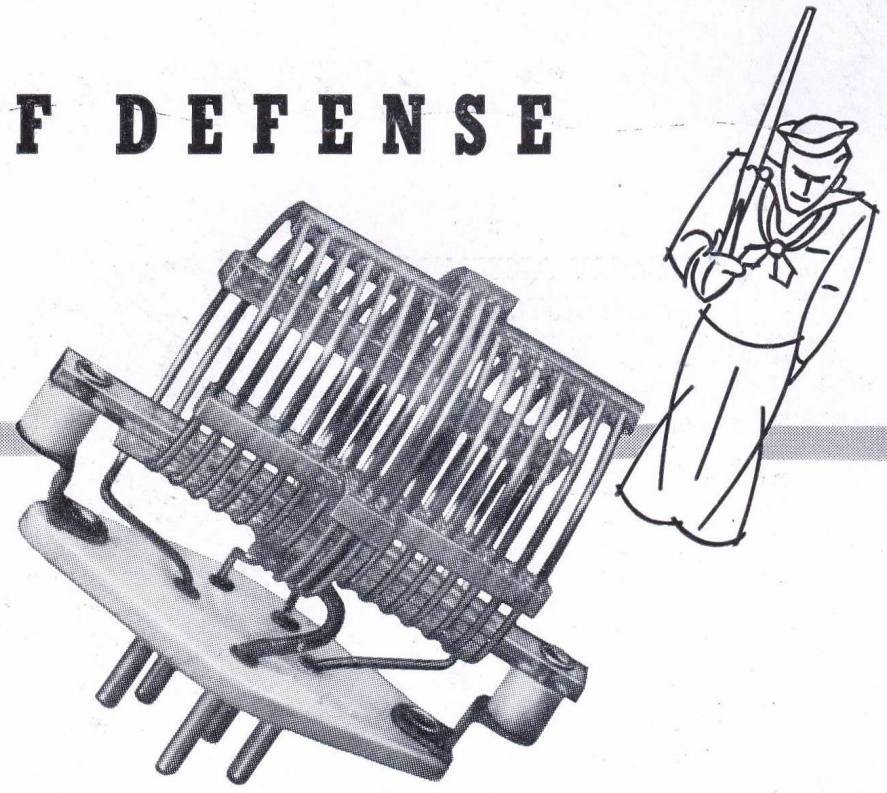

Although quite a few Defense specifications call for special units or assemblies, the majority of these orders call for the same B & W units which have become standard with hams throughout the world — and for the same reasons! Ruggedness, versatility, compactness, economy, and all-around dependability under the most exacting conditions of use — these are the qualities which have made B & W products famous in times of peace — and they are the qualities which remain foremost in B & W products today. We're hurrying to meet the greatly increased demand — but we won't be slipshod. We're short of some materials — but we won't skimp. We're faced with our share of the difficult problems confronting most manufacturers today — but we're not going to let them get us down. Wherever and whenever you use a B & W product — whether in your amateur shack or on duty with the armed forces of Democracy — you can count on it for faithful, dependable performance!

BARKER & WILLIAMSON, Ardmore, Penna.

● B & W low-power inductors, such as the 75-watt B & W JUNIOR illustrated above, are the last word for limited-space jobs. One of the most popular B & W coils, the JUNIORS far surpass, both in ruggedness and efficiency, most of the larger, more bulky coils of comparable rating. They head an illustrious family—from the big, heavy-duty 1-kw. Type HDVL thru a long list of Air Inductors in a wide variety of sizes and ratings—a coil for practically every conceivable inductance application!

B & W AIR INDUCTORS

Get Highest Efficiency with Dependable

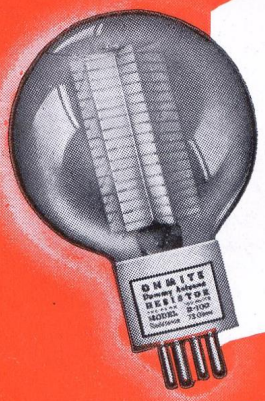

DUMMY ANTENNA RESISTORS

To check R. F. power, determine transmission line losses, check line to antenna impedance match. Helps tune up to peak efficiency. Non-inductive, non-capacitive, constant in resistance. 100 and 250 watt sizes in various resistances.

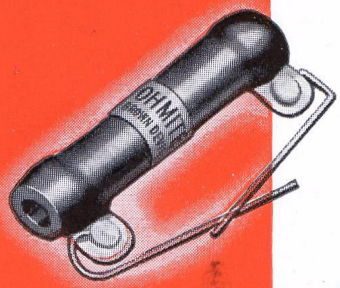

BROWN DEVIL RESISTORS

Small, extra sturdy, wire wound vitreous enameled resistors for voltage dropping, bias units, bleeders, etc. Proved right in amateur and commercial installations the world over. 10 and 20 watt sizes in resistances up to 100,000 ohms.

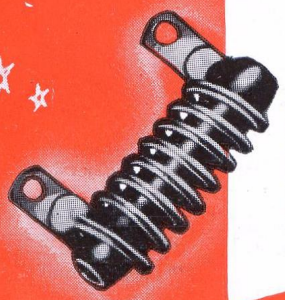

PARASITIC SUPPRESSOR

Small, light, compact non-inductive resistor and choke, designed to prevent u.h.f. parasitic oscillations which occur in the plate and grid leads of push-pull and parallel tube circuits. Only 1¾" long overall and ⅝" in diameter.

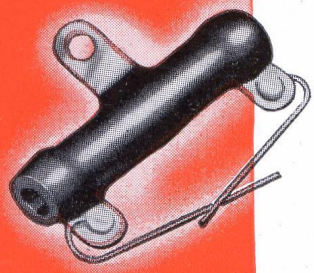

CENTER-TAPPED RESISTORS

For use across tube filaments to provide an electrical center for the grid and plate returns. Center tap accurate to plus or minus 1%. Wirewatt (1 watt) and Brown Devil (10 watt) units, in resistances from 10 to 200 ohms.

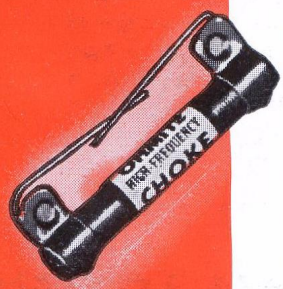

R. F. PLATE CHOKES

High frequency solenoid chokes designed to avoid fundamental or harmonic resonance in the amateur bands. Single-layer wound on low power factor steatite cores, with moisture-proof coating. Built to carry 1000 M.A. 5 stock sizes from 2½ meters to 160 meters.



ADJUSTABLE DIVIDOHMS

You can quickly adjust these handy Dividohms to the exact resistance you want, or put on one or more taps wherever needed. 7 sizes from 10 to 200 watts. Many resistance values up to 100,000 ohms.

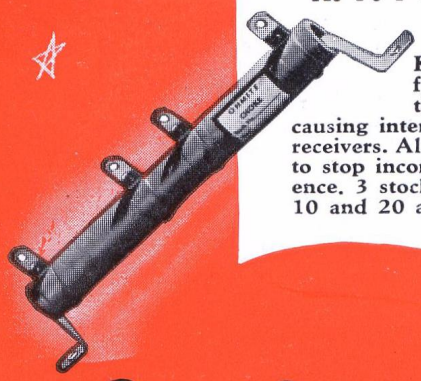

R. F. POWER LINE CHOKES

Keep R.F. currents from going out over the power line and causing interference with radio receivers. Also used at receivers to stop incoming R.F. interference. 3 stock sizes, rated at 5, 10 and 20 amperes.

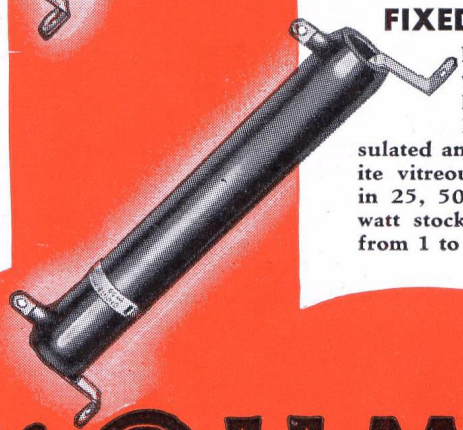

FIXED RESISTORS

Resistance wire is wound over a porcelain core, permanently locked in place, insulated and protected by Ohmite vitreous enamel. Available in 25, 50, 100, 160 and 200 watt stock sizes, in resistances from 1 to 250,000 ohms.

Be Right with OHMITE

RHEOSTATS ★ RESISTORS ★ CHOKES ★ TAP SWITCHES

Ohmite Vitreous Enamel is unexcelled as a protective and bonding covering for resistors and rheostats.

OHMITE Rheostats ★ Resistors ★ Chokes ★ Switches

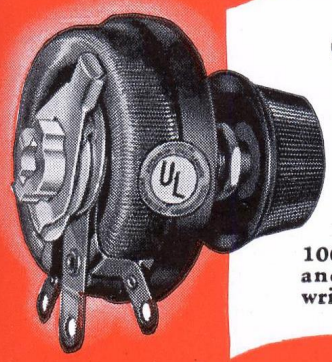

CLOSE-CONTROL RHEOSTATS

Keep power tube filaments at rated value for efficiency and long tube life. All ceramic vitreous enameled. Available in 25, 50, 75, 100, 150, 225, 300, 500, 750 and 1000 watt sizes, for all tubes and transmitters. (Underwriter's Laboratories Listed.)

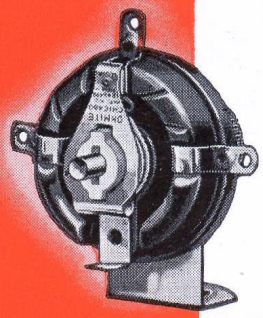

BAND-CHANGE SWITCH

For convenient control of rigs up to 1 K.W. Wide spacing and all ceramic insulation make it popular for meter switching and other high voltage applications.

Performance on the job quickly proves how much these Ohmite Units can really help you get the utmost efficiency from your rig. They're all veterans of service in amateur, commercial and defense communications. They've got what it takes to give you that extra measure of dependability when you need it most. That's why they are being used today more than ever in radio, electronic and industrial applications.

Besides the units shown here, there are Ohmite Non-Inductive Vitreous Enameled Resistors, Riteohm Precision Resistors, Hermetically-Glass Sealed Resistors, Direction-Indicator Rheostats, Attenuators, and many others.

★

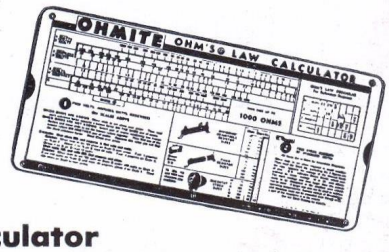

Ohmite Ohm's Law Calculator

Solves any Ohm's Law problem with one setting of the slide. All values are direct reading. No slide rule knowledge is necessary. Scales on two sides cover the range of currents, resistances, wattages and voltages commonly used in radio and commercial work. Size only 4⅛" x 9". Send only 10c in coin to cover handling cost.

AVAILABLE FROM AUTHORIZED DISTRIBUTORS EVERYWHERE

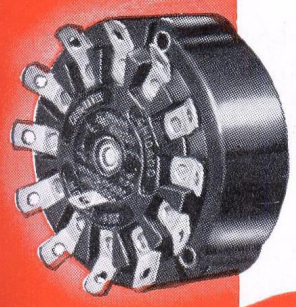

HIGH-CURRENT TAP SWITCHES

Compact, all ceramic, multi-point rotary selectors for A.C. use. Silver to silver contacts. Rated at 10, 15, 25, 50 and 100 amperes with any number of taps up to 11, 12, 12, 12, and 8 respectively. Single or tandem assemblies.

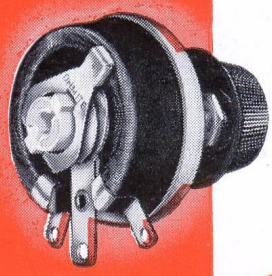

LC-2 LINK CONTROL

Simplified, compact, convenient panel regulation of the transfer of R.F. energy thru the link or low impedance line used in many transmitters. Eliminates swinging coupling coils. All ceramic vitreous enameled construction.



SEND FOR FREE CATALOG 18 Gives complete information—lists hundreds of stock values available from your Jobber. Write for your free copy of Catalog 18 today.

OHMITE MANUFACTURING COMPANY
4834 Flournoy Street, Chicago, U.S.A. Cable "Ohmiteco"



Tran

PROVED IN CO

RCA-8005 TRANSMITTING TRIODE DE LUXE — Most powerful of the small triodes, a single RCA-8005 in class C telegraph service will handle 300 watts input (ICAS) and deliver 220 watts of power with less than 8 watts of grid drive —on 5-meter operation! In plate-modulated service, it will take 240 watts (ICAS) with only 9 watts of grid drive. In self-rectifying oscillator circuits, two 8005's can deliver an output of 250 watts when the circuit efficiency is 75%. The RCA-8005 has the same physical dimensions as the famous 809 and 812.

Net price, **$7.00**

RCA-816 HALF-WAVE MERCURY-VAPOR RECTIFIER — Just the rectifier tube you have been waiting for—designed and priced for real economy in transmitters of 400 watts input or less. Small as a receiving tube but handles a peak inverse of 5000 volts, and a peak plate current of 0.5 ampere. Two RCA-816's in a full-wave circuit can deliver 1600 volts at 250 ma. with good regulation and exceptionally long life.

Net price, **$1.00** *each*

RCA-815 PUSH-PULL R-F BEAM POWER AMPLIFIER — Providing push-pull beam power within one tube envelope, the RCA-815 will deliver an output of over 40 watts (class C telegraphy) on all frequencies up to 150 Mc. It requires a plate voltage of only 400 to 500 volts, needs less than ½-watt of grid drive, and generally requires no neutralization on the lower frequencies, although it may at the higher frequencies. It takes 60 watts input (CCS) to 150 Mc and may be used at reduced input up to 225 Mc!

Net price, **$4.50**

RCA-931 MULTIPLIER PHOTOTUBE —The most amazing tube for its purpose ever announced! 9-stage, electrostatically-focused construction enables the RCA-931 to multiply the feeble currents produced by weak illumination on its photo cathode as much as 230,000 times—or a sensitivity of 2,300,000 microamperes per lumen! It is a tube that holds truly startling possibilities in countless applications involving extremely low levels of light.

Net price, **$12.00**

RCA-826 TRIODE FOR THE ULTRA HIGHS — Operates at maximum CCS ratings (60 watts plate dissipation) at frequencies as high as 250 Mc and at reduced ratings as high as 300 Mc. Specifically designed for use as an oscillator, r-f power amplifier, or frequency multiplier at the ultra-high frequencies. All terminals at one end of bulb permit use of short leads in neutralizing circuits.

Net price, **$19.00**

RCA-9001, 9002 and 9003 MIDGETS FOR UHF—Similar electrically to the famous Acorn types, these Midgets offer wide possibilities when used in the ultra-high frequencies, thanks to their many outstanding features. RCA-9001 is a sharp cut-off pentode for use as an r-f amplifier and detector. RCA-9002 is a triode for use as a detector, amplifier, and oscillator. RCA-9003 is a remote cut-off type pentode for use as a radio- and intermediate-frequency amplifier or mixer.

RCA-9001 and RCA-9003,
Net price, **$2.50** *each*
RCA-9002, Net price, **$2.00**

smitting Tubes

MMUNICATION'S MOST EXACTING APPLICATIONS

Whether you want a Midget tube for UHF experimentation on an amateur rig or a giant, air-cooled tube for commercial broadcasting, RCA makes it. The RCA line is complete—and, above all, each tube represents the utmost in long, trouble-free performance as proved time and again on radio's toughest jobs. When you invest in an RCA tube you invest in experience—not experiments!

TRANSMITTING TUBES

No.	Type	Max. Input	Net Price
801-A	Triode	42 Watts	$3.45
802	Pentode	33 Watts*	3.50
803	Pentode	350 Watts	28.50
804	Pentode	150 Watts*	15.00
805	Triode	315 Watts	13.50
806	Triode	1000 Watts*	22.00
807	Beam	75 Watts*	3.50
808	Triode	200 Watts	7.75
809	Triode	100 Watts*	2.50
810	Triode	620 Watts*	13.50
811	Triode	225 Watts*	3.50
812	Triode	225 Watts*	3.50
813	Beam	360 Watts	22.00
815	UHF Twin Beam	75 Watts*	4.50
825	Inductive Output	100 Watts	34.50
826	UHF Triode	125 Watts	19.00
828	Beam	270 Watts*	17.50
833-A	Triode	2000 Watts*	85.00
834	UHF Triode	125 Watts	12.50
1623	Triode	100 Watts*	2.50
1624	Beam	54 Watts	3.50
1628	UHF Triode	50 Watts	32.00
8000	Triode	620 Watts*	13.50
8001	Beam	300 Watts	27.50
8003	Triode	330 Watts	12.00
8005	De Luxe Triode	300 Watts*	7.00

*ICAS Rating

HALF-WAVE MERCURY-VAPOR RECTIFIERS

No.	Max. Peak Inverse Voltage	Max. Average Plate Current	Net Price
816	5,000 Volts	.125 a.	$1.00
866-A/866	10,000 Volts	0.25 a.	1.50
872	7,500 Volts	1.25 a.	9.00
872-A	10,000 Volts	1.25 a.	11.00

TELEVISION TUBES

No.	Description	Net Price
3AP4/906P4	3" Kinescope	$13.75
5AP4/1805P4	5" Kinescope (Short Bulb)	22.00
5BP4/1802P4	5" Kinescope	22.00
1847	Amateur Iconoscope	24.50

CATHODE-RAY TUBES

No.	Screen	Net Price
3AP1/906P1	3" Green Phosphor	$13.50
902	2" Green Phosphor	7.50
913	1" Green Phosphor	4.00

UHF ACORN TUBES

No.	Description	Net Price
954	Pentode. Amplifier, Detector	$5.00
955	Triode. Detector, Oscillator	3.00
956	Pentode. Super-Control Amp.	5.00
957	Triode. Low-drain filament	3.00
958	Triode. Low-drain filament	3.00
959	Pentode. Low-drain filament	5.00

UHF MIDGETS

No.	Description	Net Price
9001	Pentode. Amplifier, Detector	$2.50
9002	Triode. Detector, Oscillator	2.00
9003	Pentode. Super-Control Amplifier	2.50

RCA PUBLICATIONS and ENGINEERING DATA

Designed to keep you technically up-to-the-minute

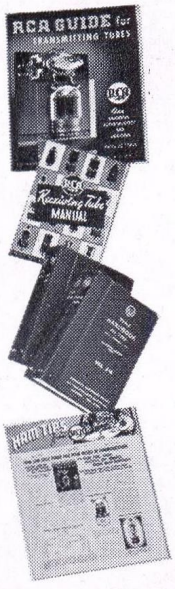

RCA GUIDE FOR TRANSMITTING TUBES—Covers all RCA air-cooled types plus typical circuits and much important new construction data. *Net price,* **25c**

RC-14 RECEIVING TUBE MANUAL—A virtual encyclopedia covering 333 different receiving tubes. Contains 256 pages including a new 38-page supplement. *Net price,* **25c**

HB-3 ALL TYPES TUBE HANDBOOK—An invaluable engineering reference manual on all RCA transmitting, receiving, cathode-ray, television and special purpose tubes. Sold on subscription basis—write Commercial Engineering Section, RCA, Harrison, New Jersey.

RCA HAM TIPS—The RCA periodical published exclusively for the amateur. Newsy, instructive and helpful. Ask your distributor for copies. **FREE ON REQUEST**

1275-B RECEIVING TUBE FOLDER—Includes salient characteristics, connections and special classification index of all RCA Receiving Tubes. **FREE ON REQUEST**

RCA PHOTOTUBE BOOKLET—Designed to give a clear understanding of phototube theory and operation. *Net price,* **10c**

INSTRUCTION BOOKLETS—These little booklets give full details on any individual RCA Transmitting or Special-Purpose Tube type. **FREE ON REQUEST**

TT-100 TRANSMITTING TUBE FOLDER—Shows at a glance maximum ratings and typical operating conditions of all RCA Transmitting and Special-Purpose Tubes. **FREE ON REQUEST**



A SERVICE OF THE RADIO CORPORATION OF AMERICA

PREMAX ANTENNAS AND ACCESSORIES

TUBULAR VERTICAL ANTENNAS

Probably the most enviable reputation for dependable, efficient performance under the most severe conditions has been earned by Premax Tubular Telescoping Vertical Antennas which are in wide use in amateur, commercial and defense services. Made in three styles, Premax Verticals furnish the answer to practically all antenna problems.

MONEL ANTENNAS—LESS INSULATOR

Premax Monel Antennas are for marine and other commercial uses where high strength, unusual resistance to corrosion and ability to withstand severe wind and shock strains are essential. Built up of multiple sections of hard-drawn Monel tubing, fully telescoping and adjustable.

No.	Ext. Length	Col. Length	Base O.D.	Top O.D.	Base I.D.	Wt. Each	List Price
MM-313	13′ 1″	6′ 9″	.625″	.489″	.555″	2¾ lbs.	**$45.00**
MM-419	19′ 1½″	6′ 9″	.750″	.489″	.666″	5 lbs.	**65.00**
MM-425	24′ 10½″	6′ 9″	.875″	.489″	.777″	8 lbs.	**90.00**
MM-430	30′ 0″	6′ 9″	1.063″	.489″	.935″	13 lbs.	**115.00**
MM-435	35′ 0½″	7′ 8″	1.063″	.489″	.935″	15 lbs.	**125.00**
USM-525	25′ 0″	7′ 6″	1.063″	.625″	.932″	12 lbs.	**110.00**
USM-325	25′ 0″	9′ 0″	1.312″	.750″	1.146″	30 lbs.	**200.00**

ALUMINUM ANTENNAS—LESS INSULATOR

Combining light weight, corrosion resistance and strength, Aluminum Antennas meet the most exacting requirements. Sections are of special drawn bright finish seamless aluminum, to withstand wind velocities up to 60 m.p.h.

No.	Ext. Length	Col. Length	Base O.D.	Top O.D.	Base I.D.	Wt. Each	List Price
AM-106	6′ 3″	6′ 3″	.313″	.125″	....	¼ lb.	**$5.00**
AM-312	12′ 2½″	6′ 3″	.500″	.125″	.334″	1½ lbs.	**10.00**
AM-518	18′ ½″	6′ 3″	.750″	.125″	.584″	3 lbs.	**20.00**
AM-124	23′ 8½″	6′ 3″	1.000″	.125″	.810″	5 lbs.	**30.00**
AM-230	29′ 2″	6′ 3″	1.312″	.125″	1.112″	7½ lbs.	**45.00**
AM-336	34′ 8″	6′ 3″	1.625″	.125″	1.425″	11 lbs.	**60.00**
AM-017	17′ 6″	17′ 6″	.969″	.500″	.689″	5½ lbs.	**40.00**
AM-035	34′ 9″	18′ 0″	2.000″	.500″	1.732″	19 lbs.	**100.00**

STEEL ANTENNAS—LESS INSULATORS

Premax Steel Antennas, heavily plated in bright cadmium, are highly resistant to corrosion and extremely strong. For vertical radiators, home receivers and commercial installations.

No.	Ext. Length	Col. Length	Base O.D.	Top O.D.	Base I.D.	Wt. Each	List Price
112-M	11′ 8″	6′ 1″	.656″	.500″	.556″	4 lbs.	**$5.50**
318-M	17′ 3″	6′ 2″	.875″	.500″	.775″	7 lbs.	**8.00**
224-M	22′ 9″	6′ 3″	1.063″	.500″	.963″	11 lbs.	**11.00**
130-M	28′ 3″	6′ 4″	1.250″	.500″	1.150″	15 lbs.	**14.00**
136-M	33′ 9″	6′ 5″	1.500″	.500″	1.400″	20 lbs.	**17.00**

CORULITE ELEMENTS

A ribbed style of great strength for horizontal mountings — light and rigid. Tubular units that are fully telescoping and adjustable.

No.	Ext. Length	Col. Length	Base O.D.	Top O.D.	Sec.	Wt. Each	List Price, pair
104-M	4′ 0″	4′ 0″	.625″	.625″	1	1 lb.	**$3.00**
108-M	8′ 2″	4′ 7″	.750″	.625″	2	2 lbs.	**6.00**
113-M	12′ 4″	4′ 8″	.875″	.625″	3	3½ lbs.	**10.00**
618-M	17′ 0″	5′ 3″	1.000″	.625″	4	5½ lbs.	**14.00**

(Sold Only in Pairs with Premax "Hairpin" Tuning Bar)

PREMAX POLICE ANTENNAS

Premax Police Antennas for police and commercial applications are of solid steel of high carbon content, heat-treated and oil-tempered. Rods of varying diameters, cold-drawn to rigidly held tolerances, are joined securely and permanently into a single graduated length, providing high flexibility, minimum wind resistance and indefinite life. A .001″ cadmium plate finish insures adequate corrosion protection. Available in Style A base (illustrated) or Style B with 7/16″ threaded stud complete with hexagon nuts and lock washers. Send for special Bulletin on Police Antenna and Mountings.

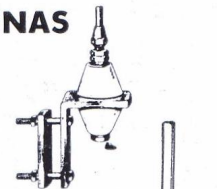

Type NA. Fits Style A Rod.



Type R. Fits Style A Rod

LIST PRICES ANTENNA RODS ONLY WITHOUT MOUNTINGS

Lgth.	Style A—Steel No.	List	Style B—Steel No.	List	Style A—Stainless No.	List	Style B—Stainless No.	List
72″	AC-172	$2.50	BC-172	$3.25	AS-172	$5.50	BS-172	$6.25
78″	AC-178	2.75	BC-178	3.50	AS-178	6.00	BS-178	6.75
84″	AC-184	3.00	BC-184	3.75	AS-184	6.50	BS-184	7.25
90″	AC-190	3.25	BC-190	4.00	AS-190	7.00	BS-190	7.75
96″	AC-196	3.50	BC-196	4.25	AS-196	7.50	BS-196	8.25

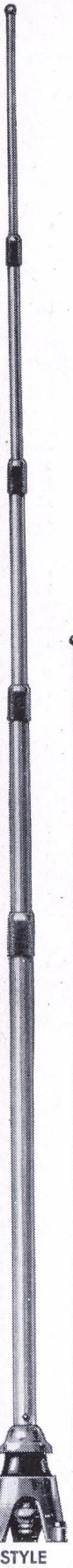

STYLE MM MONEL

POLICE STYLE A



STYLE M STEEL

BASE INSULATOR TYPE 1 — Heavy, wet-process, brown-glaze porcelain held in compression between hot-galvanized malleable cast iron castings. Tested compression rating up to 10,000 lbs. Height to top 7″, bolt circle 5¼″ wt. 7 lbs. complete.



No. 1P-24	3/4″ post	List	**$18.00**
No. 1P-26	13/16″ post	List	**18.00**
No. 1P-30	15/16″ post	List	**18.00**
No. 1P-44	1 3/8″ post	List	**18.00**
No. 1P-45	1 13/32″ post	List	**18.00**

BASE INSULATOR TYPE 2 — Light design for antennas up to 18′ high or greater length if properly guyed or supported with stand-off insulators. Brown-glaze porcelain with top and base supports cemented into insulator; metal parts galvanized. Porcelain diameter 3¼″; height to top of porcelain 6″; diameter flange 3¼″; wt. 4 lbs.



No. 2P-24 3/4″ post List **$5.50**

BASE INSULATOR TYPE 6 — For shipboard or rooftop and mobile truck mountings. Similar to Type 1 except lead-thru design avoids necessity of extra holes, bushings, etc. 6″ flanges with 6 bolt holes on 5″ circle; center stud for ½″ to 3″ decks; total height above deck 4½″; wt. 11½ lbs. in hot-galvanized or solid bronze.



No.		Galv.	Bronze
6P-24	3/4″ post	List **$25.00**	List **$45.00**
6P-26	13/16″ post	List **25.00**	List **45.00**
6P-30	15/16″ post	List **25.00**	List **45.00**
6P-44	1 3/8″ post	List **25.00**	List **45.00**
6P-45	1 13/32″ post	List **25.00**	List **45.00**

DECK BUSHING — Of brown-glaze porcelain cemented into hot galvanized malleable flange which bolts through rubber gasket to deck. Provides additional support for antenna in lieu of guying.



No.	I.D.	Total Length	Above Deck	Flange Diam.	Weight	List Each
5D-24	¾″	6″	3″	4″	2 lbs.	**$8.00**
5D-40	1¼″	8″	4¼″	4½″	3½ lbs.	**11.00**
5D-56	1¾″	8½″	4½″	5⅜″	4½ lbs.	**14.00**

INSULATORS TYPE 3 — Heavy duty for stand-off support or in pairs for complete mounting. Galvanized or brass fittings attached to threaded studs cemented in brown-glaze porcelain, 3″ in diameter. Height to top of porcelain 3″. Wt. 2 lbs.



No.	Fits Tube O.D.	List Each Galv.	List Each Pol. Brass
3S-16	1/2″	**$5.00**	**$7.50**
3S-20	5/8″	**5.00**	**7.50**
3S-24	3/4″	**5.00**	**7.50**
3S-28	7/8″	**5.00**	**7.50**
3S-32	1″	**5.00**	**8.00**
3S-34	1 1/16″	**5.00**	**8.00**
3S-40	1 1/4″	**5.00**	**9.00**
3S-42	1 5/16″	**5.00**	**9.00**
3S-48	1 1/2″	**5.00**	**10.00**
3S-52	1 5/8″	**5.00**	**10.00**

(Type 4 with clamp top and bottom can be supplied. Ask for prices.)

These were fair list prices at time of publication, but, due to conditions beyond control, are subject to change without notice. Get complete Catalog R-42 from your jobber or write direct.

GREATER COMMUNICATIONS RECEIVER Value!



Model EC-1. Six tubes. Three bands covering from 550 kc. to 30 mc. Electrical bandspread on all bands. Beat frequency oscillator. Self-contained PM dynamic speaker. AC/DC operation — 115/125 volts. Good selectivity and exceptional sensitivity. Every necessary feature for tiptop communications performances. ***Model EC-1,*** **$24.50**



Model EC-3. Ten tubes. Crystal filter (four position variable selectivity); calibrated bandspread; automatic noise limiter; preselection on all bands; two stage IF amplifier; fly-wheel tuning; separate 6″ PM speaker; CW monitor; 3 bands cover 550 kc. to 30 mc. Electrical bandspread. Operates on 115 volts AC/DC. ***Model EC-3,*** **$59.50**

Model EC-4. Nine Tubes. 4 bands cover 545 kc. to 30.5 mc. 2 loop aerials, turn independently of each other. Controls are: main tuning, bandspread, volume, power, BFO on-off switch, ANL on-off switch, standby switch. Self-contained PM speaker, bandspread logging scale provided for logging stations. Operates on 115 volts, AC/DC or batteries. Approximate weight, 9½ lbs. with batteries. Cabinet dimensions 9¾″ high, 6½″ wide, 5″ deep. ***Model EC-4,*** **$49.50**



Echophone COMMERCIAL

"The Ears of the World"

ECHOPHONE RADIO CO., 201 East 26th Street, Chicago, U. S. A.

Announcing

A NEW MASTER TELEPLEX!

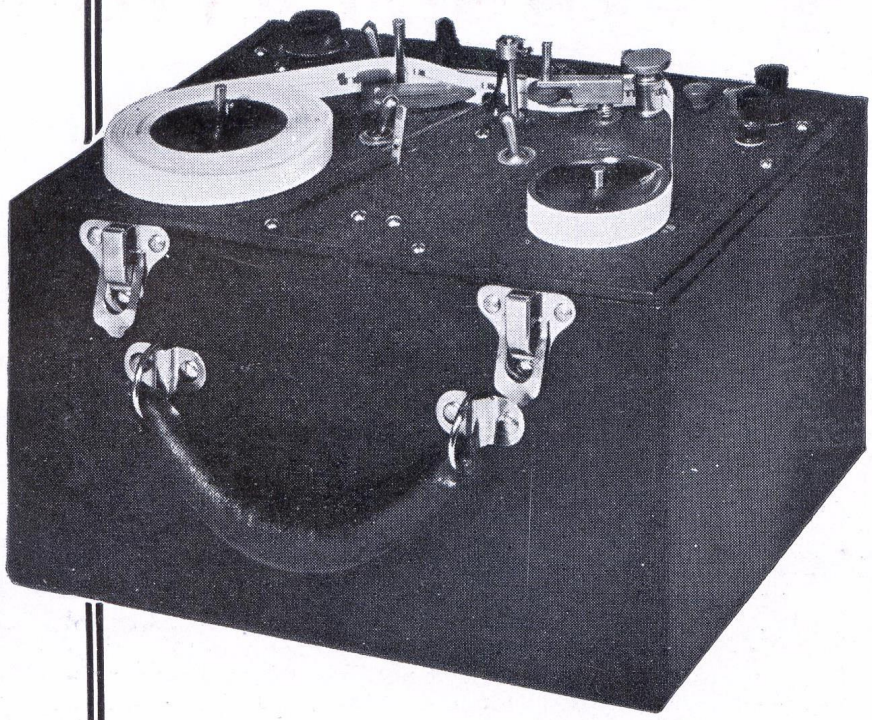

A Revolutionary New Instrument Brought to You by **TELEPLEX** — *The Name Synonymous with Code Success.*

NO PERFORATIONS
NO INK

A Marvel of Simplicity!

Master the Code with MASTER TELEPLEX

There is only one way to learn to receive the code signals and that is by listening to the signals. There is only one way to learn to send the signals properly and that is being able to see and hear your own signals.

With Master Teleplex you learn the code in the natural, easy, fascinating way. There is no guesswork because you actually see and hear what you are doing!

Learning to send PROPERLY is more difficult than learning to receive. Most people think sending is easy. Well, just ask the fellow who tries to receive it!

MASTER TELEPLEX will show you exactly how you make the characters, and then it will show you how to make them correctly!

Many national defense units are using Master Teleplex. All of those of the selective draft age should prepare themselves as much and as quickly as possible to render technical service. Radio telegraphy rates high in importance in every phase of national security!

Responsible National Defense units should write for full particulars of our special trial offer.

Catalogue QB explains fully the many interesting and fascinating features of Master Teleplex. Just send a post card asking for catalogue QB. No obligation

TELEPLEX COMPANY

107 HUDSON STREET
JERSEY CITY • N. J.

THERE ARE MANY REASONS *for preferring* ALSIMAG INSULATION

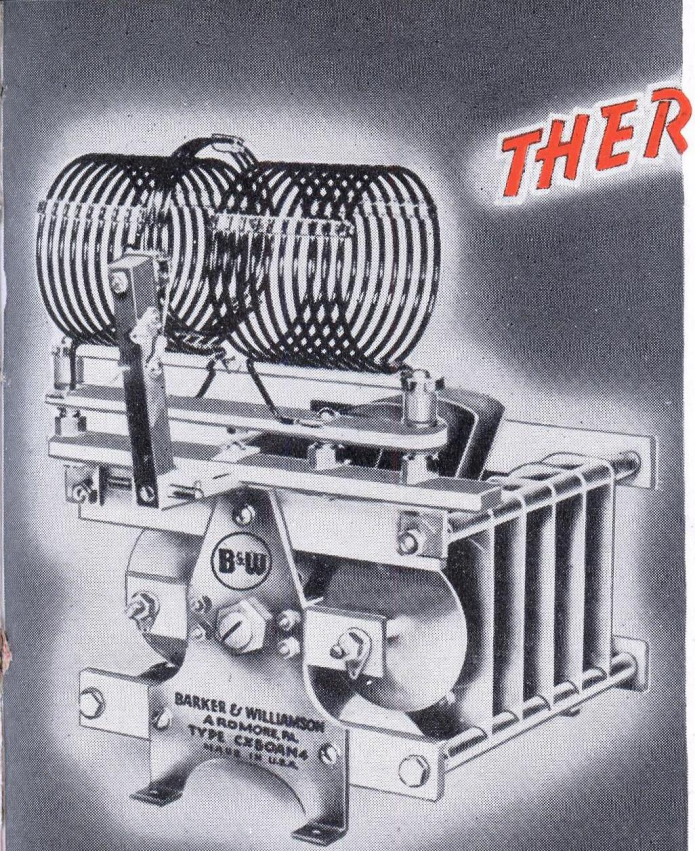

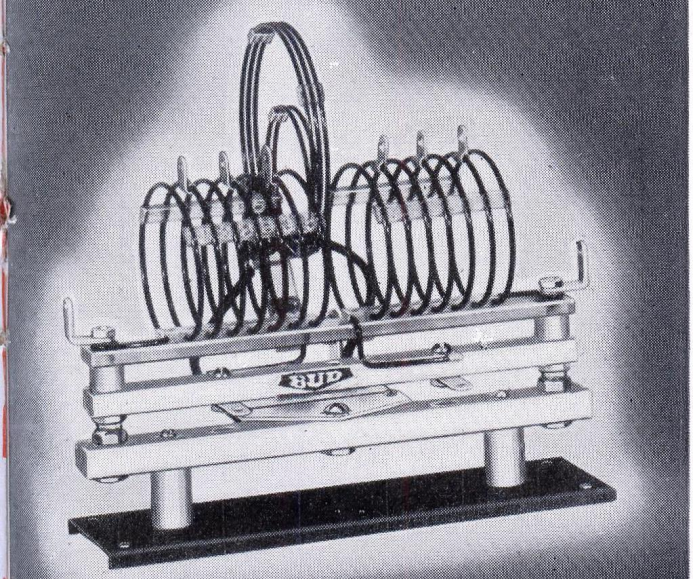

In these applications of AlSiMag 196 the most important physical characteristics are absolute and permanent rigidity, exceptionally high dielectric and mechanical strength and unusually low dielectric loss under all working conditions.

YOU GAIN in many ways when you specify ALSIMAG insulation. In the first place, by using ALSIMAG the manufacturer has the choice of many steatite ceramic compositions, each having definitely determined physical characteristics. Thus ALSIMAG is "right" for the application.

Next, ALSIMAG insulation is almost always custom-made in the size, shape and form required for the application. A perfectly adapted custom-made insulation requires the least possible amount of space, lowers the cost of assembly and frequently eliminates much extra material that would be required to mount and house a larger than necessary insulator.

Thus the demand for higher efficiency with compactness is ably met by ALSIMAG.

A new Property Chart giving the exact physical characteristics of the more frequently used ALSIMAG compositions will be sent you on request.

This advertisement is one of a series designed to give you a better understanding of the advantages of AlSiMag insulation. It is not a solicitation of business. Custom made AlSiMag is sold direct to the manufacturers.

ALSIMAG

Trade Mark Reg. U. S. Pat. Off.

FROM CERAMIC HEADQUARTERS

AMERICAN LAVA CORPORATION • CHATTANOOGA • TENNESSEE

CHICAGO • CLEVELAND • NEW YORK • ST. LOUIS • LOS ANGELES • SAN FRANCISCO • BOSTON • PHILADELPHIA • WASHINGTON, D.

Quality COSTS NO MORE!

You pay no more for Raytheon's extra quality. That is why amateurs and industry are buying Raytheon RK Tubes for long, trouble free operating life.





RAYTHEON RK

TYPE	CONSTRUCTION	FILAMENT Volts	FILAMENT Amps.	FILAMENT	PURPOSE	RATED VOLTAGES Plate	Grid	Screen Grid	Supp. Grid	POWER Pl. Diss. Max.	POWER Output	DRIVING POWER	MAX. HEIGHT	Amateur Net Price	TYPE
RK-12	Triode	6.3	3.0	Thor.	Osc. R-F Amp.	750	−100			25w	55w	5.2w	6 9/16″	$ 2.50	RK-12
					Class B Mod.	750	0			25w	100w*	3.4w*			
RK-20A	R-F Pentode	7.5	3.25	Thor.	Osc. R-F Amp.	1250	−100	300	0	40w	64w	1.6w	8 3/4″	15.00	RK-20A
					Osc. R-F Amp.	1250	−100	300	+45	40w	84w	1.6w			
					Supp. Mod. Phone	1250	−100	300	−45	40w	21w	1.5w			
RK-23	R-F Pentode	2.5	2.0	K	Osc. R-F Amp.	500	−90	200	0	10w	18w	0.5w	5 3/4″	4.50	RK-23
					Osc. R-F Amp.	500	−90	200	+45	10w	22w	0.5w			
					Supp. Mod. Phone	500	−90	200	−45	10w	6.0w	0.5w			
RK-24	Triode	2.0	0.12	Oxide	5 Meter Osc.	180	−45			1.5w	2.0w	0.5w	4 3/16″	2.25	RK-24
RK-25	R-F Pentode	6.3	0.9	K	CHARACTERISTICS SAME AS RK-23 SHOWN ABOVE								5 3/4″	3.95	RK-25
RK-28A	R-F Pentode	10.0	5.0	Thor.	Osc. R-F Amp.	2000	−100	400	0	125w	200w	1.6w	8 3/4″	28.50	RK-28A
					Osc. R-F Amp.	2000	−100	400	+45	125w	250w	1.6w			
					Supp. Mod. Phone	2000	−100	400	−45	125w	60w	1.6w			
RK-31	Triode	7.5	3.0	Thor.	R-F Amp.	1250	−80			40w	90w	3.9w	8 3/4″	10.00	RK-31
					Class B. Mod.	1250	0			40w	190w*	4.4w*			
RK-34	Dual Triode	6.3	0.8	K	Osc. R-F Amp.	300	−36			10w*	16w*	1.8w*	5 3/16″	3.50	RK-34
					Class B. Mod.	300	−15			10w*	13w*	0.5w*			
RK-37	Triode	7.5	4.0	Thor.	Osc. R-F Amp.	1500	−130			50w	122w	7w	6″	6.95	RK-37
					Class B. Mod.	1250	−35			50w	200w*	7.2w*			
RK-38	Triode	5.0	8.0	Thor.	Osc. R-F Amp.	2000	−200			100w	225w	10w	7 15/16″	13.50	RK-38
					Class B. Mod.	2000	−52			100w	330w*	5.8w*			
RK-39	Beam Type R-F Tetrode	6.3	0.9	K	Osc. R-F Amp.	600	−90	300		25w	36w	0.38w	5 3/4″	3.50	RK-39
RK-43	Dual Triode	1.5	.12	Oxide	Osc. R-F Amp.	135	−20				1.25w*	0.2w*	4″	1.50	RK-43
RK-47	Beam Type R-F Tetrode	10.0	3.25	Thor.	Osc. R-F Amp.	1250	−70	300		50w	120w	1.0w	8 3/4″	17.50	RK-47
RK-48A	Beam Type R-F Tetrode	10.0	5.0	Thor.	Osc. R-F Amp.	2000	−100	400		100w	250w	1.0w	8 3/4″	27.50	RK-48A
					Class B. R-F Amp.	2000	−35	400		100w	60w	0.22w			
RK-49	Beam Type R-F Tetrode	6.3	0.9	K	Osc. R-F Amp.	400	−50	250		21w	25w	0.2w	5 3/8″	1.25	RK-49
RK-51	Triode	7.5	3.75	Thor.	Osc. R-F Amp.	1500	−250			60w	170w	10w	7″	6.95	RK-51
RK-52	Triode	7.5	3.75	Thor.	Osc. R-F Amp.	1500	−120			60w	135w	7w	7″	6.95	RK-52
					Class B. Mod.	1250	0			62.5w	250w*	7.5w*			
RK-56	Beam Type R-F Tetrode	6.3	0.55	K	Osc. R-F Amp.	300	−40	300		8w	12.5w	0.1w	5 3/16″	3.00	RK-56
RK-57/805	Triode	10.0	3.25	Thor.	Osc. R-F Amp.	1500	−105			125w	215w	8.5w	8 7/16″	13.50	RK-57/805
					Class B Mod.	1500	−16			125w	370w*	7.0w*			
RK-59	Dual Triode	6.3	1.0	Oxide	Osc. R-F Amp.	500	−60			15w*	32w*	1.3w*	5 3/4″	4.50	RK-59
					Class B. Mod.	500	−17			15w*	30w*	0.9w*			
RK-60	Full W. Rect.	5.0	3.0	Oxide	HIGH VACUUM — 61 VOLT DROP — 750 V. R.M.S. PER ANODE. 250 MA. OUTPUT CURRENT								5 3/4″	2.75	RK-60
RK-62	Gas Triode	1.4	0.05	Oxide	Det.-Thyratron	45							4″	3.50	RK-62
RK-63	Triode	5.0	10.0	Thor.	Osc. R-F Amp.	3000	−200			200w	525w	17w	9 11/16″	22.00	RK-63
					Class B. Mod.	3000	−60			200w	800w	15w			
RK-63A	Triode	6.3	14.0	Thor.	CHARACTERISTICS SAME AS RK-63 SHOWN ABOVE								9 11/16″	22.00	RK-63A
RK-64	R-F Pentode	6.3	0.5	Oxide	Osc. R-F Amp.	300	−30	100	+30	6w	10w	0.18w	5 1/32″	3.50	RK-64
RK-65	Tetrode	5.0	14.0	Thor.	Osc. R-F Amp.	3000	−100	400	—	215	510	6	8 3/4″	34.50	RK-65
RK-66	Beam Type	6.3	1.5	Oxide	Osc. R-F Amp.	600	−60	300	—	30	40	0.5	5 3/4″	3.50	RK-66
RK-807	Beam Type	6.3	0.9	K	Osc. R-F Amp.	600	−50	250	—	25	37.5	0.22	5 3/4″	3.50	RK-807
RK-1851	Pentode	6.3	0.45	K	Television Amp.	300	−2	150					3 3/8″	2.10	RK-1851
866A/866	Half W. Rect.	2.5	5.0	Oxide	MERCURY VAPOR MAX. INVERSE PEAK 10,000 V. PEAK CURRENT 1.0 AMP.								6 9/16″	1.50	866A/866
872A	Half W. Rect.	5.0	10.0	Oxide	MERCURY VAPOR MAX. INVERSE PEAK 10.000 V. PEAK CURRENT 5.0 AMP.								8 1/2″	11.00	872A

*Indicates Value for Two Tubes or Two Sections of Dual Types

RAYTHEON PRODUCTION CORP.

NEWTON, MASS.

CHICAGO LOS ANGELES NEW YORK ATLANTA

WORLD'S LARGEST EXCLUSIVE RADIO TUBE MANUFACTURERS

In the Service of the Nation!

SHURE MICROPHONES

They give you the power, the efficiency, the clear, clean speech signals you want--plus other important Shure-engineered features that insure dependable day-in and day-out performance. That's why Shure Microphones are used today more than ever in Police, Amateur, Commercial and Defense Communications, as well as in Broadcasting, Recording and Public Address.

Shure Communications Microphones Are Part of a Great Line of Microphones for Every Purpose.



Voice Unidyne Model 55AV
Shure Pat. No. 2,237,298

VOICE UNIDYNE CARDIOID DYNAMIC Gives you all the advantages of special voice response, cardioid performance and dynamic ruggedness. Dead at rear. Picks up speech more distinctly — stops noise pick-up. Makes break-in 'phone easy. Ideal for outdoor or indoor use. High output. 25 ft. cable and cable connector.

Model 55AV. For 35-50 ohm circuits. List Price $47.00
Model 55BV. For 200-250 ohm circuits. List Price $49.50
Model 55CV. High impedance. List Price $49.50

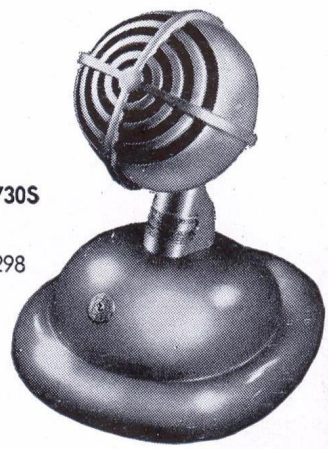

Uniplex Model 730S
Shure Pat. Nos.
2,198,424, 2,237,298

UNIPLEX CARDIOID CRYSTAL This high efficiency speech model is dead at rear — keeps room noise and echoes off the air — cuts thru static — makes break-in phone easy. R. F. filter protects against burnouts. Moisture-proofed Grafoil Bimorph Crystal. High output level (33 db below 1 volt for 10 bar speech signal). 7 ft. cable and cable connector.

Model 730SH. Without desk mount. List Price $35.50
Model 730S. With desk mount. List Price $39.00



Stratoliner Model 708S

STRATOLINER CRYSTAL In this modern communications microphone you get deluxe features at surprisingly low cost. High efficiency speech characteristic and high output level (29.7 db below 1 volt for 10 bar speech signal). Cuts thru noise and static. R.F. filter. Moisture-proofed Grafoil Bimorph Crystal. 7 ft. cable and cable connector.

Model 708SH. Without desk mount. List Price . . . $19.50
Model 708S. With desk mount. List Price . . . $23.00

SHURE



Super-Level Model 70ST

70ST SUPER-LEVEL CRYSTAL For years, a standout 'round the world. Very high output level (26 db below 1 volt for 10 bar speech signal) Assures clear, crisp speech — cuts noise and static. 7 ft. cable and cable connector.

Model 70STH. Without desk mount. List Price . . $22.50
Model 70ST. With desk mount. List Price . . . $26.00

707A CRYSTAL Shure quality at lowest cost. Smooth frequency response. High output. Bimorph Crystal, mechanically isolated. Iridescent Gray finish with highly polished plating on front grille. Spring cable protector.

Model 707A. With 7 ft. cable. List Price $12.50
Model 707A-25FT. Same with 25 ft. cable.
List Price $14.00



Model 707A



MILITARY-TYPE CRYSTAL Light, compact. Fits comfortably in the palm of the hand. Takes minimum space in portable equipment. Excellent frequency response and high output level. "On-Off" switch. Removable suspension hook. 7 ft. cable.
Model 750B. List Price $25.00

Military-type Carbon Microphones also available on special order.

FREE
Send for Complete Catalog 153H

Shure Patents Pending. Crystal Microphones licensed under patents of the Brush Development Company.

Available from Authorized Distributors Everywhere.

SHURE BROTHERS • "Microphone Headquarters" • 225 W. Huron St. • Chicago, U. S. A. • Cable: Shuremicro
Designers and Manufacturers of Microphones, Pickups, Cutters and other Acoustic Devices

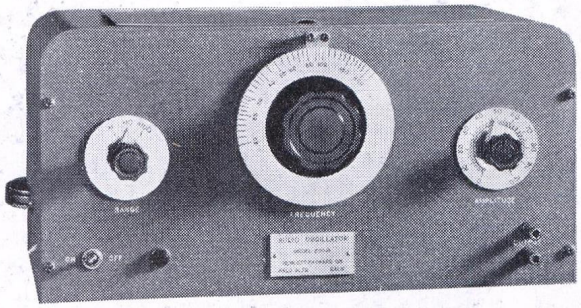

Series 200 Resistance Tuned Oscillators — Consists of hp. Resistance Tuned Oscillator only. Available in cabinet or for relay rack mounting in models A, B, C and D, covering frequency range from 7 c.p.s. to 200 kc.

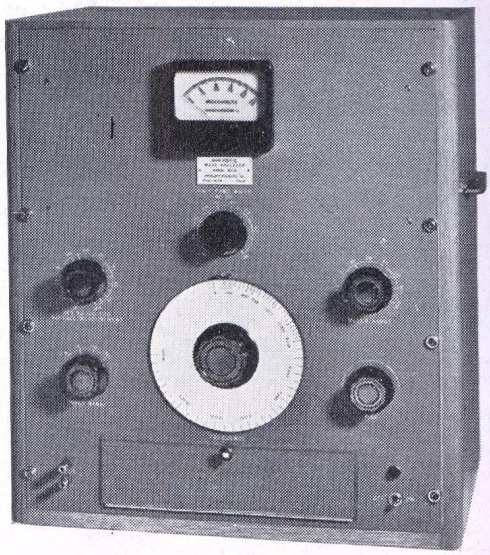

Model 300 A — Harmonic Wave Analyzer — Measures individual components of complex waves from 30 c.p.s. to 16,000 c.p.s.

hp

Laboratory Instruments

FOR SPEED AND ACCURACY

–hp– Instruments are the result of long research in a well equipped laboratory and have been thoroughly tested in all types of service. Of outstanding merit is the new resistance tuned audio oscillator, which has many advantages. In brief, it is a stabilized amplifier with regeneration supplied through a frequency selective resistance capacity network. The oscillation frequency is stable and the thermal drift extremely low. Furthermore, the thermal drift is not magnified as is the case with the beat frequency oscillator. A balancing circuit automatically selects the proper operating point for the oscillator. The result . . . a stable oscillator having constant output and very low distortion.

Other –hp– instruments include these designed for measuring wave form: The Harmonic Wave Analyzer, and Distortion Analyzers. Selectivity of the Wave Analyzer can be varied over a wide range by means of a unique selective amplifier. Accuracy, flexibility, stability and extreme ease of operation make it a great saver of time in both laboratory and production work.

–hp– Vacuum Tube Voltmeter has a voltage range from .03 volts to 300 volts. The response of the meter is constant from 10 c.p.s. to 1,000,000 c.p.s. Measurements with this instrument are particularly accurate because the indication is proportional to the average value of the full wave . . . thus waveform errors are reduced.

WRITE FOR COMPLETE DETAILS AND TECHNICAL DATA

You'll profit many ways by investigating the outstanding merit of –hp– Laboratory instruments. There's no obligation, of course.

HEWLETT PACKARD COMPANY

480 Page Mill Road **Palo Alto, California, U.S.A.**

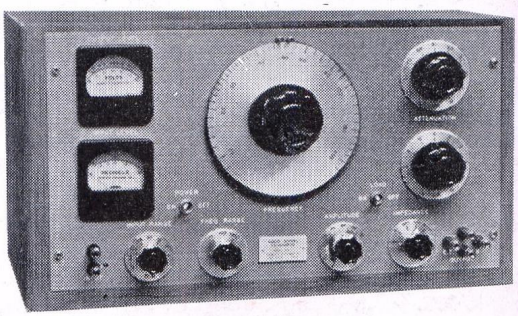

No. 205 AG Audio Signal Generator — Combines a Resistance tuned oscillator having 5 watts output and less than 1% distortion, plus Output meter, Input meter, Attenuator and an impedance matching system . . . all in a single unit.

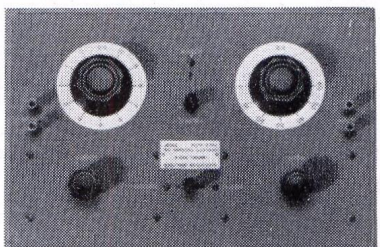

Model 320 Series Distortion Analyzers — For studying and measuring harmonic distortion in AF apparatus. Shows character of distortion being measured. 320A for measuring at 400 c.p.s. or 5000 c.p.s. 320B for measuring 50, 100, 400, 1000, 5000 and 7500 c.p.s.

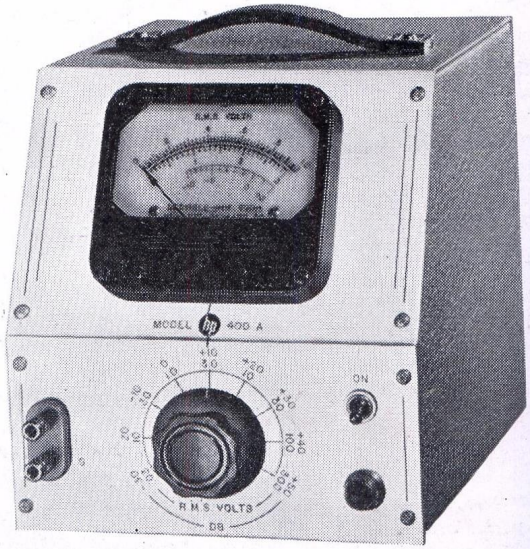

Model 400A Vacuum Tube Voltmeter — See brief description at left

Let CLAROSTAT Solve YOUR RESISTANCE PROBLEM

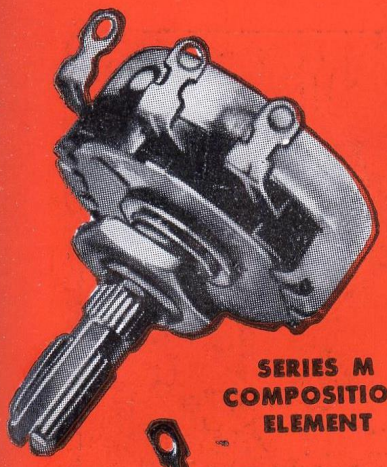

SERIES M COMPOSITION ELEMENT

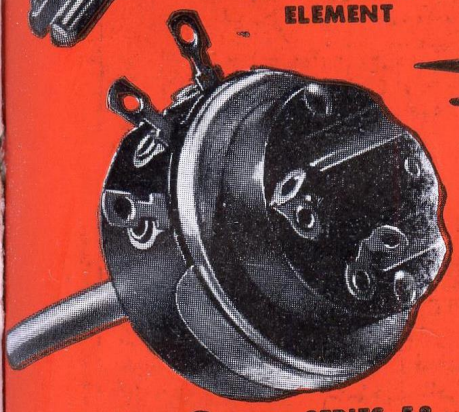

SERIES 58 WIRE-WOUND



FLAT-TYPE GREENOHM

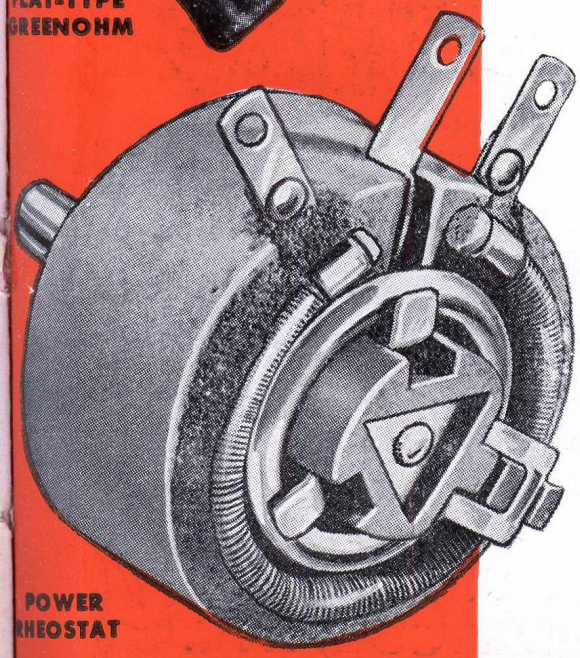

POWER RHEOSTAT

★ Yes indeed, it pays to follow the example of your Uncle Sam, the communication companies, leading equipment builders and others who must know what's what in components: Let Clarostat solve your resistance problem!

Clarostat has the necessary choice of standard types to meet every "ham" need. That's vital. No makeshifts, here. Then Clarostat controls and resistors have the reputation for performance and life. Can't overlook that fact. Lastly, Clarostat standard types are mass-produced to meet popular demand. That's why they're easy on your pocketbook. For instance:

Controls . . .

Midget composition-element Type M controls are the very last word in this type. Ad-A-Switch feature. Noise positively minimized. High degree of immunity to humidity and climatic conditions. Stable resistance values over longest service life. 1000 ohms to 5 megohms. Choice of tapers.

★ Clarostat wire-wound Series 58 controls are the same as supplied to leading broadcasters, networks, Government, etc. 1 to 100,000 ohms. Ad-A-Switch. Dual and triple types, too. ★ Clarostat Power Rheostats are brutes for punishment. 25-watt rating.

Resistors . . .

Greenohms are now found in most commercial "rigs," oscillographs, fine laboratory apparatus, etc. These inorganic, cement-coated power resistors are the toughest things available.

Conventional round type with sliding band contact, 10 to 200 watts, all standard resistance values. Also new flat type, particularly Series Z noninductive, for use in tight spots.

Attenuators . . .

For distortionless control of loudspeaker volume and similar critical applications, Clarostat offers Series CIA 25-watt and CIB 10-watt constant-impedance output attenuators, in 8, 15, 50, 200, 250 and 500 ohms. Also wide choice of L-pads, T-pads, Faders, Mixers, etc.

Ask Our Jobber . . .

He carries a line of standard Clarostat items for your convenience. He can get in a hurry the more special types you may require. Ask him for our latest literature —or write us direct. Be sure to try a Clarostat the next time! You'll be surprised.

CLAROSTAT Manufacturing Co. INC.

285-287 NORTH SIXTH STREET

BROOKLYN, NEW YORK, U.S.A.

• OFFICES IN PRINCIPAL CITIES •

¡Queridos Señores!

"THE RADIO AMATEUR'S HANDBOOK" se puede ahora conseguir en lengua española traducido por la Revista Telegráfica de Buenos Aires, Argentina, reconocida como la más antigua establecida y la más importante publicación de literatura de Radio en Sudamérica.

El "Handbook" (libro manual) está reconocido como el libro modelo en su clase. El por tanto tiempo esperado y sugestionado libro manual (Handbook) estamos seguros que su edición en español encontrará una acogidà extraordinaria. Ha sido cuidadosa y escrupulosamente traducido. Ha sido impreso en una imprenta que está reconocida como la mejor de Sudamérica.

Nosotros estamos orgullosos del hecho que la Revista Telegráfica haya producido este trabajo y estamos seguros al mismo tiempo que es una contribución notable para la literatura técnica en la lengua española.

Se pueden conseguir ejemplares en "The American Radio Relay League, West Hartford, Connecticut, U. S. A." a $1.50 cada ejemplar, franco, o si es más conveniente directamente de la Revista Telegráfica, Perú 165, Buenos Aires, Argentina, a seis pesos, en moneda argentina.

AMERICAN RADIO RELAY LEAGUE, INC.

WEST HARTFORD, CONN., U. S. A.

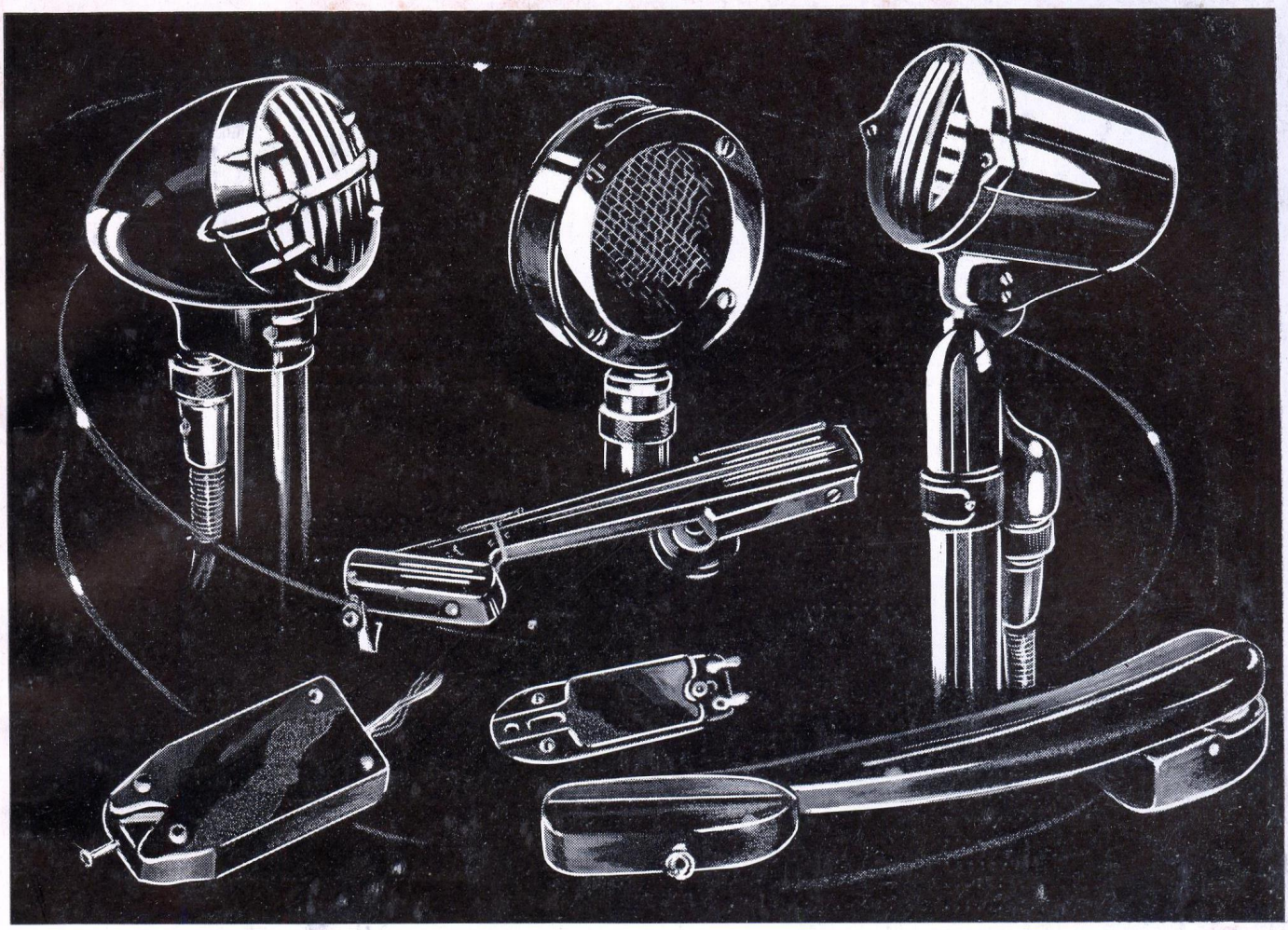

MEETING THE GREAT "AMATEUR" DEMAND

While serving every field, including professional and commercial demands, Astatic has never forgotten the amateur and many of its finest products are designed for his particular use. This is due, in part, to the fact that what is now The Astatic Corporation, known the world over as pioneer manufacturers of quality crystal microphones and pickups, had its humble beginning as a small but enthusiastic group of radio amateurs. We have enjoyed this friendship and the confidence that has come from the long and satisfactory service of Astatic Crystal Products.

When in need of crystal microphones, pickups, cartridges, recording heads and accessories, see your Radio Parts Jobber or write for Astatic's complete catalog.

ASTATIC

THE ASTATIC CORPORATION

YOUNGSTOWN, OHIO

Licensed Under Brush Development Co. Patents

In Canada:
Canadian Astatic Ltd.
Toronto, Ontario

FOR THOSE WHO WANT THE BEST

HYTRON OFFERS GREATER VALUE AND GREATER EFFICIENCY IN ITS TRIODES U.H.F. TRIODES AND R.F. BEAM TETRODES

HY75 $3.95

Filament	★6.3 volts @ 2.5 amps
Plate dissipation (max.)	15 watts
Plate	450 max. volts and 100 max. ma.

Nominal Output	Modulated	Unmodulated
56 megacycles	24	33 watts
112 megacycles	16	19 watts
224 megacycles	12	15 watts

HY63 $2.50 HY67 $7.75

	HY63	HY67
Filament potential	★1.25 or 2.5 v.	★6.3 or 12.6 v.
Filament current	0.22 or 0.11 a.	4 or 2 a.
Plate potential (max.)	200 v.	1250 v.
Plate current (max.)	20 ma.	175 ma.
Plate dissipation (max.)	3 w.	65 w.
Class C output	3 w.	152 w.



HY615 — HY114B

HY114B $2.25 HY615 $2.25

	HY114B	HY615
Filament potential	★1.25 v.	6.3 v.
Filament current	0.145 a.	0.17 a.
Plate potential (max.)	180 v.	300 v.
Plate current (max.)	15 ma.	20 ma.
Plate dissipation (max.)	2 w.	3.5 w.
Class C output	2 w.	4.5 w.

HY65 $3.00 HY69 $3.95

	HY65	HY69
Filament potential	★6.3 v.	★6.3 v.
Filament current	0.8 a.	1.6 a.
Plate potential (max.)	450 v.	600 v.
Plate current (max.)	63 ma.	100 ma.
Plate dissipation (max.)	15 w.	40 w.
Class C output	19 w.	42 w.



HY67



HY65

HY30Z $2.75 HY31Z $3.50

	HY30Z	HY31Z
Filament potential	★6.3 v.	★6.3 v.
Filament current	2.25 a.	2.5 a.
Plate potential (max.)	850 v.	500 v.
Plate current (max.)	90 ma.	150 ma.
Plate dissipation (max.)	30 w.	30 w.
Class C output	58 w.	56 w.
Class B audio output	110 w.	51 w.



HY75

HY60 $2.75 HY61/807 $3.50

	HY60	HY61/807
Filament potential	6.3 v.	6.3 v.
Filament current	0.5 a.	0.9 a.
Plate potential (max.)	425 v.	600 v.
Plate current (max.)	60 ma.	100 ma.
Plate dissipation (max.)	15 w.	25 w.
Class C output	16 w.	40 w.



HY30Z

HY40 $3.75 HY40Z $3.75

	HY40	HY40Z
Filament potential	7.5 v.	7.5 v.
Filament current	2.25 a.	2.5 a.
Amp. factor	25	80
Plate dissipation (max.)	40 w.	40 w.
Plate	1000 max. v. and 125 max. ma.	
Class C output	94 w.	
Class B output (2 tubes)	185 w.	

HY866 Jr. $1.05 866A/866 $1.50

	HY866 Jr.	866A/866
Filament potential	2.5 v.	2.5 v.
Filament current	2.5 a.	5.0 a.
Peak inverse potential	5000 v.	10000 v.
Peak plate current	500 ma.	1000 ma.
Max. D.C. output pot.	1575 v.	3165 v.
Max. D.C. Cur. (2 tubes)	250 ma.	500 ma.



HY69



HY31Z

HY51A HY51B HY51Z $4.75

	HY51A, Z	HY51B
Filament potential	7.5 v.	10 v.
Filament current	3.5 a.	2.25 a.
Amp. factor	25–85	25
Plate dissipation (max.)	65 w.	65 w.
Plate	1000 max. v. and 175 max. ma.	
Class C output	131 w.	
Class B output (2 tubes)	285 w.	



866 Jr.

6V6GTX $1.05 6L6GX $1.25

	6V6GTX	6L6G
Filament potential	6.3 v.	6.3
Filament current	0.5 a.	0.9 a.
Plate potential (max.)	300 v.	500 v.
Plate current (max.)	60 ma.	90 ma.
Plate dissipation (max.)	15 w.	21 w.
Class C output	12 w.	30 w.



HY51Z

HY24 $1.50 801A/801 $2.50

	HY24	801A
Filament potential	★2.0 v.	7.5 v.
Filament current	0.13 a.	1.25 a.
Plate potential (max.)	180 v.	600 v.
Plate current (max.)	20 ma.	70 ma.
Plate dissipation (max.)	2.0 w.	20 w.
Class C output	2.7 w.	30 w.

All ratings are for continuous-duty service (CCS).

CERAMIC-BASE BANTAMS

6A8GTX	$0.95	6K8GTX	$1.30
6J5GTX	0.95	6SA7GTX	1.05
6J7GTX	0.95	6SJ7GTX	1.05
6K7GTX	0.95	6SK7GTX	1.05

Use specially-selected Hytron ceramic-based GTX tubes for low-loss reception and transmission.



GTX

★Instant-heating filament

HYTRONIC LABS.

23 New Darby St., Salem, Mass.

HYTRON RADIO TUBES

A DIVISION OF HYTRON CORP.

Manufacturers of Radio Tubes Since 1921



Yesterday, "SPECIAL", "STANDARD" today

Stack-mounting porcelain cased mica capacitors for various transmitting applications — grid, plate-blocking, coupling, tank, by-passing, etc. In five different sizes. Wide choice of voltages and capacities.

Bakelite-case mica capacitors. Precision-built mica sections, vacuum-impregnated and surrounded by low-loss filler, in one-piece bakelite cases. Standard brown or low-loss (yellow) bakelite. Also a still wider choice of molded-in-bakelite mica, sulphur-filled mica, metal-case mica, etc.

Oil-filled capacitors in widest range of can designs, terminals, mountings. High-voltage capacitors up to 7500 v.

Handy plug-in electrolytic and paper section capacitors for ready checking and replacement in continuous-service equipment. Prong bases fit into standard octal socket (electrolytic) or UX socket (paper).

Mica padder units adjusted in regular production to as close as 1%. Exceptionally stable characteristics.

These and other types assure you of the right type capacitor for your every need.

As its practical contribution to the furtherance of the amateur radio art in these critical times, AEROVOX has made available to "hams" its communications-type transmitting capacitors, quite in addition to its regular items. Thus you can now use in your "rigs" those types which heretofore were confined to Government and commercial communication equipment, without undue strain on your pocketbook.

Ask Your Jobber . . .

He'll gladly tell you more about Aerovox communications-type transmitting capacitors, as well as the regular Aerovox line. Ask him for a copy of the latest radio catalog. Also ask for a FREE subscription to the monthly Aerovox Research Worker. Or write us direct.

AEROVOX

CORPORATION

NEW BEDFORD, MASS.

IN CANADA: AEROVOX CANADA, Limited

Individually-tested Condensers

LEARN CODE *the way you will use it—* BY HEARING IT

G. L. AUTOMATIC SENDERS will— Teach You Code—Speed-up Your Receiving— Send Your Messages

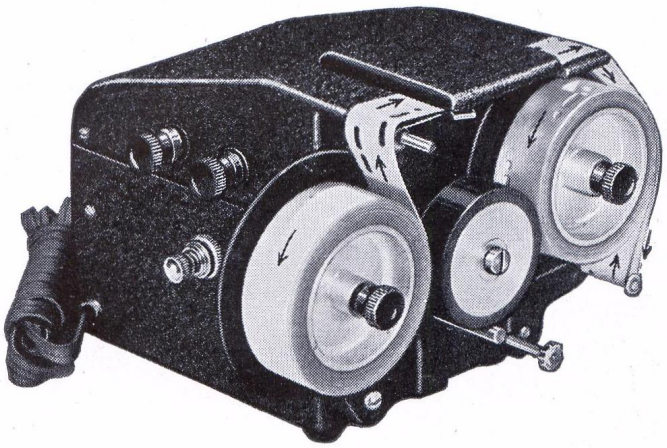

Type S—$17.50

Sends from 4 to 40 words per minute. Higher speeds if desired. Slow enough for the beginner. Fast enough to speed-up the professional or the "Ham." Multiple brush type contacts — positive at all speeds — no misses. Silent induction type motor. Motors other than standard voltage and frequency available at slight additional cost. Only 5½" x 4½" x 6". Weighs only 4 lbs. Aluminum case, black instrument finished. All exposed parts cadmium plated. Complete with 10 rolls of double-perforated lesson tape of carefully arranged and selected material for speediest results.

Type J—$12.50

Double purpose instrument — code teacher and automatic sender. Sends from 6 to 60 words per minute. Multiple brush type contacts — positive at all speeds. Silent induction type motor. Motors other than standard voltage and frequency available at slight additional cost. Built-in tape perforator. Cut your own code practice and reception speed-up tapes. Cut your own message tapes for calling stations or repeating messages. Repeats calls or messages indefinitely. Length of message practically unlimited. Complete with ready cut practice tape and 5 rolls of blank tape.

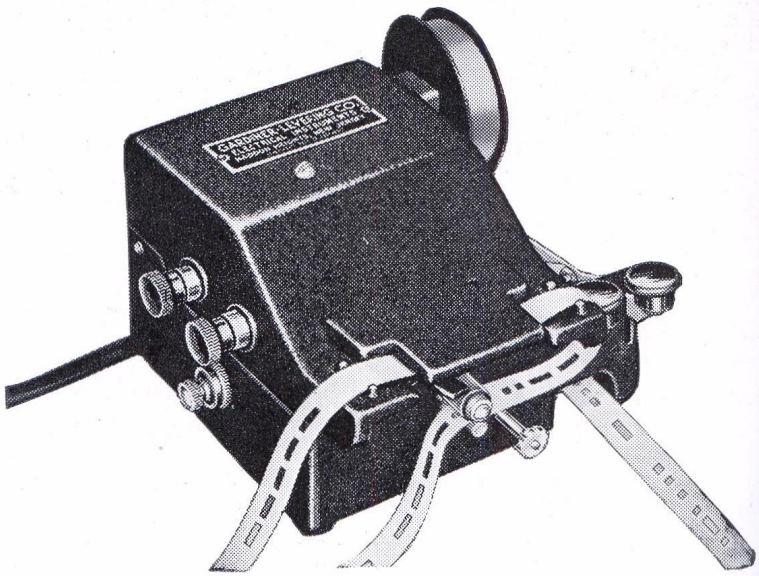



High Speed Relays

Completely encased in black satin finished bakelite. Sealed against moisture. Will follow accurately at greater than 7000 contacts per minute. Extremely quiet, small in size, pin-type base. Can be used in any position. Available in 6, 25, 50, 100 and 150 Volts.



If your dealer cannot supply you, write us

GARDINER-LEVERING CO.

Box 83, Haddon Heights New Jersey, U. S. A.



In keeping with its policy of providing all services within its power, The American Radio Relay League makes available to amateurs and would-be amateurs literature properly prepared to present in the best form all available information pertaining to amateur radio. The fact that its offices are the national and international headquarters of radio amateurs, makes League publications authoritative, complete, up-to-the-minute; written from a thoroughly practical amateur's point-of-view. These publications are frequently revised and augmented to keep abreast of the fast-changing field. All are printed in the familiar **QST** format which permits thorough but economical presentation of the information. Various invaluable printed forms, designed to facilitate compliance with the rules of good amateur practice, are available at moderate cost. We maintain to the best of our ability a stock of back copies of **QST** which are available at the original single-copy price. Most of the publications and supplies described in the following pages are handled by your dealer for your convenience.

THE AMERICAN RADIO RELAY LEAGUE, INC.

WEST HARTFORD, CONNECTICUT



For twenty-seven years (and thereby the oldest American radio magazine) ***QST*** has been the "bible" of Amateur Radio.

QST faithfully and adequately reports each month the rapid development which makes Amateur Radio so intriguing. Edited in the sole interests of the members of The American Radio Relay League, who are its owners, ***QST*** treats of equipment and practices and construction and design, and the romance which is part of Amateur Radio, in a direct and analytical style which has made ***QST*** famous all over the world. It is essential to the well-being of any radio amateur. ***QST*** goes to every member of The American Radio Relay League and membership costs $2.50 per year in the United States and Possessions. All other countries $3.00 per year. Elsewhere in this book will be found an application blank for A.R.R.L. membership.

The OFFICIAL MAGAZINE *of the* AMERICAN RADIO RELAY LEAGUE

QST

QST

Yearly Binders

Those who take pride in the appearance of their lay-out and wish to keep their reference file of *QST*'s in a presentable manner, appreciate the *QST* binder. It is stiff-covered, finished in beautiful and practical maroon fabrikoid. Cleverly designed to take each issue as received and hold it firmly without mutilation, it permits removal of any desired issue without disturbing the rest of the file. It accommodates 12 copies of *QST* and the yearly index. Opens flat at any page of any issue.

With each Binder is furnished a sheet of gold and black gummed labels for years 1922 through 1943. The proper one can be cut from the sheet and pasted in the space provided for it on the back of the binder.

Back Copies

The back copies of *QST* contain the record of development of modern amateur technique. They are invaluable as technical references. Our supply of most issues is already exhausted, but many since 1925 are still available.

A file of several years of QST, kept in order in binders, is a most valuable reference library for any Radio Amateur.

1934 to 1940 copies, inclusive, complete, $2.50 per yearly set.

1925 to 1933 copies, inclusive, incomplete. Available copies of these years furnished upon application.

All single copies, 25c each. Foreign add 50c for each twelve copies ordered.



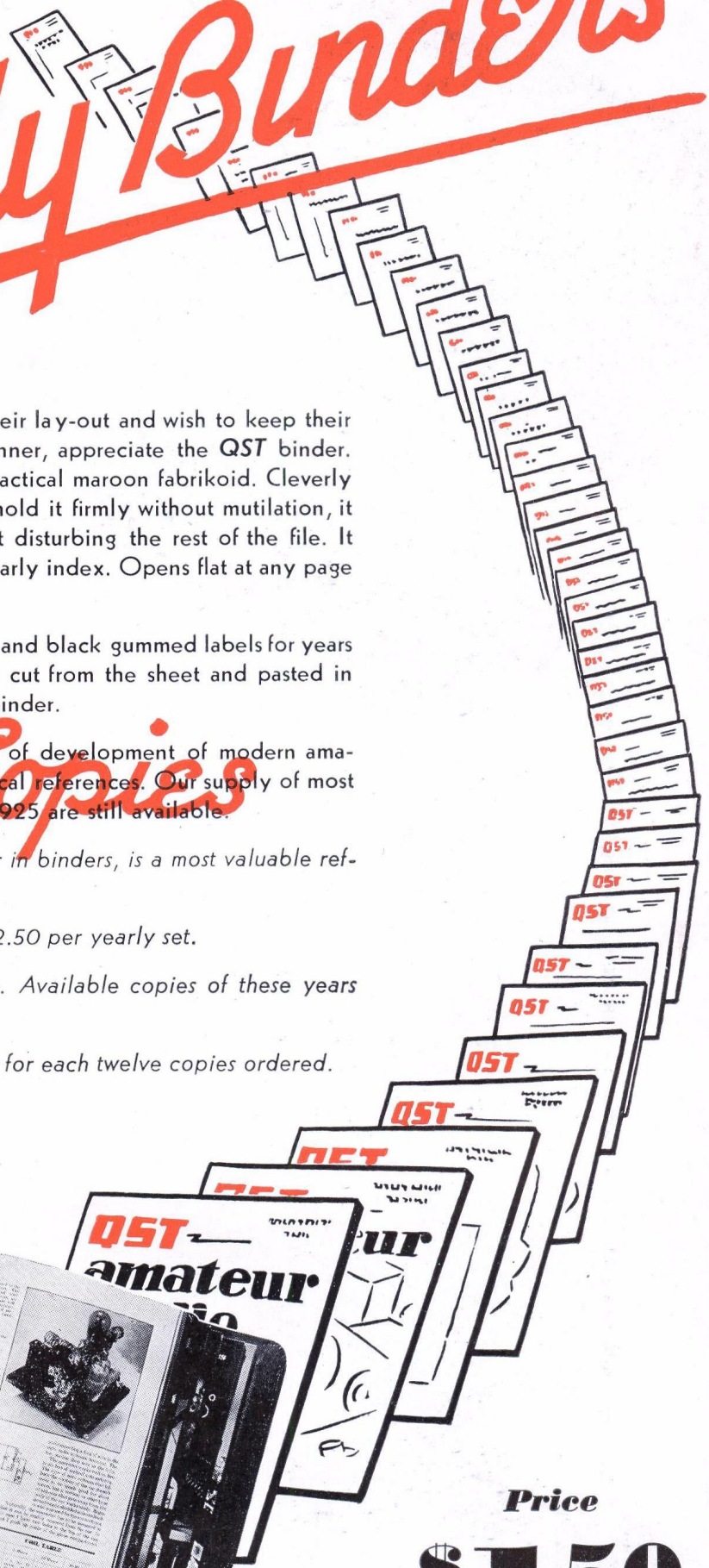

Price

$1.50

POSTPAID

Available only in United States and Possessions

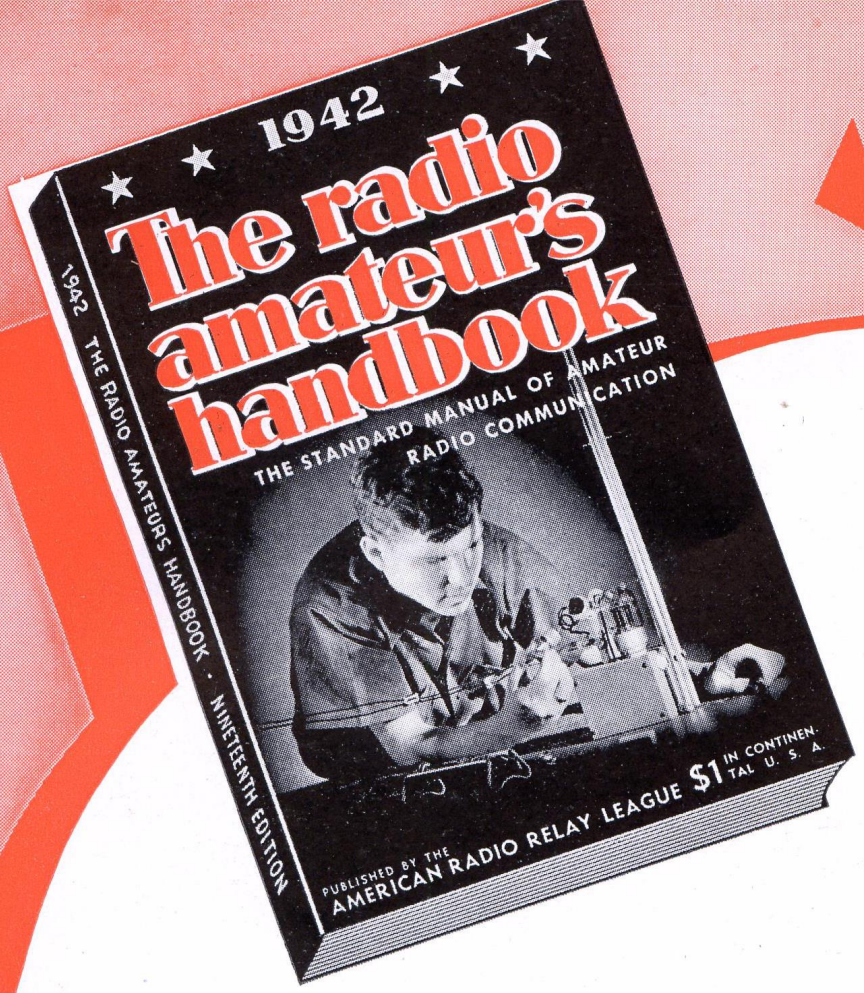

$1 POSTPAID
$1.50 OUTSIDE CONTINENTAL U. S. A.

BUCKRAM BOUND
$2.50 POSTPAID

SPANISH EDITION
$1.50 POSTPAID

The Handbook tells the things which are needed for a comprehensive understanding of Amateur Radio. From the story of how Amateur Radio started through an outline of its wide scope of the present — from suggestions on how to learn the code through explanations of traffic-handling procedure and good operating practices — from electrical and radio fundamentals through the design, construction, and operation of amateur equipment — this book covers the subject thoroughly. It includes the latest and the best information on everything in Amateur Radio.

Universally recognized as the standard elementary guide for the prospective amateur, How to Become a Radio Amateur, features equipment which, although simple in construction, conforms in every detail to present practices. The apparatus is of a thoroughly practical type capable of giving long and satisfactory service — while at the same time it can be built at a minimum of expense. The design is such that a high degree of flexibility is secured, making the various units fit into the more elaborate station layouts which inevitably result as the amateur progresses. Complete operating instructions and references to sources of detailed information on licensing procedure are given, as well as a highly absorbing narrative account of just what amateur radio is and does.

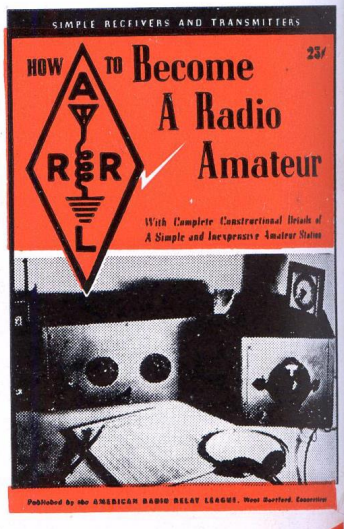

25c
POSTPAID
ANYWHERE

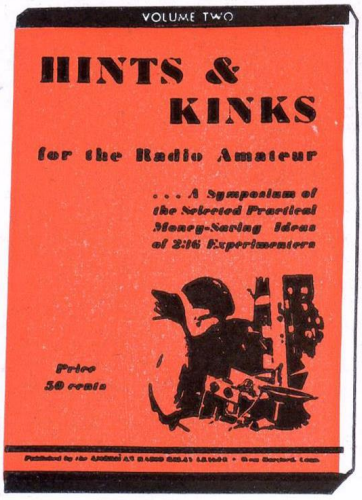

Amateurs are noted for their ingenuity in overcoming by clever means the minor and major obstacles they meet in their pursuit of their chosen hobby. An amateur must be resourceful and a good tinkerer. He must be able to make a small amount of money do a great deal for him. He must frequently be able to utilize the contents of the junk box rather than buy new equipment. Hints and Kinks is a compilation of hundreds of good ideas which amateurs have found helpful. It will return its cost many times in money savings — and it will save hours of time.

50c

POSTPAID ANYWHERE

A comprehensive manual of amateur antenna design and construction, by the headquarters staff of the American Radio Relay League. Eighteen chapters, profusely illustrated. Both the theory and the practice of all types of antennas used by the amateur, from simple doublets to multi-element rotaries, including long wires, rhomboids, vees, phased systems, u.h.f. systems, etc. Feed systems and their adjustment. Construction of masts, lines and rotating mechanisms. The most comprehensive and reliable information ever published on the subject.

50c

POSTPAID ANYWHERE

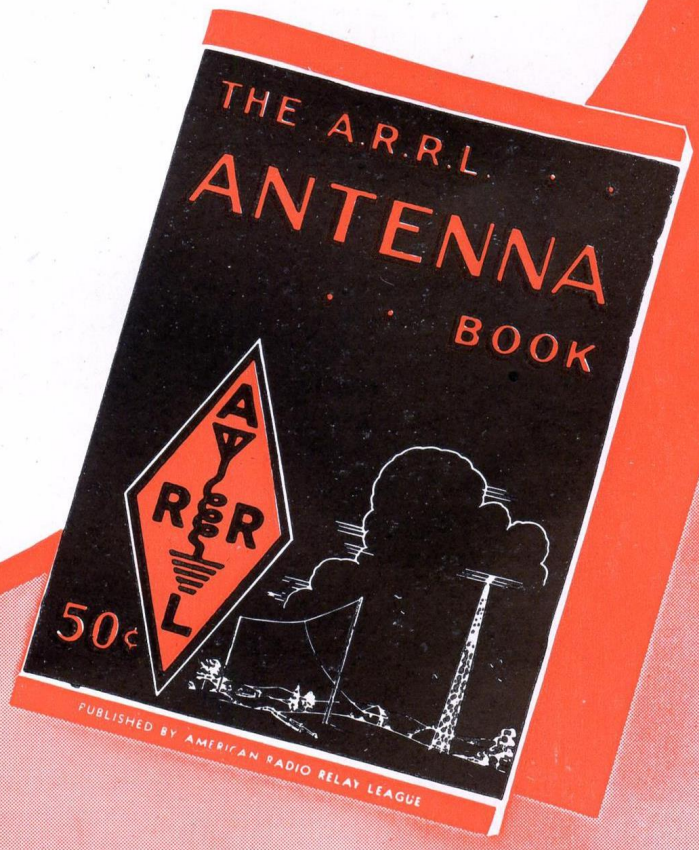

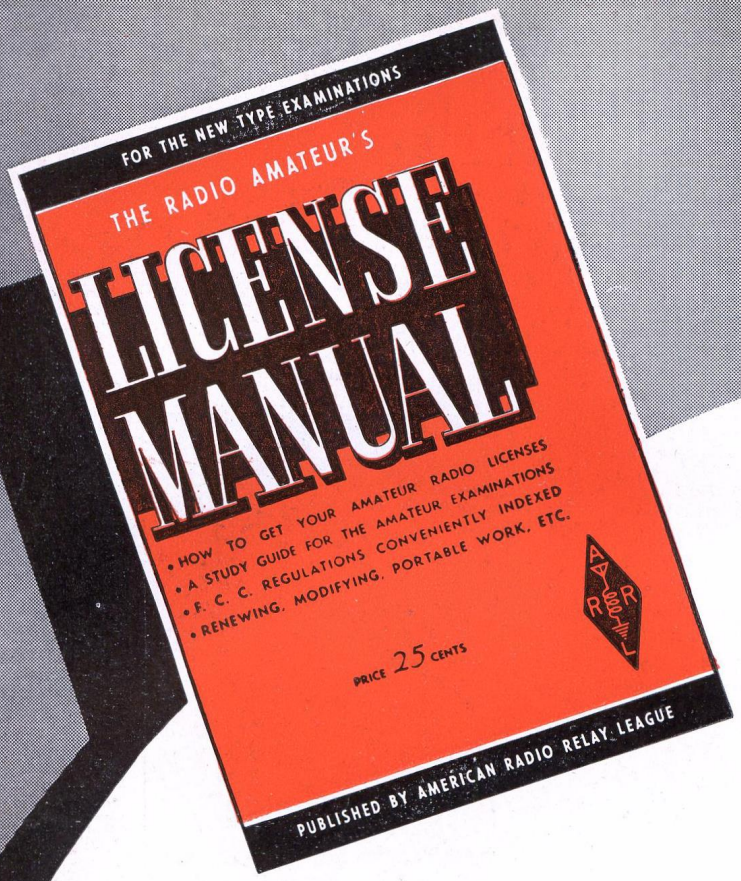

25¢

postpaid anywhere

Before you can operate an amateur transmitter, you must have a government license and an officially assigned call. These cost nothing — but you must be able to pass the examination. The examinations are based on the multiple-choice type of questions. The "License Manual" has been written to make it as easy as possible for the individual to acquire the necessary knowledge to pass the examination with flying colors. Whether you are going up for your Class C, B or your Class A ticket, "The License Manual" will provide the most direct path to getting that ticket. If you are one of the thousands who always wants a "License Manual" around the shack for ready reference for amateur regulations, it will please you to know that the regulations are very thoroughly indexed.

An introduction into Amateur Radio-telephony. Written for the man who has a class C or class B license. A companion book to "How to Become a Radio Amateur." Contains simple description of the process of modulation and principles of good design for 'phone. Description of inexpensive low power transmitter and modulator, with complete operating instructions plus some antenna dope of particular interest in 160- and 10-meter operation. It tells what a new or inexperienced ham should know before attempting to use 'phone.

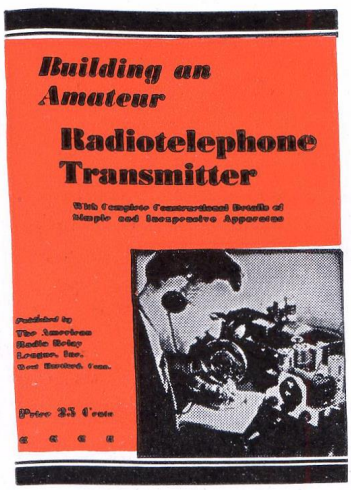

25¢

postpaid anywhere

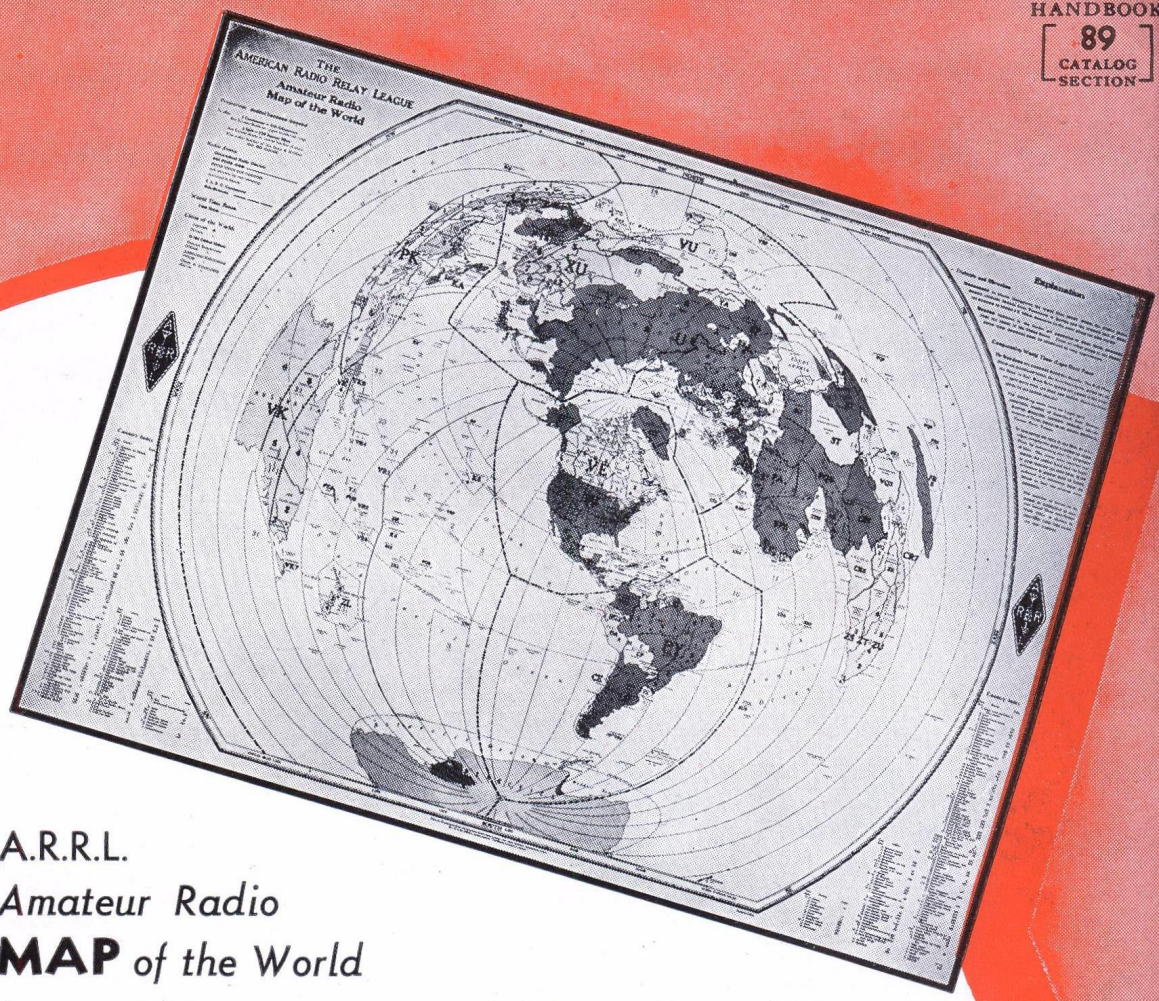

A.R.R.L. *Amateur Radio* **MAP** *of the World*

A map entirely new in conception and design, contains every bit of information useful to the radio amateur. A special type of projection made by Rand, McNally to A.R.R.L. specifications. It gives great circle distance measurements in miles or kilometers within an accuracy of 2%. Shows all principal cities of the world; local time zones and Greenwich; WAC divisions; 230 countries, indexed; 180 prefixes, districts and subdivisions, where used; and U. S. examining points. Large enough to be usable, printed in six colors on heavy map paper, 30 x 40 inches.

$1.25 POSTPAID

TWO HUNDRED METERS AND DOWN

The Story of Amateur Radio

by CLINTON B. DESOTO

A detailed, accurate presentation in full book length of all the elements that have served to develop the most unique institution of its kind in the history of the world. A book of history but not a history-book, TWO HUNDRED METERS AND DOWN: The Story of Amateur Radio tells in spirited, dramatic fashion the entire chain of significant events in the development of the art.

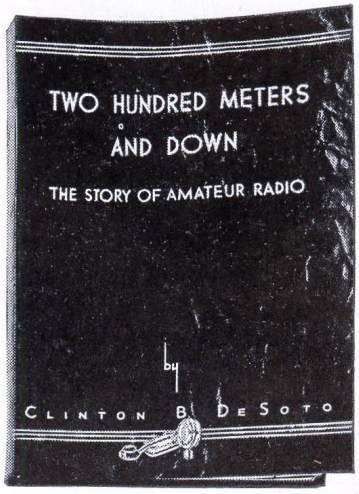

Approximately 200 pages, 90,000 words, with durable imitation leather red paper cover

$1.00 POSTPAID

Deluxe edition bound in blue cloth

$2.00 POSTPAID

STATION OPERATING Supp

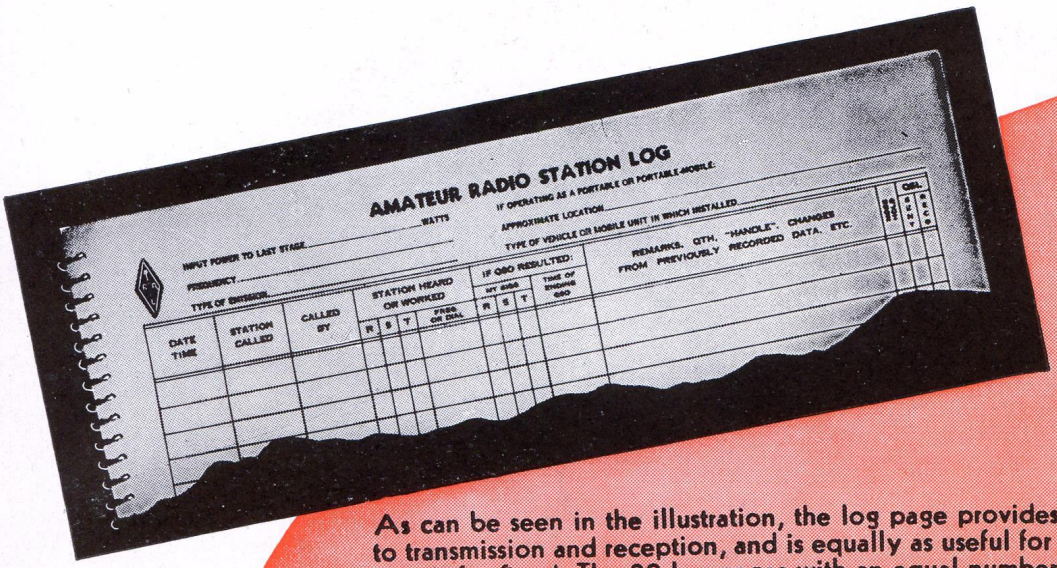

LOG BOOK

As can be seen in the illustration, the log page provides space for all facts pertaining to transmission and reception, and is equally as useful for portable or mobile operation as it is for fixed. The 38 log pages with an equal number of blank pages for notes, six pages of general log information (prefixes, etc.) and a sheet of graph paper are spiral bound, permitting the book to be folded back flat at any page, requiring only the page size of 8½ x 11 on the operating table. In addition, a number sheet, with A.R.R.L. Numbered Texts printed on back, for traffic handlers, is included with each book.

35c per book or 3 books for **$1**

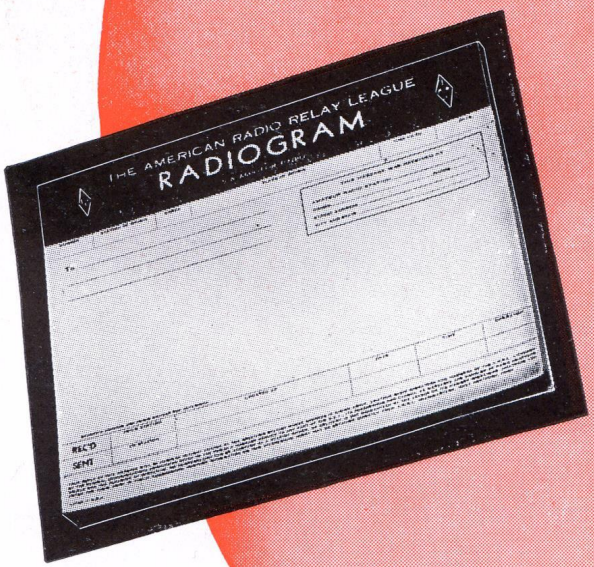

OFFICIAL RADIOGRAM FORMS

The radiogram blank is designed to comply with the proper order of transmission. All blocks for fill-in are properly spaced for use in typewriter. It has a strikingly-new heading that you will like. Radiogram blanks, 8½ x 7¼, lithographed in green ink, and padded 100 blanks to the pad, 20c per pad, postpaid.

MESSAGE DELIVERY CARDS

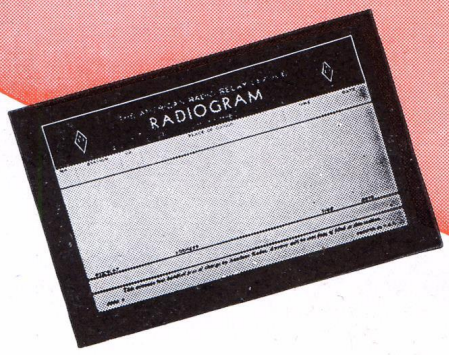

Radiogram delivery cards embody the same design as the radiogram blank and are available in two styles — on stamped government postcard, 2c each; unstamped, 1c each.

The operating supplies shown on this page have been designed by the A.R.R.L. Communications Department.

plies

MEMBERSHIP

STATIONERY

Members' stationery is standard 8½ x 11 bond paper which every member should be proud to use for his radio correspondence. Lithographed on 8½ x 11 heavy bond paper.

100 Sheets, **50c** *250 Sheets,* **$1.00**
500 Sheets, **$1.75**
POSTPAID



In the January, 1920 issue of *QST* there appeared an editorial requesting suggestions for the design of an A.R.R.L. emblem — a device whereby every amateur could know his brother amateur when they met, an insignia he could wear proudly wherever he went. There was need for such a device. The post-war boom of amateur radio brought thousands of new amateurs on the air, many of whom were neighbors but did not know each other. In the July, 1920 issue the design was announced — the familiar diamond that greets you everywhere in Ham Radio — adopted by the Board of Directors at its annual meeting. It met with universal acceptance and use. For years it has been the unchallenged emblem of amateur radio, found wherever amateurs gathered, a symbol of the traditional greatness of that which we call Amateur Spirit — treasured, revered, idealized.

THE LEAGUE EMBLEM, with both gold border and lettering, and with black enamel background, is available in either pin (with safety clasp) or screw-back button type.

In addition, there are special colors for Communications Department appointees.

- Red enameled background for the SCM.
- Blue enameled background for the ORS or OPS.

(Red available in pin type only. Blue may be had in either pin or button style.)

THE EMBLEM CUT: A mounted printing electrotype, 5/8" high, for use by members on amateur printed matter, letterheads, cards, etc.

50c EACH POSTPAID



Stationery and Emblems are available only to A.R.R.L. Members.

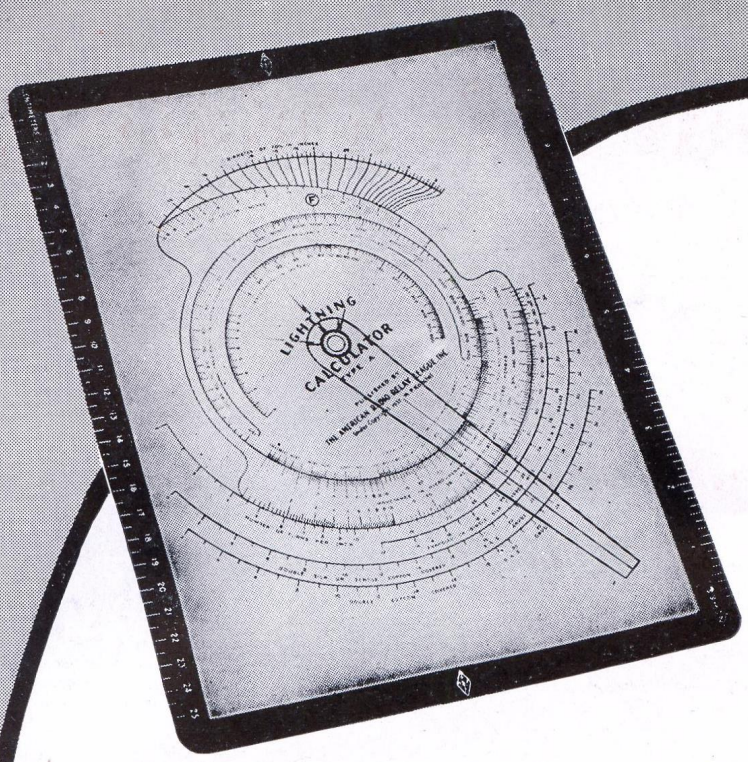

Aware of the practical bent of the average amateur and knowing of his limited time, the League, under license of the designer, W. P. Koechel, has made available several calculators to obviate the tedious and sometimes difficult mathematical work involved in the design and construction of radio equipment. The various lightning calculators are ingenious devices for rapid, certain and simple solution of the various mathematical problems which arise in all kinds of radio and allied work. They make it possible to read direct answers without struggling with formulas and computations. They are tremendous time-savers for amateurs, engineers, servicemen and experimenters. Their accuracy is more than adequate for the solution of practical problems, and is well within the limits of measurement by ordinary means. Each calculator has on its reverse side detailed instructions for its use; the greatest mathematical ability required is that of dividing or multiplying simple numbers. All calculators are printed in several colors and are wrapped in cellophane. You will find lightning calculators the most useful gadgets you ever owned.

RADIO CALCULATOR
Type A

This calculator is useful for the problems that confront the amateur every time he builds a new rig or rebuilds an old one or winds a coil or designs a circuit. It has two scales for physical dimensions of coils from one-half inch to five and one-half inches in diameter and from one-quarter to ten inches in length; a frequency scale from 400 kilocycles through 150 megacycles; a wavelength scale from two to 600 meters; a capacity scale from 3 to 1,000 micro-microfarads; two inductance scales with a range of from one microhenry through 1,500; a turns-per-inch scale to cover enameled or single silk covered wire from 12 to 35 gauge, double silk or cotton covered from 0 to 36 and double cotton covered from 2 to 36. Using these scales in the simple manner outlined in the instructions on the back of the calculator, it is possible to solve problems involving frequency in kilocycles, wavelength in meters, inductance in microhenrys and capacity in microfarads, for practically all problems that the amateur will have in designing — from high-powered transmitters down to simple receivers. Gives the direct reading answers for these problems with accuracy well within the tolerances of practical construction.

$1.00 POSTPAID

OHM'S LAW CALCULATOR
Type B

This calculator has four scales:

A power scale from 10 microwatts through 10 kilowatts.

A resistance scale from .01 ohms through 100 megohms.

A current scale from 1 microampere through 100 amperes.

A voltage scale from 10 microvolts through 10 kilovolts.

With this concentrated collection of scale, calculations may be made involving voltage, current, and resistance, and can be made with a single setting of a dial. The power or voltage or current or resistance in any circuit can be found easily if any two are known. This is a newly-designed Type B Calculator which is more accurate and simpler to use than the justly-famous original model. It will be found useful for many calculations which must be made frequently but which are often confusing if done by ordinary methods. All answers will be accurate within the tolerances of commercial equipment.

$1.00 POSTPAID

LIGHTNING CALCULATORS

The Amateur's BOOKSHELF

A balanced selection of good technical books, additional to the ARRL publications, should be on every amateur's bookshelf. We have arranged, for the convenience of our readers, to handle through the ARRL Book Department those works which we believe to be most useful. Make your selection from the following, add to it from time to time and acquire the habit of study for improvement. ***Prices quoted include postage.*** Please remit with order.

Radio Theory and Engineering

RADIO ENGINEERING, *by F. E. Terman.* A comprehensive treatment covering all phases of radio communication. An all-around book for students and engineers, it is a recognized authority in its field. 813 pages, 475 illustrations. 2nd edition, 1937.....**$5.50**

FUNDAMENTALS OF RADIO, *by F. E. Terman.* An elementary version of the author's "Radio Engineering," with simplified treatment and intended for readers of limited mathematical ability. 458 pages, 278 illustrations. 1938.....**$3.75**

PRINCIPLES OF RADIO, *by Keith Henney.* The subjects range from the fundamentals of electricity to the modern concepts of modulation and detection. 495 pp., 311 illustrations. 3rd edition, 1938.....**$3.50**

FUNDAMENTALS OF RADIO, *by R. R. Ramsey.* Long a favorite with amateurs and experimenters. 426 pages, 418 figures, 380 problems. Second edition, 1935.....**$3.50**

ELEMENTS OF RADIO COMMUNICATION, *by J. H. Morecroft.* By the author of the well-known "Principles." Simple algebra is sufficient. An excellent book for the "first-year" student. 286 pages, 170 illustrations. Second edition, 1934.....**$3.00**

COMMUNICATION ENGINEERING, *by W. L. Everitt.* Complete treatment of network theory, including mathematical analysis of radio circuits and tube operation. 727 pages, 411 illustrations. 1937.....**$5.00**

THEORY AND APPLICATION OF ELECTRON TUBES, *by H. J. Reich.* A comprehensive treatment of the theory, characteristics and applications of electron tubes and their circuits, with many data not elsewhere available. 670 pages, 512 illustrations. 1939. **$5.00**

RADIO ENGINEERING HANDBOOK, *Keith Henney, Editor.* An authoritative handbook for radio engineers, with technical data on all fields and aspects of radio contributed by a staff of 23 specialists. 945 pages, 837 illustrations. 1941.....**$5.00**

Radio Experiments and Measurements

MEASUREMENTS IN RADIO ENGINEERING, *by F. E. Terman.* A comprehensive engineering discussion of the measurement problems encountered in engineering practice with emphasis on basic principles. 400 pages, 208 illustrations. 1935.....**$4.00**

HIGH-FREQUENCY MEASUREMENTS, *by August Hund.* A thorough treatment, especially useful in advanced laboratory work. Includes a chapter on piezo-electric determinations. 491 pp., 373 illustrations. 1933. **$5.00**

THE CATHODE-RAY TUBE AT WORK, *by John F. Rider.* Cathode-ray tube theory, sweep circuits, a.c. wave patterns and description of commercial oscilloscope units including actual photographs of screen patterns. 322 pages, 444 illustrations.....**$3.00**

RADIO FREQUENCY ELECTRICAL MEASUREMENTS, *by H. A. Brown.* A laboratory course in r.f. measurements for communications students. Contains practical information on methods. 384 pages, 177 illustrations. 2nd edition, 1938.....**$4.00**

EXPERIMENTAL RADIO, *by R. R. Ramsey.* This is a laboratory manual, describing 132 experiments designed to bring out the principles of radio theory, instruments and measurements. 196 pages, 167 figures. Fourth edition, 1937.....**$2.75**

Commercial Equipment and Operating

RADIO OPERATING QUESTIONS AND ANSWERS, *by Nilson and Hornung.* Gives the answers to the paraphrased questions in the FCC study guide, covering all six elements of the commercial examinations. Completely modernized. 415 pages, 87 illustrations. 7th edition, 1940.....**$2.50**

RADIO OPERATOR'S MANUAL, *by the Radio Dept., General Electric Co.* Primarily a manual to qualify an applicant for the radiotelephone classes of license (including police), but also provides material of general interest to users of commercial radio equipment. 194 pages, 56 illustrations. 4th edition, 1939.....**$1.00**

PRACTICAL RADIO COMMUNICATION, *by Nilson and Hornung.* A treatment meeting the expanded scope of technical requirements in the various commercial fields. The first six chapters are devoted to principles, the remaining nine to broadcasting, police, aviation and marine communication. 754 pages, 435 illustrations. 1935.....**$5.00**

THE RADIO MANUAL, *by G. E. Sterling.* An excellent practical handbook, especially valuable to the commercial and broadcast operator, covering the principles, methods and apparatus of all phases of radio activity. Illustrated. 1120 pages, 1938.....**$6.00**

Miscellaneous

THE RADIO AMATEUR CALL BOOK. Lists all U. S. and foreign amateur radio stations. Quarterly.....**$1.25** (Foreign **$1.35**)

CALLING CQ—ADVENTURES OF SHORT-WAVE RADIO OPERATORS, *by Clinton B. DeSoto.* Stories of the friendships, adventures, exploits and heroism of hams the world over. The answer for the friends who ask, "What is amateur radio all about?" 291 pages. 1941.....**$2.00**

RADIO AS A CAREER, *by J. L. Hornung.* A comprehensive discussion of the opportunities to be found in the various radio fields and the relationship of the radio amateur to these fields. 212 pages. 1940.....**$1.50**

GETTING ACQUAINTED WITH RADIO, *by Alfred Morgan.* Gives the average person interested in radio the basic principles of the science. For the neophyte. 285 pages, 130 illustrations. 1940.....**$2.50**

AUDEL'S NEW RADIOMAN'S GUIDE, *by E. P. Anderson.* For one who wants to get a working knowledge of radio. Not an engineering text, but filled with useful information for the practicing radio man. 765 pages, 519 illustrations. 1940.....**$4.00**

SERVICING SUPERHETERODYNES, *by John F. Rider.* Theory and practice of superheterodynes, with adjustment and trouble-shooting data. 278 pages, 94 illustrations. **$1.00**

AERONAUTIC RADIO, *by Myron F. Eddy.* This book supplies the information needed by students, pilots, mechanics, operators and executives. Prepares for aviation radio license exams. 502 pages, 198 illustrations. 1939. **$4.50**

PRINCIPLES OF TELEVISION ENGINEERING, *by D. G. Fink.* Information on the fundamental processes of television reception and transmission, with design data and descriptions of modern equipment. Covers the television system from the camera to the viewing screen in the receiver. 541 pages, 313 illustrations. 1940.....**$5.00**

AMERICAN RADIO RELAY LEAGUE, INC., WEST HARTFORD, CONNECTICUT

To Manufacturers of Products Used in Short-Wave Radio Communication

THE RADIO AMATEUR'S HANDBOOK is the world's standard reference on the technique of short-wave radio communication. Now in its nineteenth annual edition, it is universally used by radio engineers as well as the thousands of amateurs and experimenters for whom it is published. Year after year, each succeeding edition has sold more widely than its predecessor, until the Handbook now has a world-wide annual distribution in excess of eighty thousand copies of its English and Spanish editions. To manufacturers whose integrity is established and whose products meet the approval of the American Radio Relay League technical staff, we offer use of space in the Handbook's Catalog-Advertising Section. Testimony to its effectiveness is the large volume of advertising which the Handbook carries each year. It is truly the standard guide for amateur, commercial and government buyers of short-wave radio equipment. Particularly valuable as a medium through which complete data on products can be made easily available to the whole radio engineering and experimenting field, it offers a surprisingly inexpensive method of producing and distributing a creditable catalog, accomplishes its production in the easiest possible manner, and provides adequate distribution and permanent availability impossible to attain by any other means. We solicit inquiries from qualified manufacturers who wish full data for their examination when catalog and advertising plans are under consideration.

ADVERTISING DEPARTMENT . . .

American Radio Relay League

WEST HARTFORD, CONNECTICUT

Index

PAGE

A Battery ... 42
AARS ... 12
A.C. ... 28–30
A.C.-D.C. Converters ... 336
A.C.-D.C. Power Supplies ... 152
ARL Check ... 433
AT-Cut Crystals ... 61
Abbreviations, International Standard ... 436–437
Abbreviations, Radio and Electrical ... 381
Absorption ... 157
Absorption Frequency Meters ... 349–350
Acorn Tubes ... 121
Adjacent-Channel Selectivity ... 112
Air-Gap Crystal Holder ... 61–62
Alignment, Receiver ... 137–138, 141–142, 367–368
Alternating Current ... 28–30
Alternating Current, Ohm's Law for ... 30–31
Alternating Current Spectrum ... 30
Amateur Bands ... 15–16
Amateur Operator and Station Licenses ... 20
Amateur Regulations ... 438–445
American Radio Relay League:
  Foundation ... 10
  Headquarters ... 13–14
  Hiram Percy Maxim Memorial ... 13–14
  Joining the League ... 14
  Organization ... 13, 435
Ammeters ... 28, 32, 358, 359
Ampere ... 23
Ampere Turns ... 25
Amplification Factor ... 43
Amplification, Vacuum Tube ... 43, 44–46
Amplifier Classifications ... 46–48
Amplifiers (*see* "Receivers," "Transmitters" and "Radiotelephony")
Amplitude Modulation ... 84
Anchor, Guy Wire ... 342–343
Angle, Amplifier Operating ... 71, 79–80
Angle of Radiation ... 158, 162, 164
Angular Velocity ... 29
Anode ... 23
Antenna Systems:
  Angle of Radiation ... 158, 162, 164
  Beam Antennas ... 184–194
  Bent Antennas ... 184
  Broadside Arrays ... 187, 188
  Coaxial Vertical Radiator ... 193–194
  Collinear Arrays ... 187–188
  Compact Antennas ... 183–184
  Conductor Size ... 163
  Construction ... 340
  "Corner" Reflector Antennas ... 194
  Coupling to Receiver ... 116
  Coupling to Transmitter ... 169–172
  Current Distribution ... 163, 179
  Directive Antennas ... 184–194
  Directivity ... 162
  Director ... 190
  Doublet ... 162
  Driven Elements ... 187
  Dummy Antennas ... 76
  End Effect ... 162
  End-Fire Arrays ... 187, 188–189
  Feed Systems:
    Balance to Ground ... 167
    Characteristic Impedance ... 167
    Concentric Lines ... 166, 176–177
    Current ... 166
    Delta Matching Transformer ... 177
    Harmonic Resonance ... 39
    Height ... 163–164
    Impedance ... 40, 167, 168
    Length ... 167–168, 189
    Losses ... 168–169
    Linear Transformers ... 168, 178–179
    Non-Resonant Lines ... 169, 175–179
    Open-Wire Line ... 166, 172
    "Q" Antenna ... 177–178
    Reactance ... 168
    Resistance ... 168
    Resonant Lines ... 169, 172–175
    Single-Wire Feed ... 166, 175

PAGE

  Standing-Wave Ratio ... 168
  Stub Matching ... 178–179
  Tuned Transmission Lines ... 172–175
  Twisted-Pair Line ... 166, 175–176
  Untuned Transmission Lines ... 171–179
  Voltage ... 166
Folded Dipole ... 194
Ground Effect ... 164–165
Grounded Antennas ... 193
Guys ... 342–343
Hertz Antenna ... 162
Impedance ... 162, 163, 164, 181
Installation ... 270–271
J Antenna ... 162
Length ... 162–163, 174–175, 179, 191, 193
Lightning Protection ... 343–344
Long-Wire Antennas ... 179–182, 184–186
Marconi (Grounded) Antennas ... 193
Masts ... 341–342
Measurements ... 370–371
Mobile ... 347
Multi-Band Antennas ... 182–183
Parasitic Elements ... 190–193
Patterns, Radiation ... 165
Phased Arrays ... 186–190
Polarization ... 156, 162, 164–165
Portable ... 339
Power Gain ... 162, 181
Radiation Characteristics ... 163
Radiation Resistance ... 40
Receiving ... 194–195
Reflection, Ground ... 163–164
Reflector ... 190
Rhombic or Diamond Antennas ... 185–186
Rotary-Beam Antennas ... 191, 344–346
Standing Waves ... 39
Transmission Lines ... 166–169
Tuners, Construction of ... 214–216, 218–219, 221–222, 226, 239–240, 257–258
Ultra-High Frequency ... 346
V Antennas ... 184–185
Voltage Distribution ... 163, 179
Anti-Nodes ... 39
Arc-Back ... 144
Army-Amateur Net ... 12
Arrays, Antenna ... 186–195
Atoms ... 21
Atmospheric Bending ... 160, 161
Attraction ... 22
Audio Frequencies ... 30
Audio Frequency Measurement ... 357
Audio Image ... 129
Audio Limiting ... 97, 134
Audio Oscillators ... 17–18, 368
Autodyne Reception ... 111
Automatic Volume Control ... 131–133
Auto-Transformer ... 33
Average Current Value ... 29

Back-Wave ... 106
Baffle Shield ... 37
B Battery ... 42
Balanced Transmission Line ... 167
Balancing Circuits, Meter ... 361
Band Changing ... 121
Band-Pass Filters ... 38
Band Spread ... 121–122
Band Width ... 112
Bands, Amateur ... 16–17
Batteries ... 24, 333–334
Battery Service Hours (Table) ... 334
Beam Antennas (*see* "Antenna Systems")
Beam Tubes ... 49
Beat Frequencies ... 40–41
Beat Note ... 111
Beat Oscillator ... 124, 131
Beginner's Code Practice Stations ... 19
Bent Antennas ... 184
Bias ... 43, 44, 50, 52, 71–72, 88, 92
Bias Supplies ... 150–152
Birdies ... 124, 138–139
Bleeder ... 145

Index

PAGE

Blocked-Grid Keying 108
Blocking 118
Blocking Condensers 41
Body Capacity 67, 116
Break-In 107
Bridge Circuits 38–39, 364, 365
Bridge Rectifiers 145
Broadside Arrays 188
Buffer Amplifier 58
Buffer Condenser 154
Bus Wire 375
Button, Microphone 93
Buzzer Code Practice Set 17
By-Pass Condensers 41, 119–120

C-L Ratios 35, 53, 72–73
C. W. Reception 111, 116–117, 136–137
Canadian General Manager 13
Capacitive Coupling 36, 66
Capacitive Reactance 31
Capacity 22–23
Capacity, Distributed 31–32
Capacity Measurement 364–366
Capacity of Condenser, Computing 377–378
Capacity-Resistance Time Constant 27–28
Carbon Microphones 93
Carrier 58, 84
Cascade Amplifiers 44
Cathode 23, 24, 42, 49–50
Cathode Bias 50
Cathode By-Pass 50
Cathode Keying 108–109
Cathode Modulation 86, 89–90
Cathode-Ray Oscilloscopes 55–57, 98–101, 361–363
Cathode-Ray Tubes 54–55
Cell 24
Center-Tap, Filament 50
Center-Tap Full-Wave Rectifier 144–145
Center-Tap Keying 108–109
Center-Tap Modulation 89–91
Channel 85–86
Characteristic Curves 42
Characteristic Impedance 167
Characteristics of Vacuum Tubes (Tables) 390–419
Charges, Electrical 21–23
Charts and Tables:
- Abbreviations for Electrical and Radio Terms .. 381
- Amateur Wavelength-Frequency Bands 16
- Antenna and Feeder Lengths 176, 183, 184, 195
- Antenna Gain 187, 188, 190
- Band-Width, Typical I. F. 129
- Battery Service Hours 334
- Cathode Modulation Performance Curves 90
- Characteristic Impedance 167, 180
- Coil-Winding Data 74
- Color Code for Radio Parts 378
- Conductivity of Metals 379
- Continental Code 17
- Conversion Factors 380
- Current Capacity of Power Wiring 380
- Decibel Chart 381
- Decimal Equivalents 385
- Dielectric Constants 377–378
- Drill Sizes 373
- Dynamotors (Types and Data) 337
- Electrical Symbols 379
- Emergency Rules 427
- FCC Frequency Allocations 438
- Gain of Directive Antennas 187, 188, 190
- Gas-Driven Generators (Types and Data) 337
- Gauges, Metal 385
- Greek Alphabet 380
- LC Constants 379
- Length, Units of 379
- Line-of-Sight U. H. F. Range 160
- Message Form 429
- Metric Prefixes 380
- Modulator Data 281–282
- Multiples and Sub-Multiples 380
- Prefixes, Amateur 438
- Q Code 436–438
- R-S-T Scale 425
- Radiation Angles 164, 165
- Radiation Patterns 182
- Radiation Resistance 164, 181
- Reactance Chart 382
- Resistance-Coupled Amplifier Data 97, 279–280
- Rhombic Antenna Design 186
- Safety Rules 271
- Schematic Symbols 384
- Surge Impedance 167, 180
- Tank Circuit Capacity 73

PAGE

- Tap Sizes 373
- Tools 373
- Tube Conversion Factors 382
- U. S. Radio Districts 446
- V-Antenna Design Chart 185
- Vacuum Tube Characteristics 390–419
- Vacuum-Tube Socket Diagrams 385–389
- Vacuum Tube Symbols 379
- Vibrator Power Supplies (Types and Data) 335
- Wire Table 383
- Word Lists for Accurate Transmission 424

Chassis Layout 373–374
Chirp, Keying 107, 110
Choke Coil 41
Choke-Coupled Modulator 87–88
Choke, Filter 147
Choke-Input Filter 145, 146–148
Circuit Diagram Symbols 384
Circuit, Electric 21
Circuits, Receiving (*see* "Receivers")
Circuits, Transmitting (*see* "Transmitters")
Circuits, Tuned 33–35
Class A, AB, B, and C Amplifiers 46–48
Class B Modulators 91–92, 283–284
Class B Modulator Data 281–282
Clicks, Keying 106–107, 110
Closed Circuit 21
Coaxial Line 166, 176–177
Coaxial Vertical Radiators 193–194
Code (Continental) and Code Practice 16–17, 18–19
Code Practice Sets 17–18
Code Practice Stations (for Beginners) 19
Coefficient of Coupling 36
Coils (*see* "Inductance")
Coils, Winding 376
Collinear Arrays 187–188
Color Codes, RMA 378
Colpitts Circuit 51
Combined A.C. and D.C. 40
Communications Department, ARRL 13, 435
Complex Waves 40
Compression, Volume 277–278, 282–283
Concentric Line Circuits 40, 81–82
Concentric Transmission Line 166, 176–177
Condenser 22–23
Condenser Capacitance (Computing) 377–378
Condenser Color Code 378
Condenser-Input Filter 145–146
Condenser Microphones 94
Condenser Series and Parallel Connections 27
Condenser Reactance 31
Condensers, Electrolytic 145
Condensers, Testing 365
Condensers, Voltage Rating 74, 145
Conductance 43
Conduction 23
Conduction, Electrolytic 24
Conduction, Gaseous 23
Conduction, Thermionic 24
Conductivity of Metals 379
Conductors 21
Constant, Time 27–28
Continental Code 17
Control Circuits, Station 269–270
Control Grid 42
Controlled-Rectifier Keying 108
Conversion Efficiency 125
Conversion Factors 380
Conversion Factors, Tube (Chart) 382
Converters, A.C.-D.C. 336
Converters, Frequency 124–126
Converters, U.H.F. 286–297
Copper-Oxide Rectifier Meter 359
Core 25
Corner Reflector Antenna 194
Counting Messages 434–435
Coupled Circuits 35–39
Coupling 35–37
Coupling, Antenna to Receiver 116
Coupling, Antenna to Transmitter 169–172
Coupling Condenser 36
Coupling, Interstage 66
Crackle Finish 375
Critical Angle 159
Critical Coupling 36–37
Critical Frequency 157
Critical Inductance 147
Cross-Modulation 47
Crystal Detector 349
Crystal Filters 129–131, 136–137
Crystal Microphones 93–94
Crystal Oscillators 52, 62–65

PAGE

Crystal-Controlled Transmitter Construction (*see* "Transmitters" *and* "Ultra-High Frequencies")
Crystals, Piezo-Electric 35, 61–62
Current, Alternating 28–30
Current Capacity of Wiring (Table) 380
Current, Direct 23–24
Current Feed for Antennas 166
Current Flow 21, 23–24
Current in A.C. Circuits 28
Current Lag and Lead 30
Current Measurement 28, 32, 357–358
Cut-Off Frequency 38
Cut-Off, Plate Current 43
Cycle 28

DX 10, 12, 15, 16
D'Arsonval Movement 357
Damping 34
Dead Spots 116
Decibel 46
Decoupling 96
Decrement 34
Deflection Plates 54
Deflection Sensitivity 54
Degeneration 45–46
Delayed A. V. C. 132
Delivering Messages 434
Delta Matching Transformer 177
Demodulation 111
Detection 111, 112–118, 131
Deviation Ratio 103
Diagrams, Schematic Symbols for 384
Diamond Antenna 185–186
Dielectric 22, 23
Dielectric Constant 22
Dielectric Constants (Table) 377–378
Dies 374–375
Diffraction 156, 160–161
Diode Detectors 113
Diode Voltmeters 360
Diodes 42
Dipole, Folded 194
Direct Coupling 36
Direct Current 23
Direct Feed for Antennas 166
Direct-Ray Transmission 159–160
Direction of Current Flow 24
Directional Antennas (*see* "Antenna Systems")
Director, Antenna 190
Directors, ARRL 13
Disassociation 23
Discriminator 140–141
Dissipation, Plate 44
Distortion 44
Distributed Inductance and Capacitance 31–32
Districts, Inspection 446
Dividers, Voltage 27
Divisions, ARRL 13
Doubler, Frequency 58, 79–80
Double Resonance 77
Double Superheterodyne 124
Doublet Antenna 162
Downward Modulation 101–102
Drift, Frequency 53, 61, 353
Drill Sizes (Table) 373
Drilling Holes 374
Driven Elements 187
Driver 66, 91
Driving Power 45, 72, 91–92
Drop, Voltage 27, 143
Dry Batteries 333
Dry Cell 24
Dummy Antennas 76
Duplex-Diode Triodes and Pentodes 49
Duplex Power Supplies 153
Dynamic Characteristics 43
Dynamic Instability 52–53
Dynamic Microphones 94
Dynamotors 335–336
Dynamotors (Table) 337

E 26
E-Layer 158, 161
Eddy Current 37
Effective Current Value 29
Efficiency, Amplifier 71
Efficiency, Transformer 32
Electric Charges 21–23
Electric Circuit 21
Electrical Length 167–168
Electrical Units and Symbols 379
Electricity 21
Electricity, Static 21–23

PAGE

Electrolytic Condensers 45
Electrolytic Condensers, Testing 365
Electrolytic Conduction 23–24
Electromagnetic Radiation 40
Electromagnetism 24–26
Electromotive Force (E.M.F.) 22
Electrons 21
Electron-Coupled Oscillator 59–60, 61
Electron Flow 23
Electron Gun 54
Electron-Ray Tubes 132
Electronic Conduction 24
Electrostatic Coupling 36
Electrostatic Field 22
Electrostatic Shield 76
Element, Antenna 186–187
Emergency Apparatus (*see* "Portable Equipment")
Emergency Communication 12
Emergency Coördinator 12
Emergency Corps 12, 426
Emergency Operating 426–428
Emission, Electron 24
End Effect 162
End-Fire Arrays 187, 188–189
Envelope, Modulation 84
Excitation 44, 45, 52, 74–75
Exciter 58
Exciter Units (*see* "Transmitters")
Executive Committee, ARRL 13
Expedition Communications 12–13

F-Layers 158
Fadeouts 158
Fading 159
Farad 22
Faraday Shield 76
Federal Communications Commission, Regulations 438–445
Feed, Series and Parallel 52
Feed-Through Insulators 376
Feedback 45–46, 51–52
Feeders and Feed Systems (*see* "Antenna Systems")
Fidelity 112
Field Intensity Meters 370–371
Field, Electrostatic 22
Field, Magnetic 24–26
Field, Strength 156
Filament 24, 49–50
Filament Supply 143
Fills and Repeats 423, 435
Filter, Crystal 129–131
Filters 38, 145–148
Filters, R.F. 109
Final Amplifier 58
First Detector 124–126
Five Meters (*see* "Ultra High Frequencies")
Flat Response 93
Flow, Current 24
Fluorescent Screen 54
Flux Density, Magnetic 26
Fly-Back 56
Flywheel Effect 34
Focussing Electrode 54
Folded Dipole 194
Force, Electromotive 22
Force, Lines of 22, 24–25
Formulas:
- A.C. Average, Effective and Peak Values 29
- Amplification Factor 43
- Antenna Length 162, 163, 179, 193
- Bias 50
- Bias Supply Bleeder 150
- Bridge Balance 38, 39
- Capacitive Reactance 31
- Capacity of Condenser 377
- Cathode Bias 50
- Characteristic Impedance 167
- Coefficient of Coupling 36
- Combined A.C. and D.C. 40
- Complex Wave 40
- Coupling Transformer Turns Ratio 91, 92
- Critical Inductance 147
- Crystal Frequency-Thickness Ratio 61
- Decibel 46
- Delta Matching Transformer Design 177
- Filter Design 147–148
- Frequency 33
- Grid Impedance 72
- Grid Leak Bias 50
- Impedance 31
- Impedance Matching 33, 86, 168, 178
- Impedance Ratios 32
- Impedance Transformation 168

PAGE

Inductance, Apparent ... 365
Inductance Calculation ... 377
Inductance, True ... 366
Inductive Reactance ... 31
Input Filter Choke ... 147
Linear Matching Sections ... 168
Modulation Impedance ... 86
Modulation Percentage ... 84, 99
Modulator Transformers, Turns Ratio ... 91, 92
Multipliers (Meter) ... 358
Mutual Conductance ... 43
Ohmmeter (from voltmeter) ... 363
Ohm's Law (A.C.) ... 31
Ohm's Law (D.C.) ... 26
Parallel Impedance ... 35
Plate Resistance ... 43
Power ... 26
Power Factor ... 31
Power Supply Output Voltage ... 147
Power Supply Transformer Voltage ... 148
Q ... 35, 367
Q Antenna ... 178
R/C Time Constant ... 27
Reactance ... 31
Regulation ... 143
Resonance ... 33
Resonant Impedance ... 35
Rhombic Antenna ... 186
Ripple ... 146, 147
Series, Parallel and Series-Parallel Capacities ... 27
Series, Parallel and Series-Parallel Inductance ... 27
Series, Parallel and Series-Parallel Resistances ... 27
Shunts, Meter ... 358
Standing-Wave Ratio ... 168
Surge Impedance ... 167
Time Constant ... 27–28
Transformer Volt-Ampere Rating ... 148
Transmission Line Length ... 168, 178, 189
Transmission Line Spacing ... 167
Turns Ratio ... 32
U.H.F. Range ... 160
Voltage Dividers ... 27, 152
Voltage Regulation ... 143
Voltage Regulator Limiting Resistor ... 149
Wavelength ... 33
Wavelength-Frequency Conversion ... 39, 351
Frequencies, Amateur ... 15–16
Frequency ... 28–29, 39
Frequency Allocations, Non-Amateur ... 438
Frequency Converters ... 124–126, 286–297
Frequency Deviation ... 103
Frequency Distortion ... 44
Frequency Divider ... 53
Frequency Drift ... 53, 61, 353
Frequency Measurement:
  Absorption Frequency Meters ... 349–350
  Audio Frequencies ... 357
  Frequency Standards ... 354–356
  Heterodyne Frequency Meters ... 351–354
  Lecher Wires ... 350–351
  Methods ... 356–357
  WWV Schedules ... 348
Frequency Modulation:
  Constructional:
    Modulator-Oscillator Unit ... 317–320
    56-Mc. F. M. Transmitter ... 320–322
    5-Mc. F. M. I. F. Amplifier ... 300–303
  Principles ... 84, 102–105, 139–142, 300
Frequency Multipliers ... 58, 79–80
Frequency Response ... 44, 93
Frequency Spectrum ... 30
Frequency Stability ... 52–53, 107
Frequency Standards ... 354–356
Frequency-Wavelength Conversion ... 39
Full-Wave Rectifiers ... 144–145
Fundamental Frequency ... 29, 39
Fundamental Radio System ... 21

Gain Control ... 96–97, 120
Galvanometers ... 28
Ganged Tuning ... 122
Gaseous Conduction ... 23
Gaseous Regulator Tubes ... 148–149
Genemotors ... 335–336
Generators ... 336–337
Generators, Gas-Driven (Table) ... 337
Godley, Paul ... 10
Government Licenses ... 20
Grid ... 42
Grid Bias ... 43, 44, 50, 52, 71–72
Grid-Bias Modulation ... 86, 88–89
Grid-Control Rectifiers ... 49, 108

PAGE

Grid Current ... 43
Grid Driving Power ... 45
Grid Emission ... 77
Grid Excitation ... 44, 45
Grid Impedance ... 72
Grid Keying ... 108
Grid Leak ... 50
Grid Leak Detectors ... 113–114
Grid Neutralization ... 67, 68
Grid-Plate Oscillator ... 64
Grid Swing ... 46
Ground Effect ... 163–165
Ground Potential ... 41
Ground Wave ... 156–157
Grounded Antennas ... 193
Grounds ... 41
Guys, Antenna ... 342–343

Half-Wave ... 39
Half-Wave Antenna ... 162–163
Half-Wave Rectifiers ... 144
Halyards, Antenna ... 343
Hand Capacity ... 67
Harmonic Distortion ... 44
Harmonic Frequencies ... 29, 39
Harmonic Generation ... 79–80
Harmonic Operation of Antennas ... 39, 179
Harmonic Resonance ... 39
Harmonic Suppression ... 76–77, 172
Hartley Circuit ... 51, 59
Hash ... 154
Headquarters, ARRL ... 13
Heater ... 50
Heating Effect ... 26
Henry ... 25
Hertz Antenna ... 162
Heterodyne Frequency Meter ... 351–354
Heterodyne Reception ... 111
High-Frequency Oscillator (Receiver) ... 123–124, 126–127
High-Pass Filters ... 38
High-Vacuum Rectifiers ... 143
Hiram Percy Maxim Memorial ... 13–14
Hiss Noise ... 120, 134
History of Amateur Radio ... 9–14
Holes, Drilling and Cutting ... 374
Hook-Up Wire ... 375
How to Become a Radio Amateur (Booklet) ... 14
Hum ... 98, 102, 116

I ... 26
Iconoscopes (Table) ... 419
Image, A.F. ... 129
Image, R.F. ... 124
Image Ratio ... 124, 133
Impedance ... 31, 34–35
Impedance, Antenna ... 162, 163, 164, 181
Impedance, Grid ... 72
Impedance Matching ... 33, 168
Impedance Ratio, Transformer ... 32–33
Impedance, Tank ... 60, 71, 72–73
Impulse Noise ... 134
Indicators, Tuning ... 132–133
Inductance ... 25
Inductance Calculation ... 377
Inductance, Distributed ... 31–32
Inductance Measurement ... 364–366
Inductance Winding Charts ... 74
Induction ... 25
Inductive Coupling ... 36
Inductive Neutralization ... 68–69
Inductive Reactance ... 31
Infinite Impedance Detector ... 114–115
Input Capacity, Tube ... 43, 45
Input Choke ... 147
Input Resistance, Tube ... 121
Inspection Districts ... 446
Instability ... 52–53
Instantaneous Plate Current ... 144
Instruments:
  A.C. ... 32, 359–361
  Ammeters ... 28, 358–359
  Audio Oscillator ... 368
  Bridges ... 39, 364, 365
  D.C. ... 28, 358–359
  Field-Intensity Meters ... 370–371
  Frequency Meters ... 349–354
  Frequency Standards ... 354–356
  I.F. Test Oscillator ... 368–369
  L, C and Q Meter ... 365–367
  Multi-Range V-O-M ... 358
  Ohmmeters ... 363–364
  Reactance Meter ... 364

PAGE

Vacuum-Tube Voltmeters 360–361
Voltmeters 28, 358–361
Insulators 21
Interelectrode Capacitances 43
Intermediate Frequency 123, 127–128
Intermediate Frequency Amplifiers 111, 124, 127–131
Intermediate Frequency Test Oscillator 368
International Amateur Radio Union 11, 14
Interpolation Oscillator 354, 356–357
Interruption Frequency 117–118
Interstage Coupling 66
Interstage Transformers, I.F. 128–129
Inverse Peak Voltage 144
Inversion, Temperature 161
Inverted Amplifier 71
Inverter, Phase 97
Ionization 23
Ionosphere 157–158
Ions 23
Iron-Vane Meters 359

J Antenna 193

Key Chirps 107, 110
Key Clicks 106–107, 110
Key, How to Use 19–20
Keying:
Back Wave 106
Break-In 107
Key-Click Reduction 109
Methods:
Cathode or Center-Tap 108
Blocked Grid 108
Grid-Controlled Rectifier 108
Plate 107
Primary 108
Screen Grid 107
Tube Keyer 265
Waveform 106
Suppressor Grid 108
Oscillator Keying 110
Parasitic Clicks 110
Kilocycle 29
Kilohm 26
Kilovolt 26
Kilowatt 26
Kilowatt-Hour 26
Kinescopes (Table) 403–404

LC Constants (Table) 379
L-C Ratios 35, 53, 72–73
LD-Cut Crystals 61
L-Section Filters 38
Lag Circuits 109
Lag, Current 30
Lag, Keying 106
Land Line Check 430
Laws Concerning Amateur Operation 438–445
Layer Height 157–158
Lead, Current 30
Leakage, Checking Condenser 365
Leakage Reactance 32
Lecher Wires 350–351
License Manual 20
Licenses, Amateur 20
Lightning Protection 343–344
Limiter 139–140
Limiting, Audio 97, 134
Limiting (Noise) Circuits 134–136
Line-of-Sight Transmission 160, 161
Line Voltage Adjustment 154–155
Linear Amplifiers 47
Linear Antenna Transformers 168, 178–179
Linear Circuits 39–40, 80–82
Linear Time Base 56, 363
Linearity 85, 86, 90, 100, 103
Lines of Force 22, 24–25
Lines, Resonant 40
Link Coupling 36, 66, 171–172
Load 21, 33, 43, 44, 143
Load Impedance 44, 71
Local Oscillator (Receiver) 123–124, 126–127
Locking 53
Log Books 425
Long-Wire Antennas 179–182
Loops 39
Loose Coupling 36
Low-Level Modulators 92
Low-Pass Filters 38
Low-Power Transmitters (*see* "Transmitters")
Lumped-Constant Circuits 82–83

PAGE

Magic-Eye Tubes 132
Magnetic Field 24–25
Magnetic Storms 158
Magnetism 24–26
Magnetomotive Force 25, 26
Manual, License 20
Masts 341–342
Matching Impedances 33
Materials 373
Maximum Current Value 29
Measurements:
Antenna 370–371
Capacity 364–366
Current 28, 32, 357–358
Frequency 348–357
Inductance 364–366
Modulation 98–102, 369–370
Power 28, 359, 360–361
Q 366–367
Receivers 367–368
Resistance 363–364, 366–367
Transmitters 268–269, 369–370
Tubes 370
Voltage 28, 357–363
Measuring Instruments 28, 32, 349–371
Megacycle 29
Megohm 26
Memorizing the Code 16–17
Mercury Vapor Rectifiers 49, 144
Message Form 429–430
Metals, Relative Conductivity of 379
Meters (*see* "Instruments")
Metric Prefixes 380
Mho 43
Microammeters 28
Microampere 26
Microfarad and Micro microfarad 22
Microhenry 25
Micromhos 43
Microphones 84, 92–94
Microvolt 26
Microwatt 26
Milliammeters 28
Milliampere 26
Millihenry 25
Millivolt 26
Milliwatt 26
Mixers 124–126
Mobile Equipment 303–306, 310–313, 327–332, 333–339
Modulation:
Adjustments and Testing 98–102, 369–370
Amplitude Modulation 84–86
Capability 85
Cathode Modulation 89–91
Characteristic 85
Envelope 84
Frequency Modulation 102–105
Grid-Bias Modulation 88–89
Impedance 86
Measurements 98–102, 369–370
Methods 84
Percentage 84
Plate Modulation 86–88
Power 86
Modulators 91–92, 272–284
Molecular Friction 26
Molecules 21
Monitored Frequencies 428
Monitors 100, 369–370
Monoscopes (Table) 419
Motorboating 96, 139
Mounting Crystals 61–62
Moving Coil Meters 357–358
Moving Iron Vane Meters 359
Mu 43
Multi-Band Antennas 182–184
Multi-Element Tubes 48–49
Multi-Hop Transmission 159
Multi-Purpose Tubes 49
Multipliers, Frequency 58, 79–80
Multipliers, Voltmeter 28, 358
Multivibrator 53, 354–356
Mush 139
Mutual Conductance 43
Mutual Inductance 36

Naval Communications Reserve (NCR) 12
Negative Charges 22
Negative Resistance 53
Negative Resistance Oscillators 53
Neutralization 67–70
Neutralizing Bridge Circuits 39

Index

PAGE

Neutralizing Condensers ... 69
Nodes ... 39
Noise ... 97–98, 102, 120–121, 134
Noise Ratio ... 112, 120–121, 133
Noise Reduction ... 134–136
Non-Resonant Lines ... 175–179
Non-Synchronous Vibrators ... 154
Nucleus ... 21
Numbering Messages ... 430

Ohm ... 26
Ohm's Law ... 26
Ohm's Law for A.C. ... 31
Ohmmeters ... 363–364
Open Circuit ... 21
Open-Wire Line ... 166
Operating Angle, Amplifier ... 71, 79–80
Operating Procedure ... 420–435
Operator's License ... 20
Originating Traffic ... 432
Oscillating Detector ... 115–117
Oscillation ... 50–51
Oscillator Keying ... 110
Oscillators ... 50–53
Oscilloscopes ... 55–57, 98–101, 361–363
Output Capacity, Tube ... 43
Output Limiting ... 97
Output Transformer ... 44
Overmodulation ... 85
Overmodulation Indicators ... 370

P ... 26
Padding Condenser ... 122
Parallel Amplifiers ... 46
Parallel Antenna Tuning ... 171
Parallel Capacities ... 27
Parallel Circuits ... 33–34
Parallel Feed ... 52
Parallel Impedance ... 33, 34–35
Parallel Inductances ... 27
Parallel Resistances ... 26–27
Parallel Resonance ... 33–34
Parasitic Elements ... 190
Parasitic Oscillators ... 77–79
Patterns, Oscilloscope ... 55–56
Patterns, Radiation ... 165
Peak Current Value ... 29
Peak Diode Voltmeter ... 360
Peak Plate Current ... 144
Peak Voltage Rating ... 73–74
Pentagrid Converters ... 125
Pentode Amplifiers ... 66–67
Pentode Crystal Oscillators ... 62–65
Pentodes ... 49
Period ... 28
Permeability ... 25–26
Persistence, Screen ... 54
Phase ... 29–30
Phase Angle ... 30
Phase Difference ... 30
Phase Inversion ... 97
Phase Modulation ... 84
Phase Relations, Amplifiers ... 45
Phased Antennas ... 186–190
Phasing Control ... 130
'Phone (*see* "Radiotelephony")
Photometric Power Measurements ... 360
Pickup Coil ... 169
Pi-Section Antenna Couplers ... 169–171, 257–258
Pi-Section Filters ... 38
Pierce Oscillator ... 63
Piezo-Electricity ... 35
Piezo-Electric Crystals ... 61–62
Piezo-Electric Microphone ... 93–94
Plate ... 24, 42
Plate Current ... 42
Plate Current Shift ... 101–102
Plate Detectors ... 114
Plate Dissipation ... 44
Plate Efficiency ... 45, 52
Plate Keying ... 107
Plate Load Resistance ... 43
Plate Modulation ... 86–88
Plate Neutralization ... 67–68
Plate Resistance ... 43
Plate Supply ... 143
Polarity ... 22
Polarization ... 156, 162, 164–165
Pole ... 22
Portable Equipment ... 303–306, 310–313, 327–332, 333–339
Positive Charges ... 22
Pot Oscillator ... 82–83
Potential Difference ... 22
Potentiometers ... 27

PAGE

Power ... 26
Power Amplification ... 45
Power Amplifiers, Receiver ... 119
Power Factor ... 31
Power Gain, Antenna ... 162
Power Input ... 45
Power Measurement ... 359, 360–361
Power Output ... 52, 75–76
Power Sensitivity ... 45
Power Supply Keying ... 107
Power Supply:
  Battery Service Hours (Table) ... 334
  Constructional:
    100-Volt Bias Supply ... 238–239
    300-Volt 75-Ma. Bias Supply ... 233
    325-Volt 135-Ma. Vibrator Supply ... 338
    350-Volt 100-Ma. Voltage-Regulated Supply ... 241
    450-Volt 130-Ma. Plate Supply ... 214
    500-450-Volt 200-Ma. Plate Supply ... 220–221
    1000-400-Volt 125-150-Ma. Dual Supply ... 258
    1250-1060-830-Volt 250-Ma. Plate Supply ... 225–226
    1500-1250-Volt 425-Ma. Plate Supply ... 238
    2480-2025-Volt 450-Ma. Plate Supply ... 260–261
  Dry Batteries ... 24, 333
  Dynamotors ... 335–336
  Dynamotors (Table) ... 337
  Genemotors ... 335–336
  Generators ... 336–338
  Generators, Gas-Driven (Table) ... 337
  Portable ... 333–338
  Principles ... 143–155
  Storage Batteries ... 24, 333–334
  Vibrators ... 154, 334–335
  Vibrator Power Supplies (Table) ... 335
  Windchargers ... 336
Prefixes, Amateur ... 438
Prefixes, Metric ... 380
Preselection ... 133–134
Primary ... 32, 35–36
Primary Keying ... 108
Propagation ... 156–161
Pulleys, Antenna ... 343
Pulling ... 125
Pulsating Current ... 40
Pure D.C. ... 143
Push-Back Wire ... 375
Push-Pull Amplifiers ... 46
Push-Pull Neutralization ... 69
Push-Push Doubler ... 79

Q ... 34, 35, 37, 60, 72, 80
Q Antenna ... 177–178
Q Code ... 436–438
Q Measurement ... 366–367
QRR ... 427, 428, 438
QST ... 10, 13, 14
Quarter Wave ... 39
Quartz Crystals (*see* "Crystals")
Quench Frequency ... 117–118

R ... 26
R.M.S. Current Value ... 29
R-S-T System ... 425–426
Rack Construction ... 265–268
Radian ... 29
Radiation ... 40
Radiation Angle ... 158, 162
Radiation Resistance ... 40
Radiator (*see* "Antennas")
Radio Frequency Amplifiers (Receivers) ... 119–121
Radio Frequency Choke Coil ... 41
Radio-Frequency Resistance ... 34
Radio Inspection Districts ... 446
Radiotelephony:
  Adjustments and Testing ... 98–105
  Class-B Modulators ... 91–92, 283–284
  Class-B Modulators (Table) ... 281–282
  Constructional:
    0.7-Watt Class-B 1G6G Transceiver Mod ... 327–328
    3-Watt Speech-Amplifier/Grid Modulator ... 272–273
    6-Watt P.P. 2A3 Speech-Amplifier and Driver with Volume Compression ... 277–283
    8-Watt 6Y7G Class-B Modulator ... 330–332
    10-Watt Class-B 6A6 Modulator ... 273–275
    10-Watt Class-B 6N7 Modulator ... 310–312
    20-Watt 6L6 Speech Amplifier/Modulator ... 275–276
    40-Watt 6L6 Speech Amplifier/Modulator ... 276–277
    FM Modulator-Oscillators ... 317–320, 320–322
  Microphones ... 92–94
  Modulation ... 84–91
  Monitors ... 369–370
  Operating Procedure ... 423–424
  Principles ... 84–105
  Reception ... 137

PAGE

Resistance-Coupled Speech Amplifier Data ... 279–280
Speech Amplifiers ... 94–98
Range, U.H.F. ... 160
Ray, Direct and Reflected ... 159–160
Reactance ... 30–31
Reactance, Capacitive ... 31
Reactance Chart ... 382
Reactance, Inductive ... 31
Reactance Meter ... 364
Reactance Modulator ... 104–105
Receivers:
Antennas for ... 194–195
Constructional:
1-Tube 2-Stage Regenerative (6C8G) ... 196–198
2-Tube Superheterodyne (6K8-6C8G) ... 198–201
3-Tube Wide-Range Superheterodyne ... 201–204
Regenerative Pre-Selector ... 210–212
(*See also* "Ultra-High Frequencies — Receivers")
Measurements ... 367–368
Portable ... 338–339
Principles and Design ... 111–142
Test Equipment ... 367–368
Reflex Voltmeter ... 360–361
Regenerative I.F. ... 129
Rectification ... 42
Rectifiers ... 42, 49, 143–144
Rectifier Circuits ... 144–145
Rectifiers (Table) ... 405–406
Reflected Impedance ... 33
Reflected Waves ... 39
Reflection of Radio Waves ... 156, 157–160, 163
Reflector ... 190
Refraction of Radio Waves ... 157
Regeneration ... 45
Regeneration Control ... 115–116
Regenerative Detectors ... 115
Regenerative Receivers ... 111
Regulation, Voltage ... 143
Regulations, Amateur ... 438–445
Regulator, Voltage ... 148–149
Relaxation Oscillator ... 53
Relay, Keying ... 107
Relay Procedure ... 432–433
Reluctance ... 26
Repulsion ... 22
Resistance ... 21, 26
Resistance-Capacity Filter ... 38
Resistance-Capacity Time Constant ... 27–28
Resistance-Coupled Amplifier Data (Chart) ... 97, 279–280
Resistance-Coupled Audio Amplifiers ... 95–96
Resistance Coupling ... 36, 95–96
Resistance Measurement ... 363–364, 366–367
Resistance, Negative ... 53
Resistance, Radiation ... 40
Resistance, R.F. ... 34
Resistances in Series and Parallel ... 26–27
Resistor ... 26
Resistor Color Code ... 378
Resonance ... 33
Resonance Curve ... 112
Resonant Circuits ... 33–35
Resonant Frequency ... 33
Resonant Impedance ... 35
Resonant Line Circuits ... 40
Resonant Transmission Lines ... 172–175
Rhombic Antenna ... 185–186
Ribbon Microphones ... 94
Ripple ... 145
Rochelle-Salt Crystals ... 93
Root-Mean-Square Value ... 29
Rotary Antennas ... 191, 344–346

S Meters ... 132–133
S Scale ... 425–426
Safety Rules ... 271
Saturation Point ... 42
Sawtooth Wave ... 55–56
Schematic Symbols ... 384
Screen Grid ... 48
Screen-Grid Keying ... 107
Second Detector ... 124, 131, 134–135
Secondary ... 32, 35–36
Secondary Emission ... 48
Selectivity ... 34, 112, 129
Selectivity Control ... 131
Self-Bias ... 50
Self-Controlled Oscillators ... 59–61
Self-Induction ... 25
Self-Oscillation ... 50–51
Self-Quenching ... 118
Sending ... 20
Sensitivity, Microphone ... 92–93
Sensitivity, Receiver ... 112
Series Antenna Tuning ... 171

PAGE

Series Capacities ... 27
Series Circuits ... 33
Series Feed ... 52
Series Inductances ... 27
Series Resistances ... 26–27
Series Resonance ... 33
Service Message ... 434
Servicing Receivers ... 137–139, 367–368
Sharpness of Resonance ... 34
Sheet Metal Working ... 375
Shielding ... 37–38, 76–77, 102, 119
Shields, Electrostatic ... 76–77
Short Wave Receivers (*see* "Receivers")
Shot Noise ... 134
Shunts, Meter ... 28, 358
Sidebands ... 85–86, 103–104, 106
Signals ... 44
Signal Generators ... 368
Signal-Handling Capability ... 113
Signal-Noise Ratio ... 112, 120–121, 133
Signal-Strength Indicators ... 132–133
Signal-Strength Scale ... 425–426
Silencers, Noise ... 134–136
Sine Curve ... 28
Sine Wave ... 28
Single-Signal Reception ... 129–131
Single-Wire Feed ... 166, 175
Skin Effect ... 34
Skip Distance ... 15, 158–159
Sky Wave ... 15, 16, 156, 158–159
Slide-Back Voltmeter ... 361
Smoothing Choke ... 147
Socket Connections (Diagrams) ... 385–389
Solar Cycle ... 15, 158
Soldering ... 376
Space Charge ... 42
Spectrum, A.C. ... 30
Speech Amplifiers ... 94–98
Speech Amplifier Design Chart ... 279–280
Sporadic-E Ionization ... 161
Squegging ... 118, 139
Stability, Frequency ... 52–53
Stability, Receiver ... 112, 139
Stabilization, Voltage ... 148–150
Stage Gain ... 95
Standards, Frequency ... 354–356
Standing Waves ... 39
Standing Wave Ratio ... 169
Starting Voltage ... 148
Static Characteristics ... 43
Static Charge ... 21–22
Static Electricity ... 21–23
Station Control Circuits ... 269–270
Station License ... 20
Storage Batteries ... 24, 333–334
Stub Antenna Matching ... 178–179
Substitution Measurements ... 359
Sunspot Cycle ... 15, 158
Super-Control Tubes ... 49
Superheterodyne ... 111, 123–124
Superimposed Currents ... 40–41
Superregeneration ... 117–118
Superregenerative Detectors ... 111–112, 117–118
Superregenerative Receivers ... 295–300, 303–305
Suppressor Grid ... 49
Suppressor-Grid Keying ... 108
Suppressor-Grid Modulation ... 89
Suppressor, Noise ... 134–136
Surge Impedance ... 167
Sweep ... 55
Sweep Circuits ... 56, 363
Swing, Grid ... 46
Swinging Choke ... 147
Switching, Control Systems ... 269–270, 305–306
Symbols, Electrical ... 379
Symbols, Schematic ... 384
Synchronization ... 56–57
Synchronous Vibrators ... 154

Tables and Charts (*see* "Charts and Tables")
Tank Circuits ... 52, 60, 72–73
Taps ... 374–375
Tapped Circuits ... 33
Temperature Coefficient of Crystals ... 61
Temperature Inversion ... 161
Termination, Line ... 168
Test Equipment ... 357–371
Test Oscillator ... 368
Tetrode Amplifiers ... 66–67
Tetrode Crystal Oscillators ... 62–63
Tetrodes ... 48
Thermal Agitation ... 120
Thermionic Conduction ... 24
Thermionic Emission ... 24

PROPERTY OF U. S.

PAGE

Thermocouple Ammeters 32, 359
Threads, Cutting 374–375
Threshold Control 136
Thump Filters 109
Tickler 51
Tight Coupling 36–37
Time Constant 27–28
Tone Control 119
Tools 372
Trace, Cathode-Ray 54, 56
Tracking 127
Transatlantic Tests 10
Transceivers 16, 327–330
Transconductance, Grid-Plate 43
Transformer Color Codes 378
Transformer Coupling 36, 86, 96
Transformer Design 148
Transformerless Power Supplies 152
Transformers 32–33
Transformers, I.F. 128–129
Transmission Lines 166–179
Transmitters:
  Antenna Coupling 169–172
  Antenna Tuners (*see* "Antennas")
  Constructional:
    Complete Transmitter Assemblies:
      70-Watt Input 3-Band With 815 Final 220
      75-Watt Multi-Band With 807 Final 233
      75-Watt All-Band With 807 Final 254–255
      90-Watt C.W. With P.P. 6L6's 224
      100-Watt 5-Band With 1623 Final 259
      450-Watt Compact Transmitter 258
      450-Watt Bandswitching Transmitter 240
      450-Watt Variable-Frequency Gang-Tuned . 251
      500-Watt Single-Ended Transmitter 263–265
      1-Kw. Push-Pull Final Transmitter 263–265
    Exciters or Low-Power Transmitters:
      Variable-Frequency Exciter 240–247
      15-Watt Output 6L6 Bread-Board 213–214
      30-Watt Output 6L6-6L6 4-Band 216–219
      40-Watt Output 6L6-815 3-Band 219–221
      50-Watt Output 6L6-807 Plug-In Coil . . . 251–254
      50-Watt Output 6C5-6N7-807 Bandswitching 230–233
      60-Watt Output 6L6-6L6's P.P. 222–224
      75-Watt Output 6L6-HY65-1623 258–259
      150-Watt Output 6L6-HY67 224–226
      150-Watt Output 6L6-809's P.P. 227–229
    Power Amplifiers:
      450-Watt Input Push-Pull 255–257
      450-Watt Band-Switching Push-Pull 233–238
      450-Watt Gang-Tuned Push-Pull 247–251
      500-Watt Single-Ended 259–261
      1-Kw. Push-Pull 261–263
  (*See also* "Ultra-High Frequencies—Transmitters")
  Control Circuits 269–270
  Measurements 369–370
  Metering 268–269
  Portable 339
  Principles and Design 58–83
  Rack Construction 265–268
Trapezoidal Pattern 98–100
Triangular Spectrum 103
Trimmer Condenser 122
Triodes 42–44
Triode Crystal Oscillators 62
Triple-Tuned Transformers 128–129
Tri-Tet Oscillator 63–65
Troposphere Refraction 161
Trouble Shooting (Receivers) 137–139, 367–368
Tube Checking 371
Tube Conversion Factors (Chart) 382
Tube Keyer 109, 265
Tube Noise 120–121
Tubes (*see* "Vacuum Tubes")
Tuned Circuits 33–35
Tuned-Grid Tuned-Plate Circuit 52
Tuned R.F. Receiver 111
Tuning Indicators 132–133
Tuning Receivers 116–117, 136–137, 142
Tuning Transmitters 60–61, 63, 64–65, 74–77
Turns Ratio 32
Twisted Pair Feed 166, 175–176
Two-Conductor Line 80–81

Ultraudion Circuit 52
Ultra-High Frequencies:
  Antenna Systems 346
  Development 11–12
  Constructional:
    Receivers:
      224 & 112 Mc. Superregenerative 295–297
      112-Mc. Mobile Superregenerative 303–305
      112-Mc. T.R.F. Superregenerative 297–300
      F.M. I.F. Amplifier 300–303

PAGE

    Converters:
      112 & 56 Mc. 9000-Tube Converter 286–290
      112 & 56 Mc. 1232-7A4 Converter 290–293
      56-Mc. 1852-6K8 Converter 293–295
    Transceivers:
      112-Mc. Battery Transceiver 327–330
    Transmitters:
      224-Mc. HY75 Oscillator 326–327
      112-Mc. 815 Oscillator 324–326
      112-Mc. P.P. T-40 Oscillator 323–324
      112-Mc. P.P. 7A4 Transmitter 322–323
      112-Mc. 15-Watt Mobile Transmitter 330–332
      112-56-28-Mc. 60-Watt 815 Transmitter . . 313–316
      10-Watt 56-Mc. 6A6 Transmitter 307–310
      12-Watt 56-Mc. Mobile Transmitter 310–313
      300-Watt 56-Mc. P.P. 35T Amplifier 316–317
      F.M. Modulator-Oscillator 317–320
      F.M. 7-Watt 56-Mc. Transmitter 320–322
Upward Modulation 101–102

V Antennas 184–185
V-Cut Crystals 61
Vacuum Tube Voltmeters 359, 360–361
Vacuum Tubes 24, 42–57
Vacuum Tube Conversion Factors (Chart) 382
Vacuum Tube Testing 370
Vacuum Tube Socket Connections 385–389
Vacuum Tube Symbols 379
Vacuum Tube Tables:
  Cathode-Ray Tubes 403–404, 419
  Receiving 390–406
  Rectifiers 403, 405–406
  Transmitting 406–419
Variable-μ Tubes 49
Variable Selectivity 129, 130–131
Velocity, Angular 29
Velocity Microphone 94
Velocity of Radio Waves 39
Vibrator Supplies (Table) 335
Vibrators 154, 334–335
Virtual Height 157–158
Volt 22
Volt-Amperes 31, 148
Voltage Amplification 45
Voltage Dividers 27, 152
Voltage Drop 27
Voltage-Doubling Circuits 152–153
Voltage Feed for Antennas 166
Voltage Measurement 28, 357–363
Voltage Ratio, Transformer 32
Voltage Regulation 143
Voltage Rise 34
Voltage-Stabilized Power Supplies 148–150
Voltmeters 28, 358–361
Volume Compression 277–278, 282–283
Volume Control 96–97, 131–133
Volunteer Code Practice Stations (for Beginners) 19

W1AW-WLMK, ARRL Hq. Station . . . . *Frontispiece*, 13–14
W1INF 13
W1MK 13
WAC Certificates 11, 14, 435
WAS Certificates 435
WWV Schedules 348
Watt 26
Watt-Hour 26
Wattmeter 28
Wave Angle 158
Wave Envelope Pattern 98–100
Wave Propagation 156–161
Waveform 29, 44, 100, 106
Wavelength 39
Wavelength-Frequency Conversion 39
Wavelength Performance 15–16
Wavelengths, Amateur 16
Wavemeter (*see* "Frequency Meters and Monitors")
Wheatstone Bridge 38–39, 364
Windchargers 336
Winding Coils 376
Wire Table 383
Wiring Apparatus 375–376
Wiring, Current Capacity 380
Wiring Diagrams 384
Word Lists for Accurate Transmission 424
Working Voltage 145
Workshop Practice 372–376

X 31
X-Cut Crystals 61

Y-Cut Crystals 61

Z 31
Zero Beat 117
Zero-Beat Indicators 357
Zepp Feed for Antennas 173

PROPERTY OF U. S.