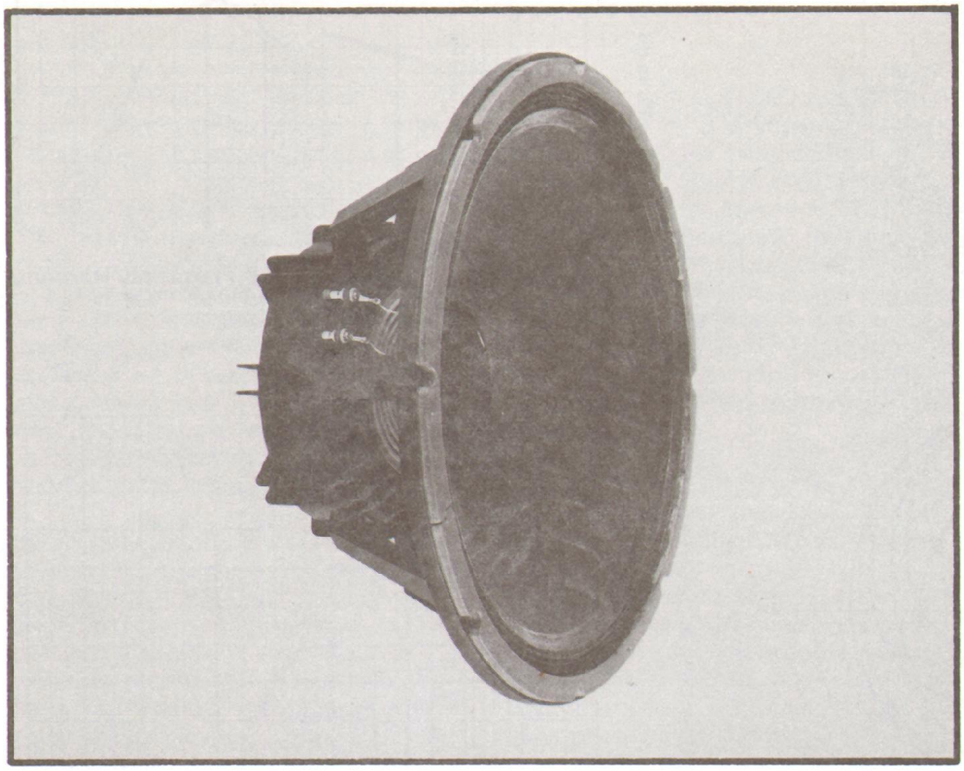

Electro-Voice®
a gulton company

Model EVM-18B Series II
18-Inch Musical Instrument Loudspeaker

SPECIFICATIONS

Usable Frequency Response in TL505 Vented 7.1 cu. ft. Enclosure (See Frequency Response Section):
40 – 6000 Hz

Sound Pressure Level, Indicated Watts into Nominal Impedance (Using Spectrum Specified in EIA Standard SE-103 Section SE3),
30 ft at .001 watt input:
51.5 dB
10 ft at 1 watt input:
91 dB
4 ft at 200 watts input:
122 dB

Long-Term Average Power Handling Capacity (See Power Handling Section):
200 watts
(per EIA Standard RS-426)

Impedance, (See Figure 8)
Nominal:
8 ohms
Minimum:
6.3 ohms

Voice Coil Diameter:
6.35 cm (2.5")

Magnet Weight:
2.2 kg (4.9 lbs)

Dimensions,
Overall Diameter:
45.7 cm (18.0")
Overall Depth:
20.3 cm (8.0")
Mounting Bolt Circle:
43.8 cm (17.25")
Mounting Hole Diameter, Eight Evenly Spaced Holes:
.71 cm (.28") (Letter L Drill)
Baffle Opening Diameter, Front Mounting:
42.22 cm (16.63")
Rear Mounting:
41.59 cm (16.38")

Optional Mounting Accessory:
SMH-1 (see Installation section)

Net Weight:
9.9 kg (22 lbs)

DESCRIPTION

The EVM-18B, Series II is an 18-inch speaker designed for professional high-level, high-quality musical instrument and sound reinforcement systems. For bass guitar use, the EVM-18B can provide stronger than usual output at the lowest bass tones (40-50 Hz) and its high-frequency response is tailored for a traditional bass sound. The EVM-18B is also appropriate for high-output sub-woofer applications, capable of essentially flat response in the 30-40 Hz range when properly enclosed. The EVM-18B, Series II incorporates voice coil refinements, including beryllium copper flatwire leads, that have improved performance. Power capacity is 200 watts per EIA Standard RS-426. The Power Handling Test section describes this rating in detail. This improvement in the EVM-18B's already highly regarded reliability has been made without changing its other performance characteristics in any way.

The construction of the EVM-18B features a low mass edgewound voice coil on a rugged laminated polyimide coil form, driven by our largest 16 lb magnetic structure. Also featured are a heavy-duty curvilinear cone and a fatigue-resistant cone suspension. Both the coil and magnetic structure are vented. All of this is packaged in a husky eight-spoke diecast aluminum frame with a heat-radiating back cover.

The EVM-18B may be front or rear mounted without an adaptor. The optional SMH-1 speaker mounting kit facilitates front mounting (see Installation section).

©Jörg Hickmann Michael Otto

FREQUENCY RESPONSE

Frequency response was measured with the EVM-18B in a TL505 enclosure placed in a half-space anechoic (echoless) environment at 10 feet on axis with 4 volts of swept 1/3-octave random noise. The frequency response curve is shown in Figure 2.

DIRECTIONAL PERFORMANCE

The directional characteristics of the EVM-18B in the TL505 7.1 cubic feet vented enclosure were measured by running a set of polar responses, in E-V's large anechoic chamber, at selected octave band center frequencies. The test signal was octave bandwidth-limited pseudo-random pink noise centered at the frequencies indicated in Figure 3. The curves show horizontal (side-to-side) dispersion when the enclosure's long axis is vertical. The vertical (up-and-down) polar responses deviate only slightly from the horizontal responses.

Additional typical data is provided in Figures 4 and 5 which indicate 6-dB-down beamwidth versus frequency and directivity factor, respectively, for an EVM-18B in the TL505 enclosure.

POWER HANDLING TEST

To our knowledge, Electro-Voice was the first U.S. manufacturer to develop and publish a power test closely related to real-life conditions. First, we use a random noise input signal because it contains many frequencies simultaneously, just like real voice or instrument program. Second, our signal contains more energy at extremely high

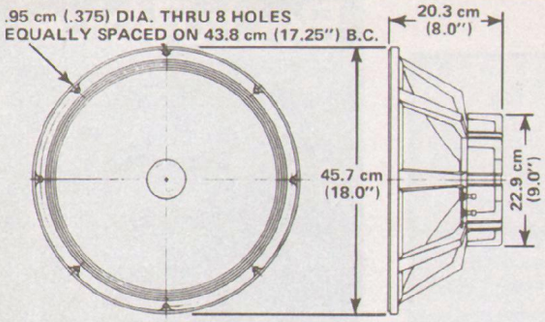

FIGURE 1 —Dimensions

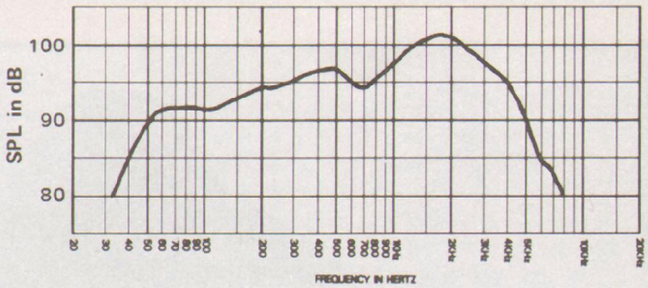

FIGURE 2 – TL505/EVM-18B Frequency Response
(Swept 1/3-Octave Band Pink Noise, 4 V at 10 ft. on Axis, Half-Space Environment)

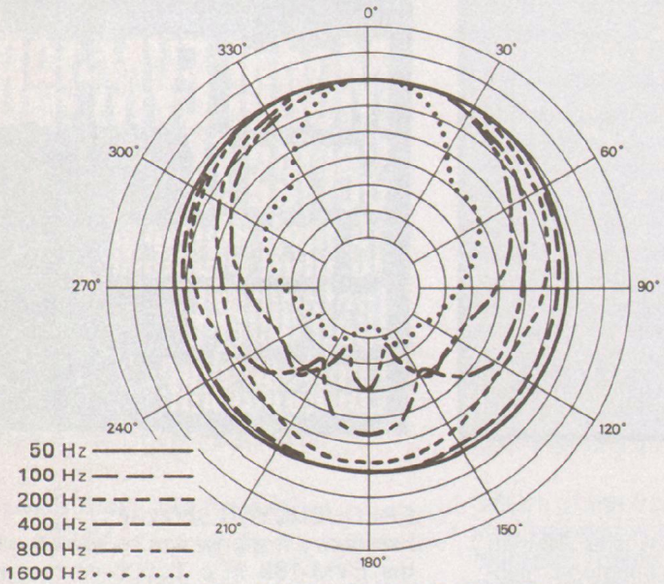

FIGURE 3 – TL505/EVM-18B Polar Response
4 V RMS of Octave Band Limited Pink Noise in Anechoic Environment, 10 ft on Axis in Horizontal Plane (5 dB per Division)

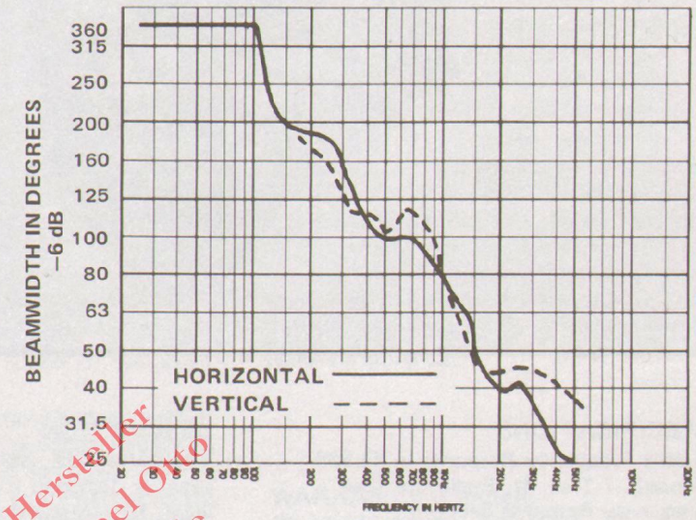

FIGURE 4
TL505/EVM-18B Beamwidth vs. Frequency

© beim Hersteller
Archiv Michael Otto
HiFi-Classic.de

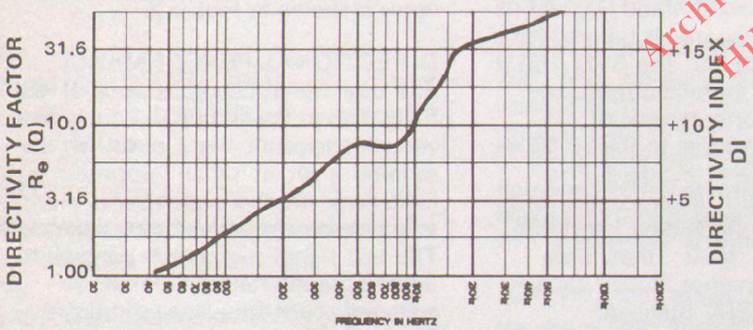

FIGURE 5
TL505/EVM-18B Directivity Factor and Directivity Index vs.. Frequency

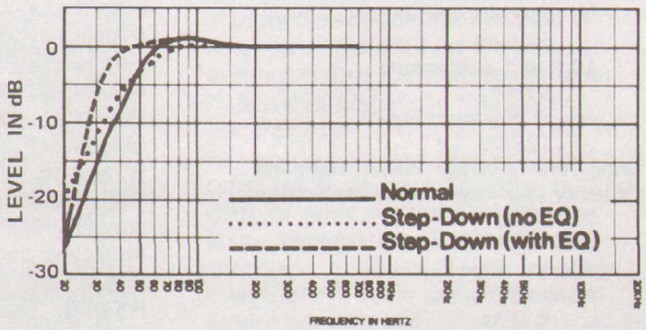

FIGURE 6
TL505/EVM-18B Low Frequency Response

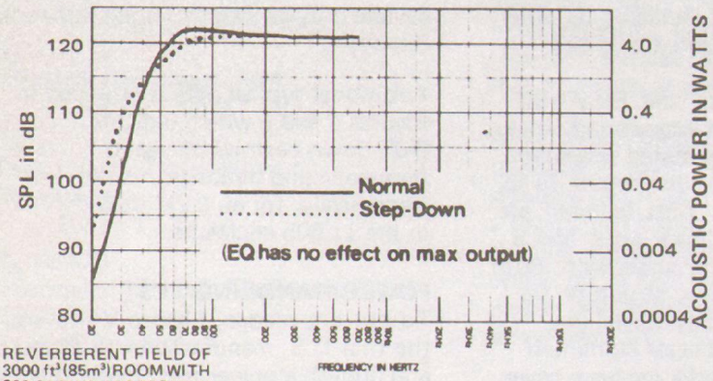

REVERBERENT FIELD OF 3000 ft³ (85m³) ROOM WITH 200 SABINS ABSORPTION (ROOM CONSTANT = 200)

FIGURE 7
TL505/EVM-18B Theoretical Low Frequency Maximum Acoustic Output vs. Frequency

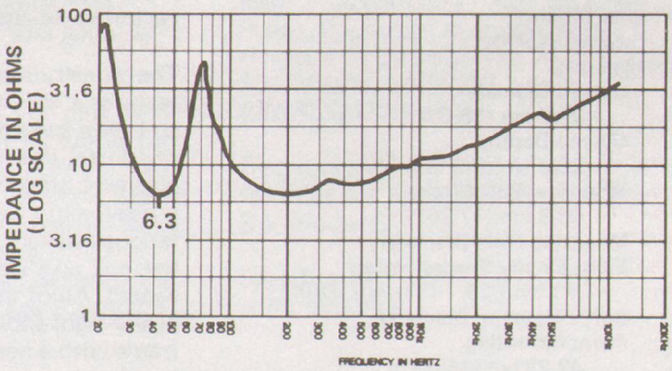

FIGURE 8
TL505/EVM-18B Input Impedance vs. Frequency

and low frequencies than typical actual program, adding an extra measure of reliability. Third, the test signal includes not only the overall "long-term average" or "continuous" level – which our ears interpret as loudness – but also short-duration peaks which are many times higher than the average, just like actual program. The long-term average level stresses the speaker thermally (heat). The instantaneous peaks test mechanical reliability (cone and diaphragm excursion). Note that the sine wave test signals sometimes used have a much less demanding peak value relative to their average level. In actual use, long-term average levels exist from several seconds on up, but we apply the long-term average for several hours, adding another extra measure of reliability.

Specifically, the EVM•18B is designed to withstand the power test described in EIA Standard RS-426. The EIA test spectrum is applied for eight hours. To obtain the spectrum, the output of a white noise generator (white noise is a particular type of random noise with equal energy per bandwidth in Hz) is fed to a shaping filter with 6-dB-per octave slopes below 40 Hz and above 318 Hz. When measured with the usual constant-percentage bandwidth analyzer (one-third octave), this shaping filter produces a spectrum whose 3-dB-down points are at 100 Hz and 1200 Hz with a 3-dB-per octave slope above 1200 Hz. This shaped signal is sent to the power amplifier with the continuous power set at 200 watts into the 5.6 ohms EIA equivalent impedance, (33.5 volts true RMS). Amplifier clipping sets instantaneous peaks at 9 dB above the continuous power, or 1600 watts peak (98.0 volts peak). This procedure provides a rigorous test of both thermal and mechanical failure modes.

RECOMMENDED ENCLOSURES

Replacement Use in Existing Enclosures

The EVM•18B will often be used to replace inferior speakers in existing enclosures. Mechanical and electrical characteristics are such that the superior efficiency, sound quality, and reliability of the EVM•18B will be realized in virtually any sealed, vented (bass reflex), horn, or open-backed enclosure.

Vented Enclosures

The most extended, lowest distortion, and best controlled bass performance is usually realized in properly designed vented enclosures. In such designs, the vent, or port actually reproduces the lowest octave or so of bass response. The vent is driven to full acoustic output by a relatively small motion of the speaker cone itself, acting through the air contained within the enclosure. The excursion of the EVM•18B at these frequencies is much reduced compared to sealed or open-backed enclosures, directly reducing harmonic distortion and the possibility of speaker "bottoming."

The 7.1 cubic feet TL505 enclosure has a low-frequency 3 dB-down point (f_3) of 48 Hz, ideal for many musical instrument and vocal reinforcement situations. For the lowest notes of the bass guitar, this response offers stronger output than usual, an effect of interest to certain bass players. Relative to a sealed system of similar output ability, the box tuning of 45 Hz reduces cone excursion over a usefully wide frequency range of 45 Hz to over 150 Hz.

Bass players may also like the sound of the TL505 in the "step-down" mode, achieved by partially covering the vent to lower box tuning to 33 Hz. This provides somewhat more output at the lowest tones (40 Hz) and somewhat less output in the octave above (80 Hz), while still maintaining good protection against speaker bottoming. With appropriate electronic boost, response may be extended to the lowest audible frequency range (f_3 = 34 Hz). This response is particularly appropriate for keyboard instruments with substantial low-bass content (synthesizers, organs) and high-output sub-woofer applications such as disco.

© beim Hersteller
Archiv Michael Otto
HiFi-Classic.de

Figure 6 shows small-signal total acoustic power output vs. frequency for the TL505/EVM•18B. In addition, Figure 7 shows the maximum acoustic power output versus frequency. The maximum output is limited by either (1) the thermal power handling capacity of the speaker, or (2) the speaker's maximum linear cone excursion capabilities, whichever occurs first. Note that some 2 to 3 dB of maximum output in the 55 to 80 Hz range is sacrificed when the step-down mode is used.

Details on TL505 design, construction, and equalization may be obtained from Electro-Voice by requesting "TL505 Builders Plans," Form 1596-523. Multiple TL505's may also be constructed. For example, a dual TL505 would have twice the internal volume of a single TL505, with the vent area doubled and vent length unchanged. The vent area may be either all-in-one or split into two or more separate vents, as long as the total vent area remains the same.

SPECIAL NOTE ON LOW-FREQUENCY PERFORMANCE

The TL505 vented enclosure and associated performance specifications shown earlier were determined in accordance with the definitive analysis

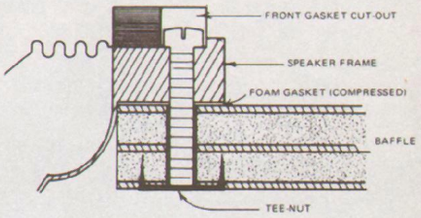

FIGURE 9
Front Mounting Detail
(Not to scale)

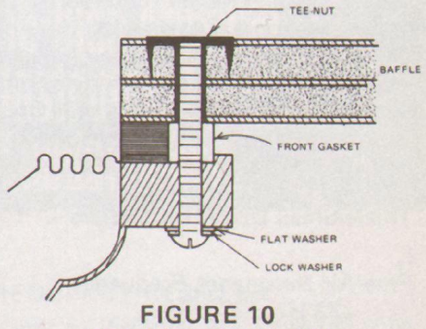

FIGURE 10
Rear Mounting Detail
(Not to scale)

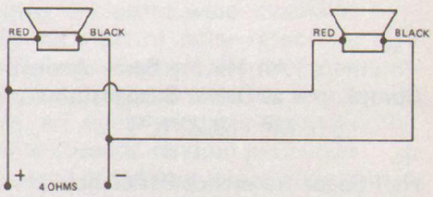

FIGURE 11
Connection of 2 EVM•18B Speakers in Parallel

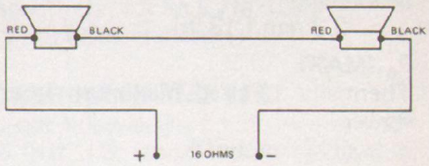

FIGURE 12
Connection of 2 EVM•18B Speakers in Series

of A. N. Thiele, R. H. Small, and others (for example, see A. N. Thiele, "Loudspeakers in Vented Boxes," *J. Audio Eng. Soc.*, Part I, vol. 19, May 1971, pp. 382-391; Part II, vol. 19, June 1971, pp. 471-483). Other vented box sizes and tunings are quite feasible and may give performance more suitable for a particular application.

By applying the work of Thiele and Small, Electro-Voice engineers developed a computer program which easily, quickly, and accurately predicts the performance of any speaker-box combination in the frequency range where the diaphragm is acting as a simple piston. The Thiele-Small Driver Parameters shown below include the speaker characteristics required by the computer program to develop the small and large signal performance of a given speaker and enclosure combination. Technically advanced users will find these parameters useful in the design of vented enclosures for the EVM•18B.

Thiele-Small Driver Parameters,

f_s
Free-Air Resonance Frequency
33 Hz

Q_{es}
Electro-Magnetic Q at f_s
.376

Q_{ms}
Mechanical Q at f_s
8.37

Q_{ts}
Total Q at f_s $\frac{(Q_{es}\,Q_{ms})}{(Q_{es} + Q_{ms})}$
.360

V_{as}
Volume of Air Having Same Acoustic Compliance as Driver Suspension
.516 M^3 (18.22 ft^3)

η_o
Half-Space Reference Efficiency
4%

V_d
Peak Displacement Volume of Diaphragm ($=S_d \times X_{max}$)
376.2 cm^3 (22.95 in^3)

S_d
Effective Diaphragm Area
1140 cm^2 (176.7 in^2)

X_{max}
Peak Linear Displacement of Diaphragm
3.3 mm (.13 in)

P_e (MAX)
Thermally Limited Maximum Input Power
200 watts EIA

R_e
DC Resistance of Voice Coil
5.2 ohms ± 10%

INSTALLATION

The EVM•18B may be front-or-rear-mounted, although front mounting is preferred because of convenience. For simple front mounting, the convenient SMH-1 mounting accessory is recommended. Complete mounting instructions are included with the SMH-1. Instructions for standard front mounting are given below. It is important that recommended baffle openings and mounting hole locations be followed.

Front Mounting requires a 16.625" diameter cutout and a 17.375" bolt circle. Mark baffle opening and screw locations on the blank panel first. Drill the screw holes before cutting the large baffle opening. If 1/4-20 screws are used, four screws are sufficient for secure mounting of the speaker. T-Nuts are recommended for simple, secure mounting. If T-Nuts are used, the holes should be 9/32" diameter (letter L drill). Apply glue to the flanges of 1/4-20 long shank T-Nuts before driving into the rear of the holes.

Sealing of the front-mounted speaker is accomplished with the adhesive-backed foam gasket segments. Strip off protective paper and apply gasket to the rear mounting surface of the speaker rim, making certain that holes in the gasket line up with the mounting holes in the speaker frame.

Length of the 1/4-20 screws should be 1/2" plus the panel thickness when using T-Nuts. The screws must have fillister heads to seat down in the recess of the speaker frame. Screws should be tightened evenly and securely. Maximum torque possible with a proper size screwdriver should be sufficient.

IMPORTANT! **When front mounting, the screw head must fit down into the front gasket cutout. See Figure 9.**

Rear Mounting requires the same diameter cutout and screw circle as front mounting. Other comments regarding the use of T-Nuts apply to rear mounting as well.

Screw length should be 3/4" plus panel thickness if using T-Nuts — longer for standard hex nuts. If hex nuts are used, a second nut should be tightened against the first nut to prevent loosening during operation. A lock washer and flat washer are recommended between the screw head and frame. See Figure 10.

Screws should be tightened evenly, but not excessively. Maximum torque possible with a proper size screwdriver should be sufficient. Do not use adhesive-back gasket segments for rear mounting.

If a cabinet is to be constructed from scratch, 3/4-inch solid and jointed or marine plywood is recommended. After construction, be certain interior is completely free of metal filings, wood chips, etc.

CONNECTIONS

Use No. 18 or larger stranded wire to connect the two terminals on the loudspeaker to the amplifier output. If a choice of amplifier output impedance is available (4, 8, 16 ohms), a single EVM•18B speaker should be connected to the 8-ohm tap. Two EVM•18B speakers may be connected in parallel as shown in Figure 11. Be sure to connect the red terminals together as shown in Figure 4. If series wiring is desired, wiring and polarity should follow Figure 12.

© bein Mitglieder Archiv Michael Otto HiFi-Classic

WARRANTY (Limited)—

Electro-Voice Loudspeakers and accessories are guaranteed for five years from date of original purchase against malfunction due to defects in workmanship and materials. If such malfunction occurs, unit will be repaired or replaced (at our option) without charge for materials or labor if delivered prepaid to the proper Electro-Voice service facility. Unit will be returned prepaid. Warranty does not cover finish, appearance items, burned coils, or other malfunction due to abuse or operation at other than specified conditions. Repair by other than Electro-Voice or its authorized service agencies will void this guarantee.

For repair information and service locations, please write: Service Department, Electro-Voice, Inc., 600 Cecil Street, Buchanan, Michigan 49107 (Phone 616/695-6831) or 7473 Avenue 304, Visalia, CA 93277 (209/625-1330,-1).

Electro-Voice also maintains complete facilities for non-warranty service of E-V products.

Specifications subject to change without notice.

Part Number 53975 — 042