KODAK INSTAMATIC REFLEX CAMERA

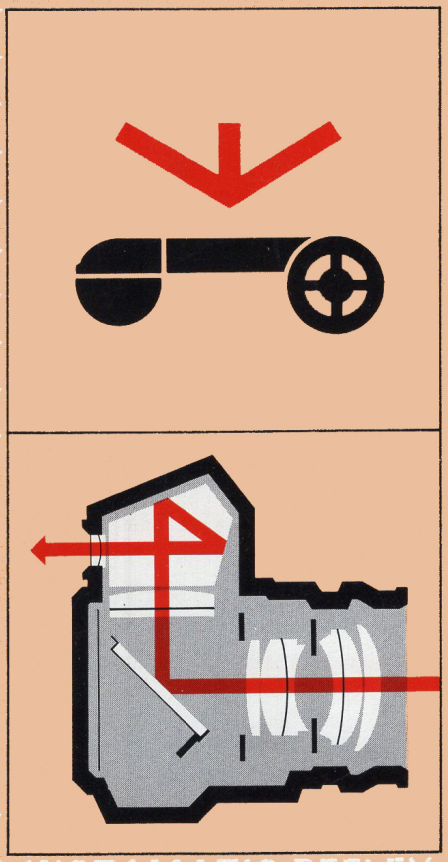

Kodak Instamatic® Reflex Camera

...does simply everything, and everything simply

KODAK INSTAMATIC Reflex Camera...

Available with

- **Xenar lens, 45mm *f*/2.8 or**
- **Xenon lens, 50mm *f*/1.9 or**
- **without lens**

■ combines for your picture-taking enjoyment the precision and versatility of a fine single-lens reflex camera with instant drop-in loading—all in an INSTAMATIC Camera that offers unequaled ease of use.

■ provides, should you be a serious photographer, a challenging instrument of practically unlimited picture-taking scope because of the camera's enormous shutter-speed range, its extra-sensitive CdS exposure-control system, the availability of a wide range of interchangeable lenses and other useful photo aids.

■ gives, should your photographic interest be more casual, exceptionally good pictures with just *two simple settings* —subject distance and lens opening. In addition, the camera offers you tremendous potential scope as your interest in picture-taking grows.

■ gives you lots of picture-taking fun and years of reliable performance.

■ represents the very latest in technical progress and in quiet, elegant appearance . . . it is a precision instrument you can own with justifiable pride.

See the KODAK INSTAMATIC Reflex Camera which

does simply everything, and everything simply

at your Kodak dealer's soon.

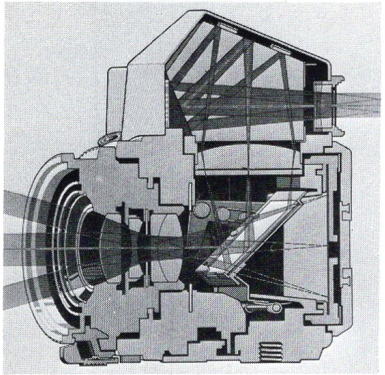

You get what you see *parallax-free*

with all lenses. The through-the-lens, pentaprism eye-level viewfinder gives you nearly life-size finder images with the two standard lenses. Instant return mirror too—no "after exposure" blackout.

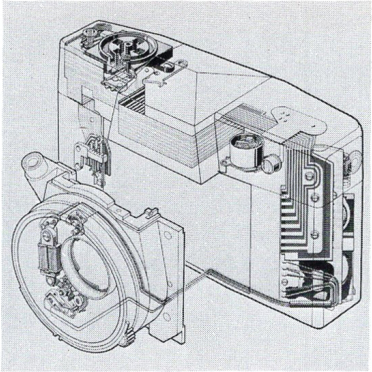

Electronic shutter with an enormous speed range

gives you automatically timed exposures—*from 1/500 second up to 20 seconds.* The 1/30 to 20-second range opens up new worlds of low-light picture-taking—early morning, late evening, dim interiors, in dark shade, even moonlit scenes.

You get correctly exposed pictures *automatically*

with the CdS exposure system. All you do is select the lens opening and the CdS cell, capacitor, and transistors compute and control the shutter speed *automatically* during exposure...when it really counts.

Features that give you outstanding *picture-taking scope*

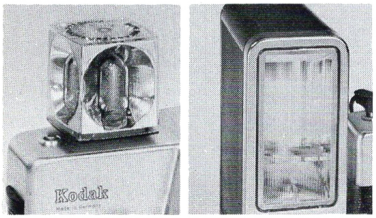

Uses compact flashcube

The camera accepts a flashcube which rotates as the film is advanced. Cube insertion automatically changes shutter speed for flash.

Electronic flash, too

There is an outlet for an auxiliary electronic flash unit. Connector insertion changes shutter speed for flash.

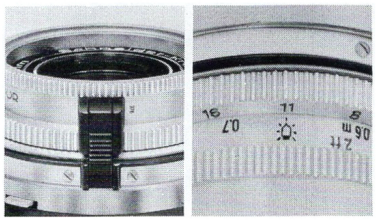

Flash exposure control

with the 45mm lens:
Focus-linked flash exposure control provides correct lens opening setting as you focus.

Flash exposure indication

with the 50mm lens:
After focusing, the proper *f*/setting is indicated on the lens mount.

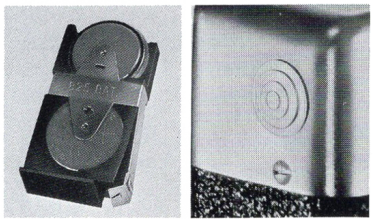

Dependable, long-life batteries

Two PX-825-size batteries are supplied. They power exposure/shutter control and flashcubes. Power is only on when the shutter is set.

Batteries still okay?

At the touch of a button, the battery checker gives you the answer in the viewfinder.

All you need to know *at a glance*

The bright finder is the control center. It lets you select the best possible view and check the shutter speed. Lets you control the focus setting — either by optical rangefinder, or ground glass with light-gathering Fresnel lens. With all lenses, even close-up lenses.

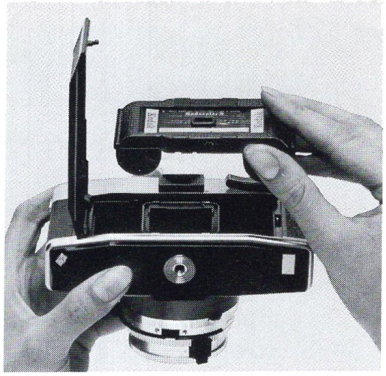

Enjoy instant, error-free loading ease

The 126 film cartridge lets you load and unload instantly—no fumbling. It gives you automatic exposure counting and film-load identification. The cartridge even sets the CdS exposure control for the speed of the film (ASA 64/80/125 and 160).

—exceptional *picture-taking ease.*

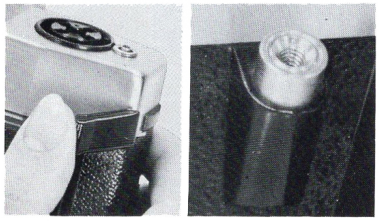

You are always ready

for your next picture. A single stroke of a lever advances the film. Four pictures, even flash, in 5 seconds, if you wish.

Convenient shutter release

substantial, and angled for easy reach. Interlock prevents double exposures.

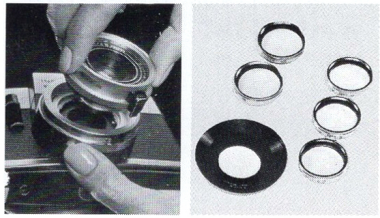

Easy lens interchange

Choice of two wide-angle and three telephoto lenses.
For details see next page.

Other photo aids

for fascinating ultra close-ups. Also cases, and other photo aids. See back cover.

AND ALL THIS TOO.

You get three kinds of pictures:

Color prints with KODACOLOR-X Film.

Color slides with KODACHROME-X, KODAK EKTACHROME-X, and High Speed EKTACHROME (Daylight Type) Films.

Black-and-white prints with KODAK VERICHROME Pan and KODAK TRI-X Pan Films.

Film Format: 28 x 28mm.

Additional "fixed" shutter speeds:

You get automatically controlled shutter speeds from 1/500 up to 20 seconds—also

1/30 second with flashcube in place,

1/300 second with connector for electronic flash in socket, and

1/500 second with batteries removed.

Manual shutter closing for extra-long exposures.

Other advantages:

Weather symbols ("sun" and "cloud") let you quickly preset lens opening for most daylight picture-taking conditions.

Focusing and depth-of-field scales.

Minimum lens openings—*f*/22.

Full and one-third opening click stops.

Depth-of-field previewing before the film is advanced.

Tripod and alignment sockets in base of camera.

Sturdy construction:

Body—aluminum die casting.

Top housing—brass alloy.

Finish—chrome and black, textured and scuff-resistant covering.

Compact size:

f/2.8—5¼ x 3¾ x 3 inches.

f/1.9—5¼ x 3¾ x 3½ inches.

Lightweight:

f/2.8—26 ounces.

f/1.9—30 ounces.

WIDE CHOICE OF INTERCHANGEABLE LENSES.

Add a new dimension to your picture-taking with one or several of these fine interchangeable lenses. Wide-angle lenses take in more subject matter and are especially useful in close quarters. A medium telephoto lens, such as the 85mm, helps eliminate undesirable surroundings—provides more pleasing close-ups of people. Longer telephoto lenses bring in distant subjects. They are especially useful for sport, scenic, and wildlife pictures.

All lenses have quick-change bayonet mounts, automatic diaphragms, and field-depth indication. They are color-corrected and coated, and couple automatically with the controls in the camera's viewfinder.

These lenses (each supplied in storage case) also fit the KODAK RETINA Reflex Camera. Lenses and their attachments for the RETINA Reflex Camera work with the KODAK INSTAMATIC Reflex Camera.

28mm wide-angle lens

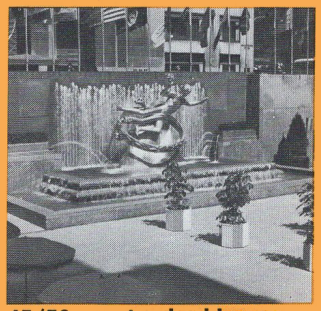

45/50mm standard lenses

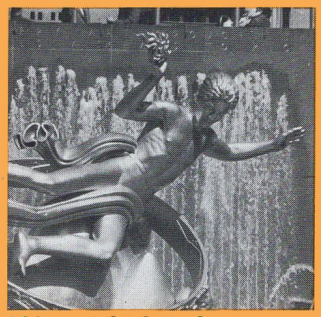

200mm telephoto lens

Standard Lenses

Fast Xenar Lens, 45mm f/2.8—4 elements. Focusing range: 3.3 feet to "Inf." Focus-linked flash exposure control. Angle of view 31°.

Ultrafast Xenon Lens, 50mm f/1.9—6 elements. Focusing range: 2 feet to "Inf." Flash exposure indication. Angle of view 29°.

Wide-angle Lenses

KODAK RETINA Curtagon Lens, 28mm f/4—Extreme wide-angle. 7 elements. Focusing range: 3 feet to "Inf." Angle of view 50°.

KODAK RETINA Curtagon Lens, 35mm f/2.8—Moderate wide-angle. 5 elements. Focusing range: 3 feet to "Inf." Angle of view 40°.

Telephoto Lenses

KODAK RETINA Tele-Arton Lens, 85mm f/4—5 elements. Focusing range: 6 feet to "Inf." Angle of view 19°.

KODAK RETINA Tele-Xenar Lens, 135mm f/4—5 elements. Focusing range: 14 feet to "Inf." Angle of view 11°.

KODAK RETINA Tele-Xenar 200mm f/4.8 Lens Kit. 7 elements. Focusing range: 28 feet to "Inf." Angle of view 8°.

Fascinating Ultra Close-ups are a Cinch with the KODAK INSTAMATIC Reflex Camera

. . . and they tell your picture story with a special impact. The close-up devices below open up progressively greater parts of a new world of close-range pictures—from small subjects such as flowers, insects, jewels, to revealing photomicrographs. And all devices are so easy to use—practically all camera controls work with them.

Camera Stand Kit; camera with lens spacer

KODAK RETINA Close-up Lens Set, Type N/32. Two lenses with 29.5mm screw-in mounts, coated. For pictures as close as 15 inches.

KODAK RETINA Close-up Lens Set, Type R. Three lenses with 29.5mm screw-in mounts, coated. For pictures as close as 7 inches.

KODAK INSTAMATIC Reflex Lens Spacer. Fits between camera and any one of the lenses. With 45 and 50mm lenses it makes about 2:1 scale pictures.

KODAK INSTAMATIC Reflex Microscope Adapter. For doctors, students, laboratories. Problem-free automatic exposure control. Fits most microscopes with 25mm eyepiece diameter.

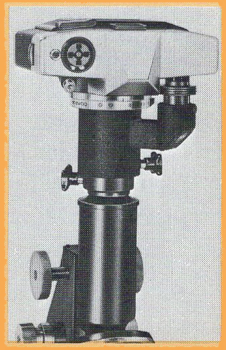

...and other useful photo aids.

KODAK INSTAMATIC Reflex Field Case
Fits both models. Adjustable neckstrap. Permits loading camera while in case. Removable front.

KODAK RETINA Fitted Case, Model C
For three lenses (28mm to 135mm) and photo aids.

KODAK RETINA Right-Angle Finder
For low-angle and "around-the-corner" views; also copying. Supplied with adapter in carrying case.

KODAK INSTAMATIC Reflex Camera Stand Kit
Provides a solid support for long exposures. Comes with swivel head and a rigid angle bracket for copying. Demountable for easy carrying and storing.

KODAK INSTAMATIC Reflex Step-Down Ring 52/29.5mm
Permits using N- and R-type Close-up Lenses with 50mm *f/1.9* Xenon Lens.

KODAK Flashcube Extender
Increases the distance between lens and flashcube for more pleasing pictures, especially close-ups of people.

KODAK RETINA Tele-Auxiliary Lenses
Screw-in type. Coated.
TI/32—fits 85mm lens for 6 to 3¼ feet focusing.
TII/60—fits 135mm lens for 12¼ to 6½ feet, and
TI/60—for 6½ to 4¾ feet focusing.

KODAK RETINA Lens Hoods
32—for 35mm, 45mm, and 85mm lenses. Flexible. Screw-in type.
135—for 135mm lens. Rigid. Slip-on type.

KODAK, INSTAMATIC, KODACHROME, KODACOLOR, VERICHROME, TRI-X, EKTACHROME, and RETINA are trademarks.

1/69 PRINTED IN U.S.A.